DSA

140

APPLICATION FOR SUBMITTAL OF POST-APPROVAL DOCUMENT

This application is for submittal of documents, after the initial approval of the project (post-approval documents), that require Division of the State Architect (DSA) review and approval.This form shall be completed by the Design Professional in General Responsible Charge of the project, in accordance with California Code of Regulations, Title 24, Part 1, Sections 4-317, 4-323 and 4-338 and in compliance with DSA IR A-6: Construction Change Document Submittal and Approval Process.

1. SUBMITTAL TYPE (Is this a resubmittal? Yes ☐ No ☒)

Deferred Submittal ☐	Addendum Number: 1	Revision Number:	CCD Number:

2. PROJECT INFORMATION

School District/Owner: Bakersfield City School District	DSA File Number: 15-6	Increment Number: 12
Project Name/School:	DSA Application Number: 03-126207	

3. APPLICANT INFORMATION

Date Submitted: 10/30/26	Attached Pages? No ☐ Yes ☒ Number of attached pages?		
Firm Name: Integrated Designs by SOMAM Inc.	Contact Name: Sean K Parker		
Work Email: sparker@somam.com	Work Phone: (559) 436-0881		
Firm Address: 6011 N. First Street suite 130	City: Fresno	State: CA	Zip Code: 93710

4. REASON FOR SUBMITTAL (Check applicable boxes)

☒ For revision or addendum prior to construction.	☐ For a project currently under construction.

☐ For a project that has a form *DSA 301-N: Notification of Requirement for Certification* or *DSA 301-P: Posted Notification of Requirement for Certification* issued.

☐ To obtain DSA approval of an existing uncertified building or buildings.

5. DESIGN PROFESSIONAL IN GENERAL RESPONSIBLE CHARGE

Name of the Design Professional In General Responsible Charge: Curtis E. Flynn

Professional License Number: C 28966	Discipline: Architect

Statement: The attached post-approval documents have been examined by me for design intent and coordinated with the design documents. They are found to be in general conformance with the design and appear to meet the appropriate requirements of Title 24, California Code of Regulations and the project specifications. They are acceptable for incorporation into the construction of the project. This Statement shall not be construed as relieving me of my rights, duties, and responsibilities under Section 17302 and 81138 of the Education Code and Sections 4-336, 4-341 and 4-344 of Title 24, Part 1.

Signature: _____

DESIGN PROFESSIONAL IN GENERAL RESPONSIBLE CHARGE

6. CONFIRMATION, DESCRIPTION AND LISTING OF DOCUMENTS

For addenda, revisions, or CCDs: CHECK THIS BOX ☐ to confirm that *all* post-approval documents have been stamped and signed by the Responsible Design Professional listed on form *DSA 1: Application for Approval of Plans and Specifications* for this project. (For *Deferred Submittals*, refer to *IR A-18: Use of Construction Documents Prepared by Other Professionals,* and *IR A-19: Design Professional's Signature and Seal (Stamp) on Construction Documents*, when applicable, for signature and seal requirements.)

Provide a brief description of construction scope for this post-approval document (attach additional sheets if needed):

coordination between sheets, revision to demonstrate responsibility of work, removal of non-applicable detail & revision to others for sidewalk reinforcement & gate swing.

List of DSA-approved drawings affected by this post-approval document:

C1.3, C1.4, C1.5, A1.00, A1.02, A1.03, A1.04, A1.05, E1.01, E1.04

DSA USE ONLY

SSS_____Date_____ ☐Approved ☐Disapproved ☐Not Required

Comments:_____

FLS_____Date_____ ☐Approved ☐Disapproved ☐Not Required

Comments:_____

ACS_____Date_____ ☐Approved ☐Disapproved ☐Not Required

Comments:_____

Returned	DSA STAMP
Date:	
By:	

ADDENDUM NO. 1

PROJECT MANUAL

CESAR CHAVEZ ELEMENTARY SCHOOL
7 RELOCATABLE CLASSROOMS
& 1 RELOCATABLE TOILET BLDG
BAKERSFIELD CITY SCHOOL DISTRICT

Project No.: 5682.1
DSA File No. 15-6
DSA App No. 03-126207
October 29 2026







This Addendum and Addendum drawings form a part of the Contract Documents. It modifies the original Project Manual and Drawings. Bidders are required to acknowledge receipt of this Addendum in the space provided in the Bid Form. Failure to acknowledge receipt of each addendum may subject bidder to disqualification.

DRAWINGS

CIVIL

1-01 **SHEET C1.3 – GRADING PLAN PATH OF TRAVEL AND RESTROOM BLDG:** Revise drawing C1.3, note clouded areas and deltas for changes.

1-02 **SHEET C1.5 – GRADING PLAN 4 CLASSROOM BLDGS:** Revise drawing C1.5, note clouded areas and deltas for changes.

ARCHITECUTURAL

1-03 **SHEET A1.00 – FIRE AUTHORITY SITE PLAN:** Revise drawing A1.00, note clouded areas and deltas for changes.

1-04 **SHEET A1.02 – ENLARGED DEMOLITION SITE PLAN:** Revise drawing a1.02, note clouded areas and deltas for changes.

1-05 **SHEET A1.03 – ENLARGED SITE PLAN:** Revise drawing A1.03, note clouded areas and deltas for changes.

1-06 **SHEET A1.04 – SITE DETAILS:** Revise drawing A1.04, note clouded areas and deltas for changes.

1-07 **SHEET A1.05 – SITE DETAILS:** Revise drawing A1.05, note clouded areas and deltas for changes.

ELECTRICAL

1-08 **SHEET E1.01 – FIRE ALARM PLAN:** Revise drawing E1.01, note clouded areas and deltas for changes.

1-09 **SHEET E1.04 – F.A. SYSTEM DETAILS AND CALCS:** Revise drawing E1.04, note clouded areas and deltas for changes.

END ADDENDUM NO. 1

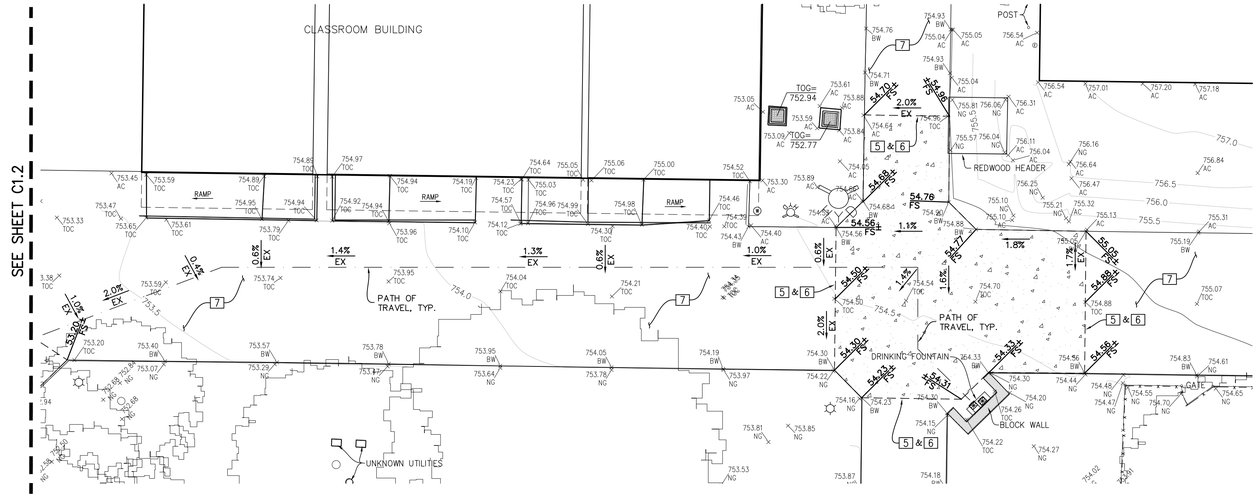

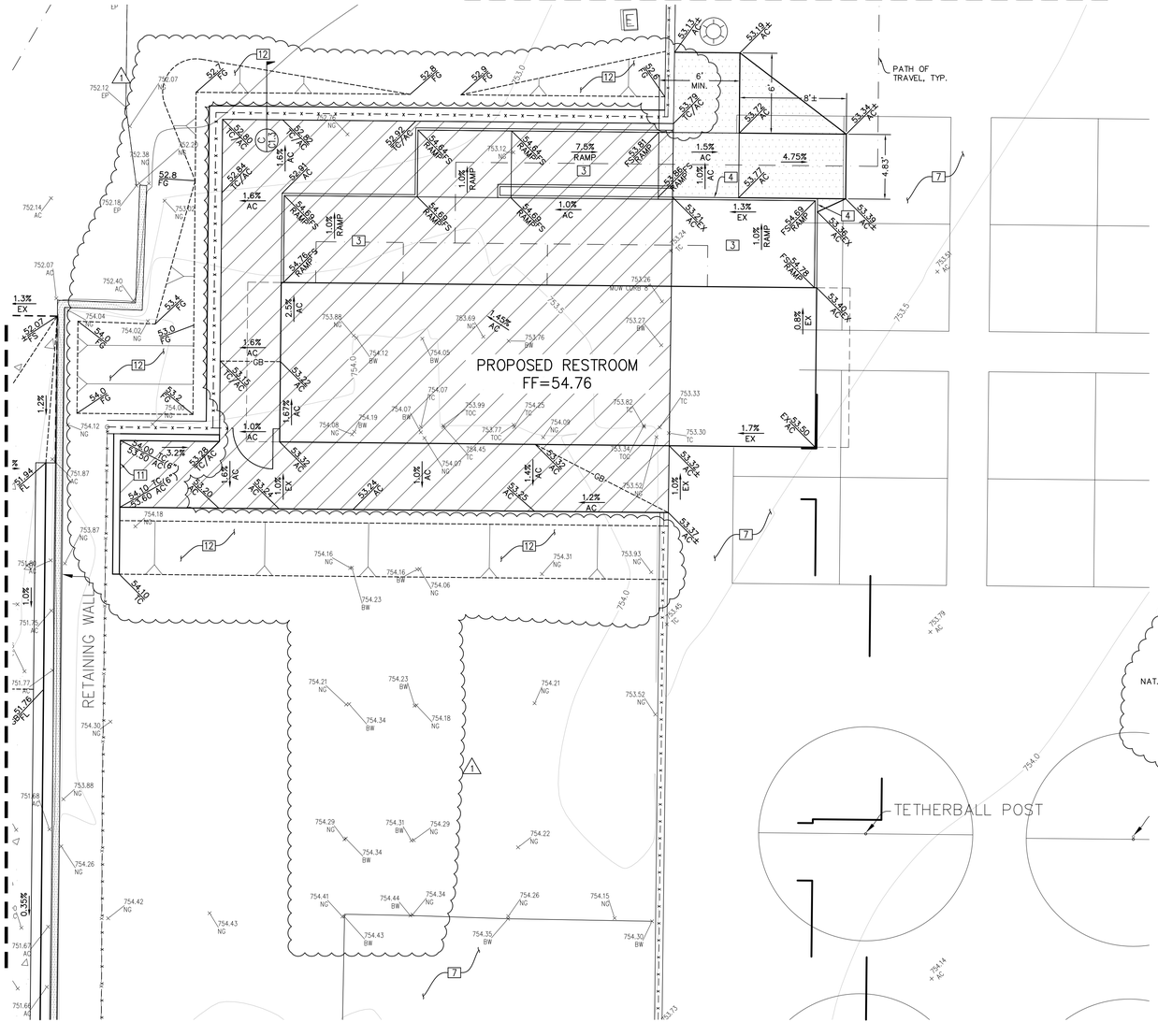

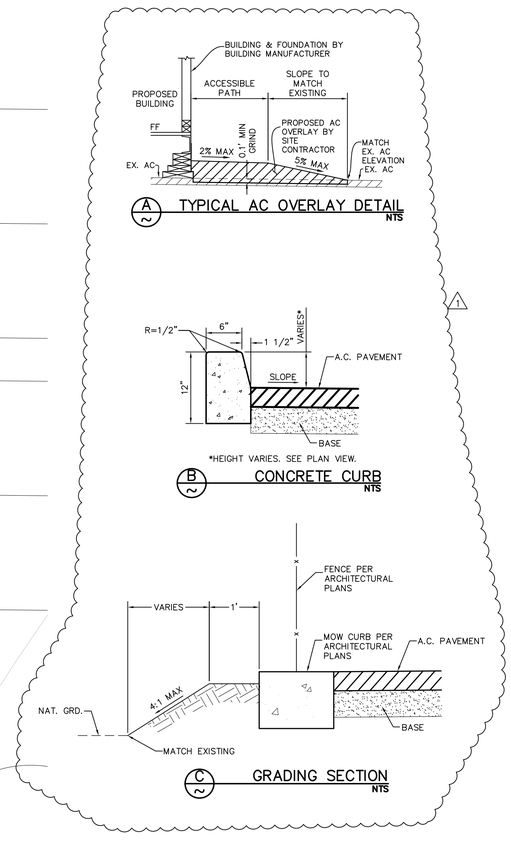

GRADING CONSTRUCTION NOTES

REMOVE EXISTING CONCRETE AND REPLACE MINIMUM 4" THICK CONCRETE WALK PER ARCHITECTURAL PLANS. COMPACT MINIMUM 6" OF SUB-GRADE TO 90% MAX DENSITY. PROVIDE MINIMUM 4' WIDE PATH OF TRAVEL WITH 2% CROSS SLOPE AND 5% SLOPE IN THE DIRECTION OF TRAVEL.

1. CONSTRUCT MINIMUM 4" THICK CONCRETE WALK PER ARCHITECTURAL PLANS. COMPACT MINIMUM 6" OF SUB-GRADE TO 90% MAX DENSITY.
2. CONSTRUCT 4' LONG ACCESSIBLE RAMP EXTENSION.
3. CONSTRUCT ACCESSIBLE RAMP PER BUILDING MANUFACTURER PLANS.
4. INSTALL GALVANIZED FLASHING PER DETAIL (A/C1.4).
5. SAWCUT TO NEAT, CLEAN VERTICAL FACE AT NEAREST CONTROL JOINT.
6. MATCH EXISTING SIDEWALK GRADE.
7. EXISTING ASPHALT OR CONCRETE TO REMAIN, PROTECT IN PLACE.
8. SAWCUT ASPHALT AND PATCH BACK WITH 3" MIN AC 12" OVER 4" MIN AGGREGATE BASE OVER MIN NAT. GRD. COMPACTED TO 90% MAX DENSITY.
9. CONSTRUCT 18" WIDE V-GUTTER PER DETAIL (A/C1.5).
10. FLARE GUTTER DEPRESSION.
11. CONSTRUCT CONCRETE CURB PER DETAIL (B/C1.3). HEIGHT VARIES, SEE PLAN VIEW.
12. RE-GRADE LANDSCAPING AS SHOWN.

GRADING CONSTRUCTION NOTES (THIS SHEET ONLY)

GRIND 0.1' MINIMUM EXISTING AC AND OVERLAY TO DESIGN GRADES SHOWN PER DETAIL (A/C1.3).

CONSTRUCT 3" MIN. AC OVER 4" MIN. CLASS II AGG. BASE OVER 1.0' MIN. NATURAL GROUND COMPACTED TO 90% MAX. DENSITY.

NOTES:

1. SEE ARCHITECTURAL SITE PLAN FOR ALL DIMENSIONS NOT SHOWN.
2. SEE ARCHITECTURAL PLANS FOR DEMOLITION PLAN.
3. CONTRACTOR SHALL PROTECT ALL EXISTING IMPROVEMENTS, UNDERGROUND UTILITIES, ETC. TO REMAIN IN PLACE AND SHALL REPAIR ANY DAMAGES DURING CONSTRUCTION ACTIVITIES.
4. EXISTING UTILITIES ARE SHOWN BASED ON AVAILABLE RECORDS PROVIDED BY OWNER.
5. CONTRACTOR SHALL VERIFY LOCATION AND DEPTHS OF UTILITIES PRIOR TO CONSTRUCTION AND NOTIFY ENGINEER OF ANY CONFLICTS.
6. COORDINATE IRRIGATION REMOVAL/RELOCATION WITH OWNER.

PORTER & ASSOCIATES, INC.
ENGINEERING & SURVEYING
4733 Centennial Plaza Way, Suite A
Bakersfield, California 93301
661.327.0362

Owner:

BAKERSFIELD CITY SCHOOL DISTRICT
1300 BAKER ST
BAKERSFIELD, CA 93305

Project Name:

7 RELOCATABLE CLASSROOMS & 1 RELOCATABLE TOILET BLDG

Project Address:

CESAR CHAVEZ ELEMENTARY SCHOOL
4201 MESA MARIN DR.
BAKERSFIELD, CA 93306

integrated designs
by SOMAM, Inc.

ARCHITECTURE
ENGINEERING
INTERIOR DESIGN

6011 N. FRESNO STREET, SUITE 130
FRESNO CALIFORNIA 93710
P:(559) 436-0881 F:(559) 436-0887
E: design@somam.com
integrateddesigns.com

Ownership of Documents
This document, the ideas and designs incorporated herein, as an instrument of Professional Service is the property of Integrated Designs by SOMAM Inc. and is not to be used, in whole or in part for any other project without written authorization.
© COPYRIGHT 2025

Stamp:

REGISTERED PROFESSIONAL ENGINEER
FRED W. PORTER II
RCE 74059
CIVIL
STATE OF CALIFORNIA

Sheet Title:

GRADING PLAN PATH OF TRAVEL & RESTROOM BLDG

Job No.: **5682.1**

Sheet No.: **C1.3**

Release: ADDENDUM 1 (1) 10/28/26

J:\3410\Grading Plan\Phase 1\dwg MATTHEW CARSON 10/29/26

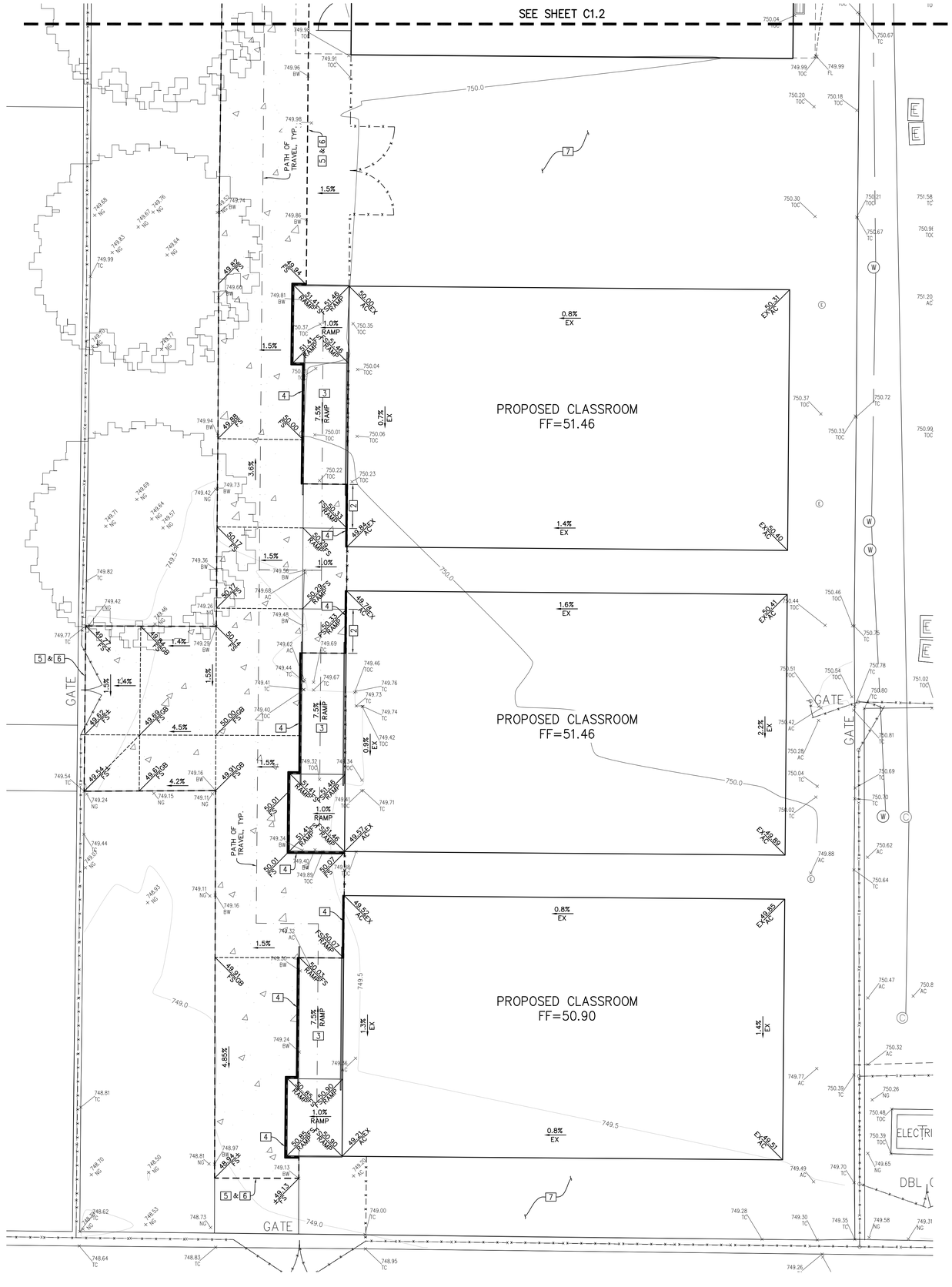

GRADING CONSTRUCTION NOTES

REMOVE EXISTING CONCRETE AND REPLACE MINIMUM 4" THICK CONCRETE WALK PER ARCHITECTURAL PLANS. COMPACT MINIMUM 6" OF SUB-GRADE TO 90% MAX DENSITY. PROVIDE MINIMUM 4' WIDE PATH OF TRAVEL WITH 2% CROSS SLOPE AND 5% SLOPE IN THE DIRECTION OF TRAVEL.

1. CONSTRUCT MINIMUM 4" THICK CONCRETE WALK PER ARCHITECTURAL PLANS. COMPACT MINIMUM 6" OF SUB-GRADE TO 90% MAX DENSITY.
2. CONSTRUCT 4' LONG ACCESSIBLE RAMP EXTENSION.
3. CONSTRUCT ACCESSIBLE RAMP PER BUILDING MANUFACTURER PLANS.
4. INSTALL GALVANIZED FLASHING PER DETAIL A/C1.4.
5. SAWCUT TO NEAT, CLEAN VERTICAL FACE AT NEAREST CONTROL JOINT.
6. MATCH EXISTING SIDEWALK GRADE.
7. EXISTING ASPHALT OR CONCRETE TO REMAIN, PROTECT IN PLACE.
8. SAWCUT ASPHALT AND PATCH BACK WITH 3" MIN AC 12" OVER 4" MIN AGGREGATE BASE OVER MIN NAT. GRD. COMPACTED TO 90% MAX DENSITY.
9. CONSTRUCT 18" WIDE V-GUTTER PER DETAIL A/C1.5.
10. FLARE GUTTER DEPRESSION.
11. CONSTRUCT CONCRETE CURB PER DETAIL B/C1.3. HEIGHT VARIES, SEE PLAN VIEW.
12. RE-GRADE LANDSCAPING AS SHOWN.

1

NOTES:

1. SEE ARCHITECTURAL SITE PLAN FOR ALL DIMENSIONS NOT SHOWN.
2. SEE ARCHITECTURAL PLANS FOR DEMOLITION PLAN.
3. CONTRACTOR SHALL PROTECT ALL EXISTING IMPROVEMENTS, UNDERGROUND UTILITIES, ETC. TO REMAIN IN PLACE AND SHALL REPAIR ANY DAMAGES DURING CONSTRUCTION ACTIVITIES.
4. EXISTING UTILITIES ARE SHOWN BASED ON AVAILABLE RECORDS PROVIDED BY OWNER.
5. CONTRACTOR SHALL VERIFY LOCATION AND DEPTHS OF UTILITIES PRIOR TO CONSTRUCTION AND NOTIFY ENGINEER OF ANY CONFLICTS.
6. COORDINATE IRRIGATION REMOVAL/RELOCATION WITH OWNER.

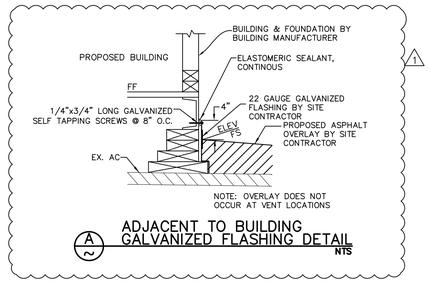

A/C1.4 ADJACENT TO BUILDING GALVANIZED FLASHING DETAIL
NTS

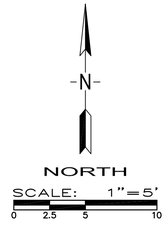

PORTER & ASSOCIATES, INC.
ENGINEERING & SURVEYING
4733 Centennial Plaza Way, Suite A
Bakersfield, California 93301
661.327.0362

J:\3410\Grading Plan\Phase 1\dwg MATTHEW CARSON 10/29/26

Owner:

BAKERSFIELD CITY SCHOOL DISTRICT
1300 BAKER ST
BAKERSFIELD, CA 93305

Project Name:

7 RELOCATABLE CLASSROOMS & 1 RELOCATABLE TOILET BLDG

Project Address:

CESAR CHAVEZ ELEMENTARY SCHOOL
4201 MESA MARIN DR.
BAKERSFIELD, CA 93306

integrated designs
by SOMAM, Inc.

ARCHITECTURE
ENGINEERING
INTERIOR DESIGN

6011 N. FRESNO STREET, SUITE 130
FRESNO CALIFORNIA 93710
P:(559) 436-0881 F:(559) 436-0887
E: design@somam.com
integrateddesigns.com

Ownership of Documents
This document, the ideas and designs incorporated herein, as an instrument of Professional Service is the property of Integrated Designs by SOMAM Inc. and is not to be used, in whole or in part for any other project without written authorization.
© COPYRIGHT 2025

Stamp:

REGISTERED PROFESSIONAL ENGINEER
FRED W. PORTER, III
RCE 74059
CIVIL
STATE OF CALIFORNIA

Sheet Title:

GRADING PLAN 3 CLASSROOM BLDGS

Job No.: **5682.1**

Sheet No.: **C1.4**

Release: ADDENDUM 1 (1) 10/28/26

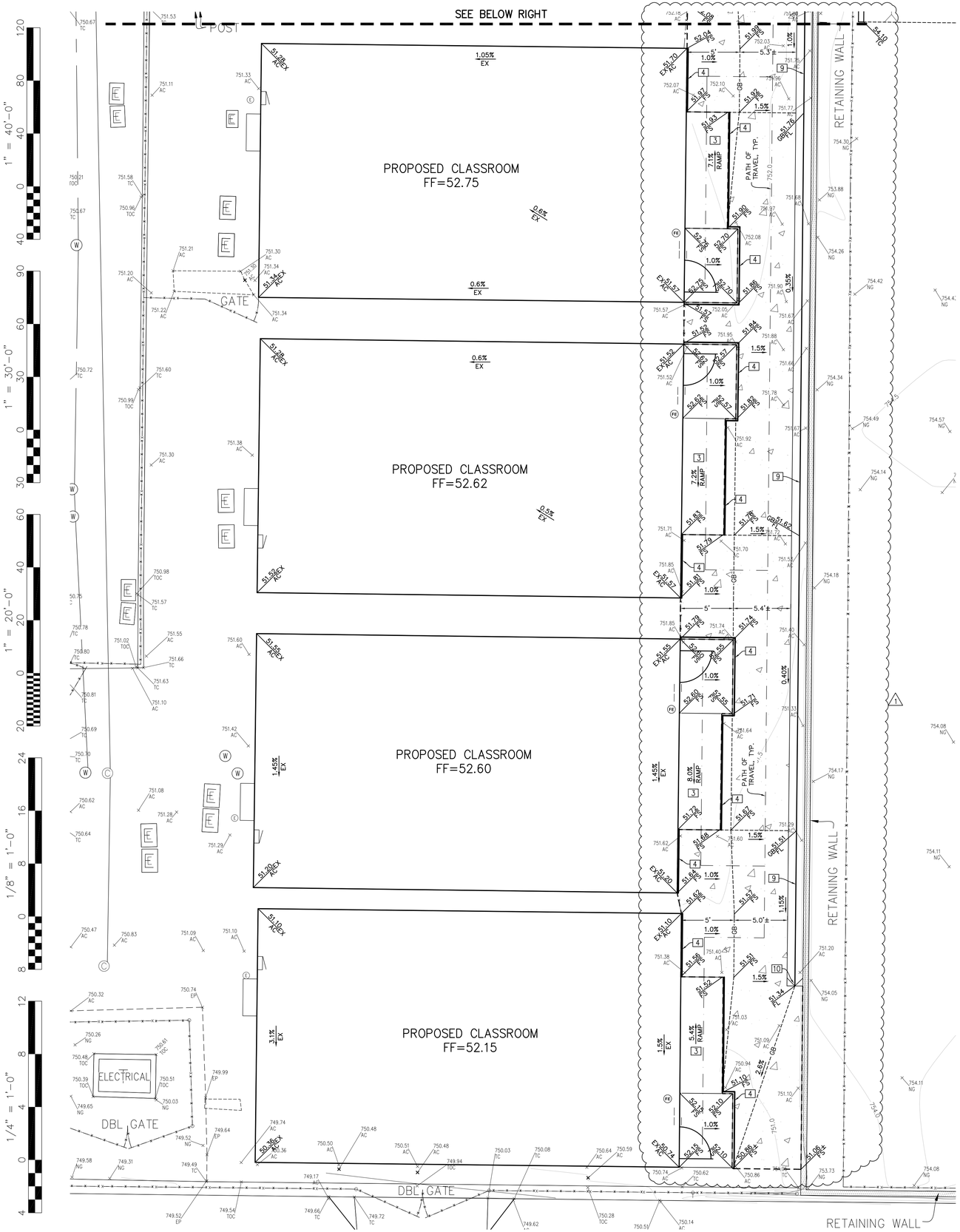

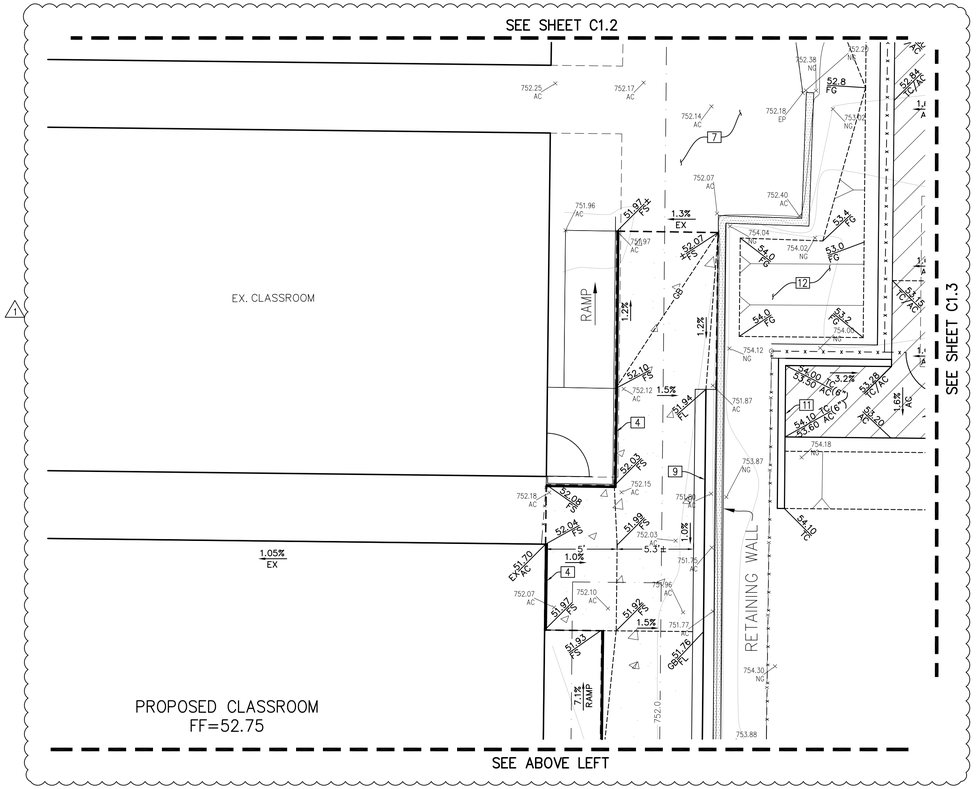

GRADING CONSTRUCTION NOTES

REMOVE EXISTING CONCRETE AND REPLACE MINIMUM 4" THICK CONCRETE WALK PER ARCHITECTURAL PLANS. COMPACT MINIMUM 6" OF SUB-GRADE TO 90% MAX DENSITY. PROVIDE MINIMUM 4' WIDE PATH OF TRAVEL WITH 2% CROSS SLOPE AND 5% SLOPE IN THE DIRECTION OF TRAVEL.

1. CONSTRUCT MINIMUM 4" THICK CONCRETE WALK PER ARCHITECTURAL PLANS. COMPACT MINIMUM 6" OF SUB-GRADE TO 90% MAX DENSITY.
2. CONSTRUCT 4' LONG ACCESSIBLE RAMP EXTENSION.
3. CONSTRUCT ACCESSIBLE RAMP PER BUILDING MANUFACTURER PLANS.
4. INSTALL GALVANIZED FLASHING PER DETAIL (A/C1.4).
5. SAWCUT TO NEAT, CLEAN VERTICAL FACE AT NEAREST CONTROL JOINT.
6. MATCH EXISTING SIDEWALK GRADE.
7. EXISTING ASPHALT OR CONCRETE TO REMAIN, PROTECT IN PLACE.
8. SAWCUT ASPHALT AND PATCH BACK WITH 3" MIN AC 12" OVER 4" MIN AGGREGATE BASE OVER MIN NAT. GRD. COMPACTED TO 90% MAX DENSITY.
9. CONSTRUCT 18" WIDE V-GUTTER PER DETAIL (A/C1.5).
10. FLARE GUTTER DEPRESSION.
11. CONSTRUCT CONCRETE CURB PER DETAIL (B/C1.3). HEIGHT VARIES, SEE PLAN VIEW.
12. RE-GRADE LANDSCAPING AS SHOWN.

NOTES:

1. SEE ARCHITECTURAL SITE PLAN FOR ALL DIMENSIONS NOT SHOWN.
2. SEE ARCHITECTURAL PLANS FOR DEMOLITION PLAN.
3. CONTRACTOR SHALL PROTECT ALL EXISTING IMPROVEMENTS, UNDERGROUND UTILITIES, ETC. TO REMAIN IN PLACE AND SHALL REPAIR ANY DAMAGES DURING CONSTRUCTION ACTIVITIES.
4. EXISTING UTILITIES ARE SHOWN BASED ON AVAILABLE RECORDS PROVIDED BY OWNER.
5. CONTRACTOR SHALL VERIFY LOCATION AND DEPTHS OF UTILITIES PRIOR TO CONSTRUCTION AND NOTIFY ENGINEER OF ANY CONFLICTS.
6. COORDINATE IRRIGATION REMOVAL/RELOCATION WITH OWNER.

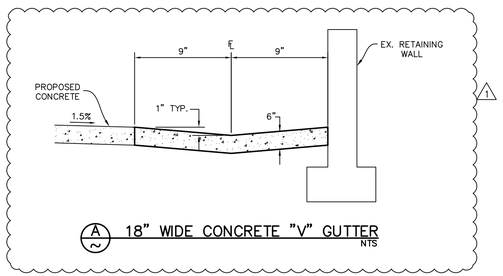

(A/~) 18" WIDE CONCRETE "V" GUTTER
NTS

NORTH
SCALE: 1"=5'
0 2.5 5 10

PORTER & ASSOCIATES, INC.
ENGINEERING & SURVEYING
4733 Centennial Plaza Way, Suite A
Bakersfield, California 93301
661.327.0362

Owner:

BAKERSFIELD CITY SCHOOL DISTRICT
1300 BAKER ST
BAKERSFIELD, CA 93305

Project Name:

7 RELOCATABLE CLASSROOMS & 1 RELOCATABLE TOILET BLDG

Project Address:

CESAR CHAVEZ ELEMENTARY SCHOOL
4201 MESA MARIN DR.
BAKERSFIELD, CA 93306

integrated designs
by SOMAM, Inc.

**ARCHITECTURE
ENGINEERING
INTERIOR DESIGN**

6011 N. FRESNO STREET, SUITE 130
FRESNO CALIFORNIA 93710
P:(559) 436-0881 F:(559) 436-0887
E: design@somam.com
integrateddesigns.com

Ownership of Documents
This document, the ideas and designs incorporated herein, as an instrument of Professional Service is the property of Integrated Designs by SOMAM Inc. and is not to be used, in whole or in part for any other project without written authorization.
© COPYRIGHT 2025

Stamp:

REGISTERED PROFESSIONAL ENGINEER
FRED W. PORTER II
RCE 74059
CIVIL
STATE OF CALIFORNIA

Sheet Title:

GRADING PLAN 4 CLASSROOM BLDGS

Job No.: **5682.1**

Sheet No.: **C1.5**

Release: ADDENDUM 1 (1) 10/28/26

J:\3410\Grading Plan\Phase 1\dwg MATTHEW CARSON 10/29/26

ACCESSIBILITY NOTES

THE PATH OF TRAVEL (P.O.T.) IDENTIFIED IN THESE CONSTRUCTION DOCUMENTS IS COMPLIANT WITH THE CURRENT APPLICABLE CALIFORNIA BUILDING CODE ACCESSIBILITY PROVISIONS FOR PATH OF TRAVEL REQUIREMENTS FOR ALTERATIONS, ADDITIONS AND STRUCTURAL REPAIRS. AS PART OF THE DESIGN OF THIS PROJECT, THE P.O.T. WAS EXAMINED AND ANY ELEMENTS, COMPONENTS OR PORTIONS OF THE P.O.T. THAT WERE DETERMINED TO BE NONCOMPLIANT 1) HAVE BEEN IDENTIFIED AND 2) THE CORRECTIVE WORK NECESSARY TO BRING THEM INTO COMPLIANCE HAS BEEN INCLUDED WITHIN THE SCOPE OF THIS PROJECT'S WORK THROUGH DETAILS, DRAWINGS AND SPECIFICATIONS INCORPORATED INTO THESE CONSTRUCTION DOCUMENTS. ANY NONCOMPLIANT ELEMENTS, COMPONENTS OR PORTIONS OF THE P.O.T. THAT WILL NOT BE CORRECTED BY THIS PROJECT BASED ON VALUATION THRESHOLD LIMITATIONS OR A FINDING OF UNREASONABLE HARDSHIP ARE SO INDICATED IN THESE CONSTRUCTION DOCUMENTS.

DURING CONSTRUCTION, IF P.O.T. ITEMS WITHIN THE SCOPE OF THE PROJECT REPRESENTED AS CODE COMPLIANT ARE FOUND TO BE NONCONFORMING BEYOND REASONABLE CONSTRUCTION TOLERANCES, THEY SHALL BE BROUGHT INTO COMPLIANCE WITH THE CBC AS A PART OF THIS PROJECT BY MEANS OF A CONSTRUCTION CHANGE DOCUMENT.

Path of Travel, Technical Requirements for Accessible Route

- "ACCESSIBLE PATH OF TRAVEL AS INDICATED ON PLAN IS A BARRIER-FREE ACCESS ROUTE WITHOUT ABRUPT LEVEL CHANGES EXCEEDING ½" IF BEVELED AT 1:2 MAXIMUM SLOPE OR VERTICAL LEVEL CHANGES NOT EXCEEDING ¼" MAXIMUM AND AT LEAST 48" IN WIDTH. SURFACE IS STABLE, FIRM, AND SLIP-RESISTANT. CROSS-SLOPE SHALL NOT BE STEEPER THAN 1:48 AND SLOPE IN THE DIRECTION OF TRAVEL SHALL NOT BE STEEPER THAN 1:20. ACCESSIBLE PATH OF TRAVEL SHALL BE MAINTAINED FREE OF OVERHANGING OBSTRUCTIONS TO 80" MINIMUM AND FREE OF OBJECTS PROTRUDING MORE THAN 4" FROM THE WALL, ABOVE 27" AND LESS THAN 80" ABOVE THE FLOOR. ARCHITECT SHALL VERIFY THAT THERE ARE NO BARRIERS IN THE PATH OF TRAVEL."

FIRE AUTHORITY

DSA 810
FIRE & LIFE SAFETY SITE CONDITIONS SUBMITTAL

CONDITION MEANS AND METHODS RESOLUTION			ALTERNATE ACCEPTED			
			Yes	No	N/A	N/R
4.	Emergency vehicle access roadways do not meet CFC requirements.				✓	
4a.	**Acceptable Alternate:** Emergency vehicle and personnel access as proposed by the project architect is acceptable for providing fire suppression and protection of life and property.					
5.	**Fire Hydrants:** Number and spacing does not meet CFC requirements.				✓	
5a.	**Acceptable Alternate:** Number of fire hydrants and spacing as proposed by the project architect is acceptable for fire suppression and protection of life and property.					
6.	**Fire Hydrants:** Water flow and pressure are less than CFC minimum.				✓	
6a.	**Acceptable Alternate:** The available flow and pressure is acceptable for providing fire suppression and protection of life and property.					
7.	Location of fire department connection(s) serving fire sprinkler systems or standpipe systems does not meet CFC requirements.				✓	
7a.	**Acceptable Alternate:** The location of fire department connection serving the fire sprinkler system and/or standpipe system is acceptable for providing fire suppression and protection of life and property.					

School District Acceptance of Acceptable Design Alternates

By signing this form, the school district acknowledges and accepts the proposed design as an alternative to California Building Code (CBC) and California Fire Code (CFC) minimum requirements, as indicated by one or more of the conditions indicated at items 4a, 5a, 6a or 7a, for providing fire and life safety protection of life and property.

Accepted by: _____ Title: _____

Signature: _____ Date: _____

LOCAL FIRE AUTHORITY (LFA) INFORMATION	
LFA Agency Name:	BAKERSFIELD FIRE DEPARTMENT
LFA Review Official:	PETER ARMAGOST
Title:	FIRE PLANS EXAMINER
Work Phone:	661-326-3697
Work Email:	PARMAGOST@BAKERSFIELDFIRE.US
LFA Reviewer's Signature:	[signature]
Date:	6/19/26

DGS DSA 810 (revised 12/29/20) DEPARTMENT OF GENERAL SERVICES Page 2 of 4
DIVISION OF THE STATE ARCHITECT STATE OF CALIFORNIA

DSA 810

FIRE & LIFE SAFETY SITE CONDITIONS SUBMITTAL

Division of the State Architect (DSA) documents referenced within this publication are available on the DSA Forms or DSA Publications webpages.

To facilitate the Division of the State Architect's (DSA) fire and life safety plan review of project site conditions, DSA requires the design professional to provide the following information at time of project submittal for projects consisting of construction of a new campus, construction of new building(s), additions to existing buildings, and for site alternate design means for fire department emergency vehicle access, and fire suppression water supply.

Information associated with compliance items 1 through 3 below is to be provided for all project types indicated above. Information associated with items 4 through 7 is to be completed when an alternate means is utilized. Acknowledgement by the school district and signature from the Local Fire Authority (LFA) is only required when an alternate design means is being requested.

The Project Information and Fire & Life Safety Information sections are to be completed for all projects and imaged onto the fire access site plan. When an alternate design/means is proposed, all sections on pages 1 and 2 are to be completed and imaged on the fire access site plan.

For additional information refer to the instructions at the end of this form and DSA Policy *PL 09-01: Fire Flow for Buildings.*

PROJECT INFORMATION	
School District/Owner:	Bakersfield City School District
Project Name/School:	Cesar Chavez Elementary School
Project Address:	4201 Mesa Marin Dr., Bakersfield CA, 93306

FIRE & LIFE SAFETY INFORMATION			
1.	Has a fire hydrant flow test been performed within the past 12 months? *(If yes, provide a copy of the test data.)*	Yes ☑	No ☐
2.	Was the fire hydrant water flow test performed as part of this LFA review?	Yes ☑	No ☐
3.	Is the project located within a designated fire hazard severity zone (FHSZ) as established by Cal-Fire? *(If yes, indicate FHSZ classification below.)*	Yes ☐	No ☑
	Refer to the following website for FHSZ locations: http://egis.fire.ca.gov/FHSZ/	Moderate ☐ High ☐	Very High ☐
	Wildland Interface Area (WIFA) *(If any designations are checked, project design must meet the requirements of CBC Chapter 7A.)*		WIFA ☐

DGS DSA 810 (revised 12/29/20) DEPARTMENT OF GENERAL SERVICES Page 1 of 4
DIVISION OF THE STATE ARCHITECT STATE OF CALIFORNIA

HYDRANT FLOW TEST

Hydrant Flow Test Report

Test Date 4/29/2026 **Test Time** 2:58pm

Location
Cesar Chavez School

Tested by
Lilien Y.
Ruben R.
John A.
Herschel M.

Notes
Flow Hydrant is located on the service road, west side of the school. Read Hydrant is located on Mesa Marin Drive, southwest corner of school

Read Hydrant
90 psi **static pressure**
80 psi **residual pressure**
723 ft **hydrant elevation**

Flow Hydrant(s)

Outlet	Elev	Size	C	Pitot Pressure	Flow
#1	723	4	.9	53	3128 gpm

Flow Graph

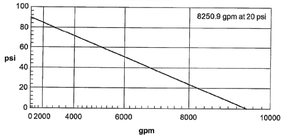

Created with the free hydrant flow test program from www.ignevainc.com

HYDRANT FLOW TEST PERFORMED ON FIRE HYDRANT AT WOOD LANE (SEE 10a).

ERRC NOTE

UPON COMPLETION OF CONSTRUCTION, THE LOCAL FIRE DEPARTMENT AND / OR EMERGENCY COMMUNICATIONS AUTHORITY WILL BE CONTACTED TO OBTAIN DESIGN AND EQUIPMENT SPECIFICATIONS, AND TESTING AND ACCEPTANCE CRITERIA FOR **EMERGENCY RESPONDER RADIO COVERAGE (ERRC)** PER CFC 510. UPON COMPLETION, COPIES OF THE APPROVED PLANS, EQUIPMENT DATA SHEETS, AND PROOF OF TESTING AND ACCEPTANCE DOCUMENTATION SHALL BE PROVIDED TO THE SCHOOL DISTRICT.

PARKING SUMMARY

PARKING LOT #A

PARKING STALLS	= 62
ACCESSIBLE PARKING REQUIRED	3 (1 VAN)
ACCESSIBLE PARKING PROVIDED	3 (1 VAN)

PARKING LOT #B

PARKING STALLS	= 26
ACCESSIBLE PARKING REQUIRED	2 (1 VAN)
ACCESSIBLE PARKING PROVIDED	2 (1 VAN)

PARKING LOT #C

PARKING STALLS	= 4
ACCESSIBLE PARKING REQUIRED	1 (1 VAN)
ACCESSIBLE PARKING PROVIDED	1 (1 VAN)

EXIT DISCHARGE

A. EXIT DISCHARGE TO THE PUBLIC RIGHT OF WAY HAS BEEN PROVIDED IN THIS APPLICATION AND MEETS 2025 CALIFORNIA FIRE CODE SECTION 1028.5.

B. ILLUMINATION HAS BEEN PROVIDED ALONG THE PATH OF TRAVEL FOR THE EXIST DISCHARGE AS OUTLINED IN THE 2025 CALIFORNIA FIRE CODE, SECTION 1008.2.3 BY LIGHTING AT THE FRONT WALL OF THE (E) AND (N) RELOCATABLE BUILDINGS AND (N) SITE LIGHT POLES AS SHOWN ON THE PLAN. MINIMUM ILLUMINATION TO BE NOT LESS THAN 1 FOOT CANDLE AT THE WALKING SURFACE

C. EXIT WIDTH REQUIRED AT MAN GATES TO THE PUBLIC RIGHT OF WAY HAVE BEEN PROVIDED TO BE NOT LESS THAN THE MINIMUM WIDTH OR REQUIRED CAPACITY OF THE EXITS BEING SERVED.

DSA APP NO.

CESAR CHAVEZ ELEMENTARY SCHOOL DSA NO

BUILDING / ROOM NO.	DSA APP NO.	SQUARE FOOTAGE
BLDG 'A'	56162	5,759
BLDG 'C'	59162	10,861
BLDG 'D'	59162	3,563
BLDG 'E'	59162	6,363
BLDG 'F'	59162	6,363
13,14,15,16, 31,32,33,34, & R1	59162	7,680
17	03-109006	960
18	03-104349	1,920
19	03-104349	960
20	03-104349	1,920
23	03-111193	960
28	04-104812	960
29	04-100596	960
K-3	03-104349	960
K-4	03-111193	960

GENERAL NOTES

A. GENERAL CONTRACTOR SHALL FIELD VERIFY ALL SITE CONDITIONS PRIOR TO BID. IF ANY DISCREPANCIES ARE FOUND, THE ARCHITECT SHALL BE NOTIFIED IN WRITING.

B. CONTRACTOR SHALL BE RESPONSIBLE FOR THE CORRECTNESS OF LAYOUTS AND ESTABLISHED LOCATIONS OF BURIED UTILITY LINES. ANY UTILITIES REQUIRING RELOCATION SHALL BE THE RESPONSIBILITY OF THE GENERAL CONTRACTOR. CONTACT APPLICABLE GOVERNING AGENCIES REGARDING ARRANGEMENT AND COORDINATION OF WORK.

C. GENERAL CONTRACTOR WILL BE RESPONSIBLE FOR ANY COMPACTION RETEST DUE TO INITIAL FAILURE.

D. PROJECT INSPECTOR SHALL BE EMPLOYED BY THE OWNER, APPROVED BY THE RESPONSIBLE ARCHITECT AND DSA.

E. A COPY OF TITLE-24, ALL PARTS APPLICABLE, TO BE KEPT AT THE JOB SITE AT ALL TIMES.

F. ADDENDA SHALL BE SIGNED BY THE ARCHITECT (RESPONSIBLE IN CHARGE) AND APPROVED BY DSA.

G. C.C.D.s SHALL BE SIGNED BY THE ARCHITECT (RESPONSIBLE IN CHARGE), OWNER AND APPROVED BY DSA.

H. TESTING LAB SHALL BE EMPLOYED BY THE OWNER, APPROVED BY THE RESPONSIBLE ARCHITECT AND DSA.

I. ALL WORK SURFACES DISTURBED OR DAMAGED BY THE CONSTRUCTION ACTIVITIES SHALL BE REPAIRED IN KIND, TEXTURED AND FINISHED TO MATCH ADJACENT SURFACES.

J. NEW CONCRETE WALKS SHALL HAVE SLOPES NOT TO EXCEED 1 IN 20 IN THE DIRECTION OF PATH OF TRAVEL. PROVIDE CONTROL JOINTS ("C.J.") AT 5'-0" o.c. MAX. AND EXPANSION JOINTS NOT TO EXCEED 30'-0" MAX. PROVIDE MEDIUM BROOM FINISH ON ALL WALKS.

K. ALL BUILDING AND ROOM NAMES INDICATED ON THESE CONSTRUCTION DOCUMENTS ARE "NOT" THE ACTUAL BUILDING / ROOM SIGNAGE DESIGNATION. THE GENERAL CONTRACTOR SHALL FURNISH, INSTALL AND COORDINATE ALL REQUIRED SIGNAGE WITH THE OWNER / ARCHITECT PRIOR TO STARTING CONSTRUCTION.

L. GENERAL CONTRACTOR WILL BE RESPONSIBLE TO COORDINATE RELOCATABLE BUILDING DELIVERY DATES TO THE SCHOOL SITE WITH THE MFGR.

M. THE GENERAL CONTRACTOR SHALL CONSTRUCT ALL NEW RELOCATABLE BUILDING FOUNDATIONS AS PER THE RELOCATABLE BUILDING MANUFACTURER'S DRAWINGS AND SPECIFICATIONS.

N. THE GENERAL CONTRACTOR SHALL BE RESPONSIBLE TO PROVIDE ALL HOOK-UPS TO THE RELOCATABLE BUILDINGS AFTER INSTALLATION HAS BEEN COMPLETED BY THE MANUFACTURER.

O. 5'-0" DEEP x 5'-0" WIDE MINIMUM LANDINGS AT DOORWAYS SHALL BE AS DETAILED AND SHALL HAVE SLOPES (IN ANY DIRECTION) OF NOT GREATER THAN 1/4 IN 12 SLOPE. SLOPES SHALL BE AWAY FROM DOORWAYS.

P. GENERAL / SITE CONTRACTOR SHALL FIELD VERIFY THAT EXISTING PATH OF TRAVEL (P.O.T.) IS A MINIMUM OF 4'-0" WIDE AND IS SLIP RESISTANT. IF IT IS NOT, THEN THE CONTRACTOR SHALL NOTIFY THE ARCHITECT OF RECORD AND A REMEDY OR ALTERNATE P.O.T. WILL BE PROVIDED.

Q. THE MAXIMUM DROP BETWEEN EXISTING FINISHED GRADES AND THE TOP OF THE P.O.T. SHOULD NOT EXCEED 4". IF IT DOES, PROVIDE THE NECESSARY WARNING CURB PER CBC SEC. 11B-303.5.

R. CONTRACTOR TO CONFIRM ALL ELEMENTS NOTED ON ACCESSIBLE PATH COMPLY WITH 2022 CBC. THIS IS TO INCLUDE PARKING STALL SIGNAGE AND STRIPING.

FLOOD ZONE

FLOOD ZONE DETERMINATION	ZONE "X" (0.2%)
F.I.R.M. PANEL DESIGNATION	060077
EFFECTIVE F.I.R.M. DATE	9/26/2008
BASE FLOOD ELEVATION (BFE)	513 FT
COMMUNITY ORDINANCE	BMC 15.74.040
LOCATION	118°53'11"W 35°23'46"N

LEGEND

- EXISTING BUILDING TO REMAIN (NO WORK)
- NEW BUILDINGS UNDER THIS APPLICATION
- 20' WIDE FIRE TRUCK ACCESS OVER AC PAVING
- ACCESSIBLE PATH OF TRAVEL
- EXIT DISCHARGE AND ACCESSIBLE PATH OF TRAVEL TO PUBLIC R.O.W.
- PROPERTY LINE
- EXISTING CHAINLINK FENCE
- EXISTING FIRE HYDRANT
- EXISTING TREE TO REMAIN

KEYNOTES

1. PROPERTY LINE
2. (E) CHAIN LINK FENCE TO REMAIN
3. (E) PARKING LOT AND STRIPING TO REMAIN
4. (E) BUILDING TO REMAIN (NO WORK)
5. (E) A.C. PAVING TO REMAIN
6. (E) TURF AREA TO REMAIN
7. (E) LANDSCAPE PLANTER TO REMAIN
8. (E) CONCRETE WALK TO REMAIN
9. REPLACE (E) SITE TOW AWAY SIGN w/ (N) SIE TOW AWAY SIGN. -SEE 3/A1.05.
10. (E) FIRE HYDRANT TO REMAIN.

10a. (E) TEST FIRE HYDRANT.

11. (E) ACCESSIBLE MENS & WOMENS STAFF RESTROOM, -PER DSA APP#03-104349.
12. (E) SITE LIGHT POLES TO REMAIN.
13. (E) ACCESSIBLE BOYS RESTROOM, -PER DSA APP#03-104349 & 03-109006.
14. (E) ACCESSIBLE GIRLS RESTROOM, -PER DSA APP#03-104349 & 03-109006
15. (E) HI-LOW DRINKING FOUNTAIN, -PER DSA APP#03-109006.
16. (E) 20' WIDE SWING CHAIN LINK GATE. PROVIDED (N) FIRE DEPARTMENT APPROVED KNOX BOX.
17. (E) ACCESSIBLE PARKING STALL AND SIGNAGE, -PER DSA APP#59162 & 03-107003.
18. (E) SOLAR PANELS, -PER DSA APP#03-119250.
19. (E) 20'-0" WIDE FIRE TRUCK ACCESS LANE, -PER DSA APP#03-119250.
20. (N) RELOCATABLE BUILDING ON WOOD FOUNDATION w/ METAL RAMPS FROM STOCKPILE, -PER MFR. PC
21. (E) ENTRY GATE (PER DSA APP#59162). MODIFY GATE HINGES TO REVERSE SWING OF GATE. w/ (N) PANIC HARDWARE. -SEE 6/A1.05. (1)
22. (E) FLAG POLE TO REMAIN.
23. (E) CURB RAMP, -PER DSA APP#59162 & 03-109006.
24. (E) MONUMENT SIGN TO REMAIN.
25. (E) BOYS RESTROOM, -PER 59162.
26. (E) GIRLS RESTROOM, -PER 59162.
27. (E) ROLLING GATE, PROVIDE (N) FIRE DEPARTMENT APPROVED KNOX BOX.
28. EXIT DISCHARGE AND ACCESSIBLE PATH OF TRAVEL TO PUBLIC RIGHT OF WAY
29. ACCESSIBLE PATH OF TRAVEL
30. (E) CMU WALL TO REMAIN
31. (E) ACCESSIBLE MENS & WOMENS RESTROOM, -PER DSA APP# 59162
32. (E) RELOCATABLE BUILDING TO BE MOVED. -PER DSA APP# 03-109006

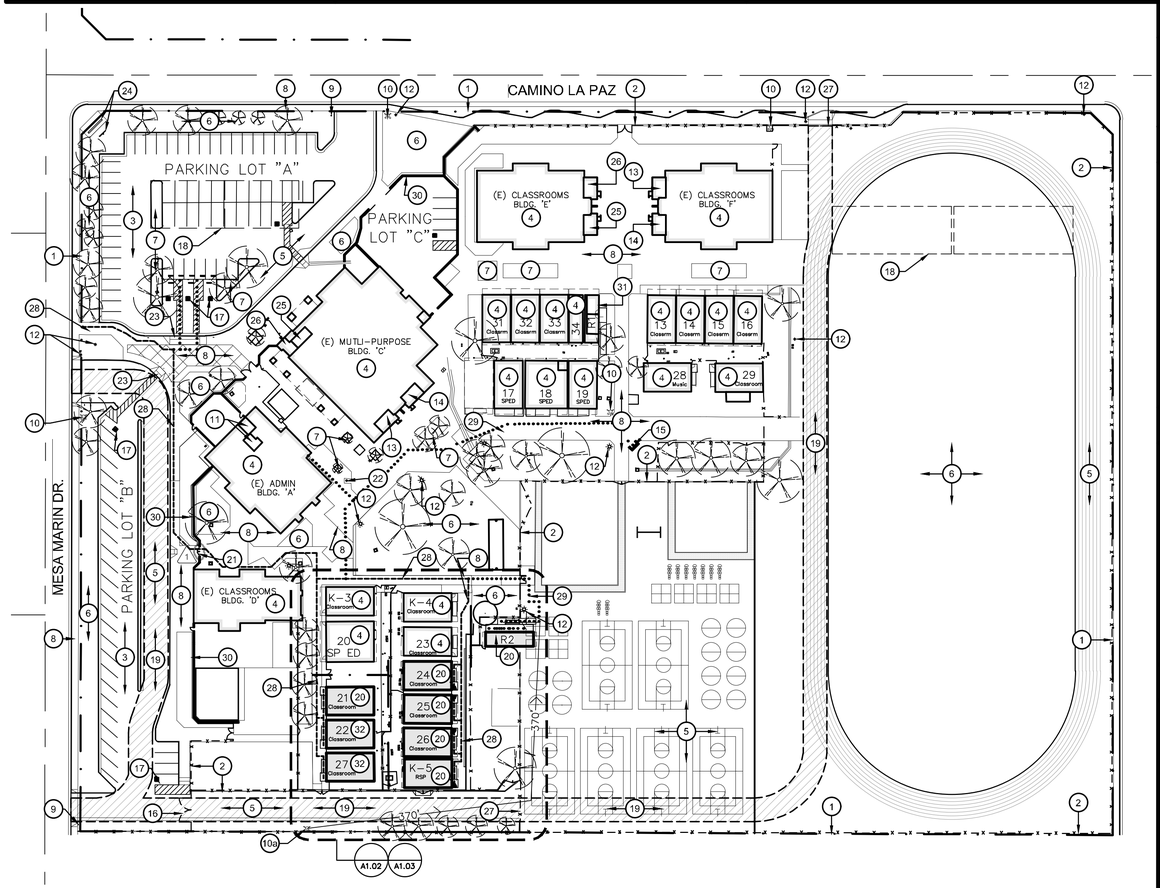

FIRE AUTHORITY SITE PLAN

7 RELOCATABLE CLASSROOMS & 1 RELOCATABLE TOILET BLDG

SCALE: 1" = 60'

BUILDING DATA

Building Name	21	22	24	25	26	27	K-5	R-2
DSA APP#	03-109006	03-109006	03-104224	04-105455	04-104169	04-105299	04-105455	04-122602
Use	CLASSROOM	CLASSROOM	CLASSROOM	CLASSROOM	CLASSROOM	CLASSROOM	CLASSROOM	TOILET BLDG
Occupancy	E	E	E	E	E	E	E	E
Construction Type	VB	VB	VB	VB	VB	VB	VB	VB
Allowable Building Area	9,500	9,500	9,500	9,500	9,500	9,500	9,500	9,500
Actual Building Area	960	960	960	960	960	960	960	480
Total Building Area	960	960	960	960	960	960	960	480
Maximum Height	40'	40'	40'	40'	40'	40'	40'	40'
Actual Height	±11'-10"	±11'-10"	±11'-10"	±11'-10"	±11'-10"	±11'-10"	±11'-10"	±11'-10"
Automatic Fire Spinkler System	NO	NO	NO	NO	NO	NO	NO	NO

TOTAL BUILDING AREA: 7,200
*Per CBC Table 506.2 Allowable Building Area for E Occupancy (most restrictive) 9,500 S.F. frontage increase is not needed

Owner:

BAKERSFIELD CITY SCHOOL DISTRICT
1300 BAKER ST
BAKERSFIELD, CA 93305

Project Name:

7 RELOCATABLE CLASSROOMS & 1 RELOCATABLE TOILET BLDG

Project Address:

CESAR CHAVEZ ELEMENTARY SCHOOL
4201 MESA MARIN DR.
BAKERSFIELD, CA 93306

integrated designs
by SOMAM, Inc.

ARCHITECTURE ENGINEERING INTERIOR DESIGN

6011 N. FRESNO STREET, SUITE 130
FRESNO CALIFORNIA 93710
P:(559) 436-0881 F:(559) 436-0887
E: design@somam.com
integrateddesigns.com

Ownership of Documents
This document, the ideas and designs incorporated herein, as an instrument of Professional Service is the property of Integrated Designs by SOMAM Inc. and is not to be used, in whole or in part for any other project without written authorization.
© COPYRIGHT 2025

Stamp:

LICENSED ARCHITECT CURTIS E. FLINN No. C 28956 REN. 5-31-27 STATE OF CALIFORNIA

Sheet Title:

FIRE AUTHORITY SITE PLAN

Job No.: **5682.1**

Sheet No.: **A1.00**

Release: ADDENDUM 01 (1) 10/28/26

G:\2026frs\26-5682.1 BCSD CESAR CHAVEZ E.S. 7 RELOCATABLE CR & 1 TOILET BLDG\Sheets SEAN PARKER

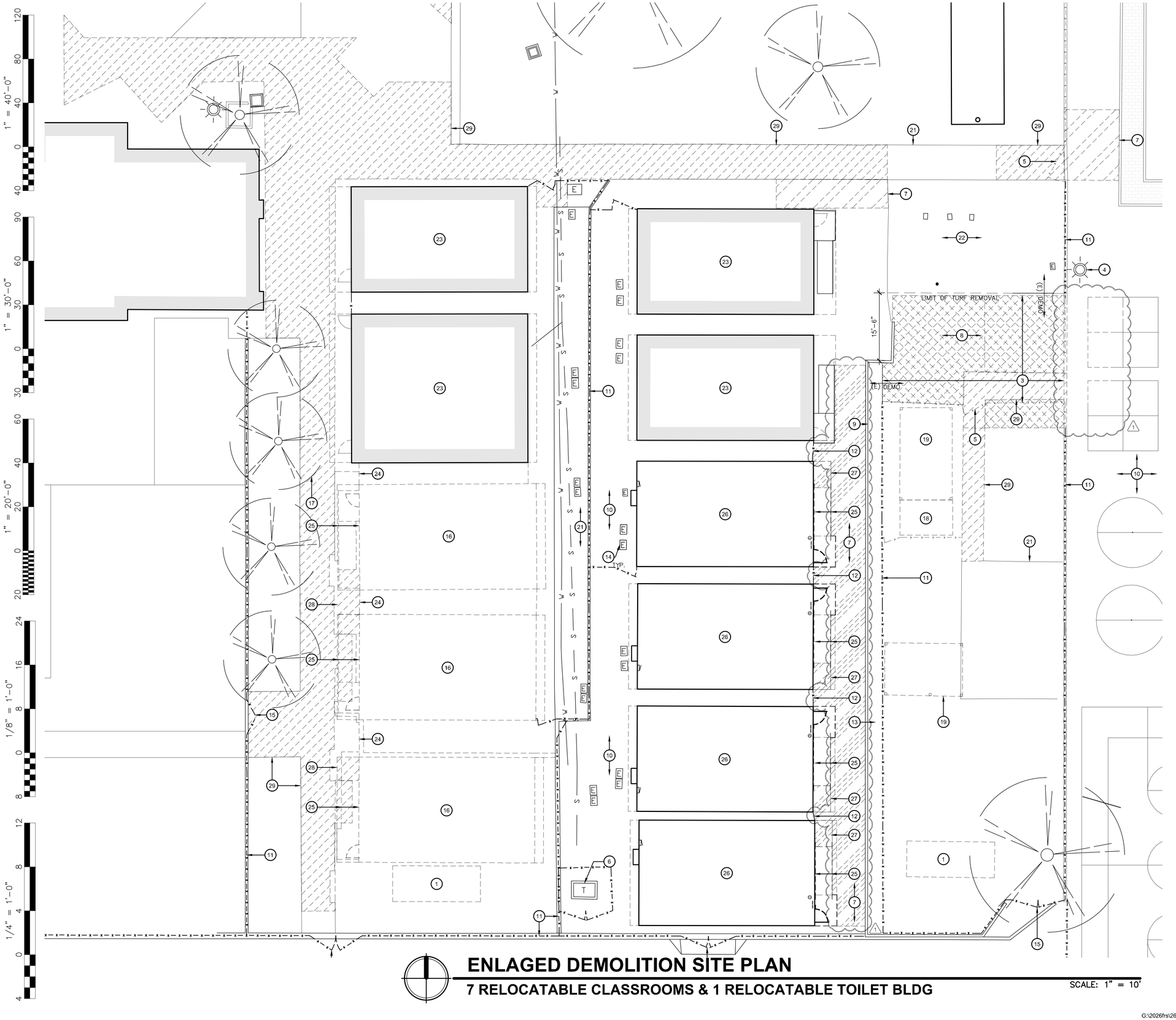

ENLAGED DEMOLITION SITE PLAN

7 RELOCATABLE CLASSROOMS & 1 RELOCATABLE TOILET BLDG

SCALE: 1" = 10'

KEY NOTES

1. (E) SEA TRAIN TO BE REMOVED BY SCHOOL DISTRICT
2. (E) FIRE HYDRANT
3. REMOVE (E) CHAINLINK FENCE, MOWSTRIP & FOOTINGS
4. (E) LIGHT POLE TO REMAIN
5. REMOVE (E) CHAINLINK GATE
6. (E) TRANSFORMER
7. REMOVE (E) AC PAVING
8. REMOVE (E) TURF. ADJUST (E) IRRIGATION HEADS AND LATERALS ACCORDINGLY TO PROVIDE FULL COVERAGE OF (E) TURF TO REMAIN. REFER TO NOTE #22.
9. (E) RETAINING WALL TO REMAIN
10. (E) AC PAVING TO REMAIN
11. (E) CHAINLINK FENCE TO REMAIN
12. (E) CLOSURE PANEL TO REMAIN
13. (E) PLANTER TO REMAIN
14. (E) PULL BOX
15. (E) GATE TO REMAIN
16. (E) BUILDING TO BE MOVED BY SCHOOL DISTRICT AND BUILDING MANUFACTUR - SEE A1.03 FOR NEW LOCATION. DISCONNECT ALL UTILITIES
17. (E) TREE TO REMAIN
18. (E) GREENHOUSE TO REMAIN
19. (E) TRELLIS STRUCTURE TO REMAIN
20. (E) CONCRETE PAVERS TO REMAIN
21. (E) SIDE WALK TO REMAIN
22. (E) TURF TO REMAIN. PROTECT IN PLACE EXISTING IRRIGATION SYSTEM.
23. (E) BUILDING - NO WORK.
24. REMOVE (E) CLOSURE PANEL
25. (E) METAL RAMP & HANDRAIL TO BE REMOVED BY SCHOOL DISTRICT AND BUILDING MANUFACTURE
26. (E) NON-APPROVED PORTABLE BUILDING TO BE APPROVED IN PLACE
27. REMOVE (E) AC PAVING LANDING AS NECESSARY FOR THE INSTALLATION OF THE NEW RAMP
28. REMOVE (E) CONCRETE LANDING
29. REMOVE (E) CONCRETE SIDEWALK

GENERAL NOTES

A. DETERIORATION OR EXISTING NON-COMPLIANT CONSTRUCTION:

IF ANY CONDITION IS DISCOVERED WHICH, IF LEFT UNCORRECTED, WOULD MAKE THE BUILDING NON-COMPLIANT WITH THE REQUIREMENTS OF THE EDITION OF THE CBC IN FORCE AT THE TIME OF ORIGINAL CONSTRUCTION, THE CONDITION MUST BE CORRECTED IN ACCORDANCE WITH CURRENT CODE REQUIREMENTS. A C.C.D. OR A SEPARATE SET OF PLANS AND SPECIFICATIONS DETAILING AND SPECIFYING THE REQUIRED REPAIR WORK SHALL BE SUBMITTED TO AND APPROVED BY DSA BEFORE PROCEEDING WITH THE REPAIR WORK.

*PER DSA IR 16-1, SEC. 5.4

B. CONTRACTOR SHALL ADJUST ALL DOOR CLOSERS TO A MAXIMUM OPENING FORCE OF 5 LBF

C. ALL IRRIGATION WITHIN THE AREA OF CONSTRUCTION TO BE REMOVED, REROUTED, ALTERED AND/OR REINSTALLED AS REQUIRED TO PROVIDE COMPLETE AND ADEQUATE COVERAGE FOR THE REMAINING LANDSCAPED AREAS

D. INTERIOR FINISHES TO REMAIN UNLESS NOTED OTHERWISE PATCH AND REPAIR ANY FINISHES DISTURBED BY CONSTRUCTION TO MATCH EXISTING ADJACENT FINISHES.

LEGEND

- (E) BLDG (NO WORK)
- NEW BUILDINGS UNDER THIS APPLICATION
- (E) BLDG TO BE RELOCATED
- (E) BLDG TO BE APPROVED
- REMOVE (E) CONCRETE PAVING
- REMOVE (E) TURF
- REMOVE (E) AC PAVING
- W — (E) WATER LINE
- E — (E) ELECTRICAL LINE
- S — (E) SEWER LINE

Owner:

BAKERSFIELD CITY SCHOOL DISTRICT
1300 BAKER ST
BAKERSFIELD, CA 93305

Project Name:

7 RELOCATABLE CLASSROOMS & 1 RELOCATABLE TOILET BLDG

Project Address:

CESAR CHAVEZ ELEMENTARY SCHOOL
4201 MESA MARIN DR.
BAKERSFIELD, CA 93306

integrated designs
by SOMAM, Inc.

ARCHITECTURE
ENGINEERING
INTERIOR DESIGN

6011 N. FRESNO STREET, SUITE 130
FRESNO CALIFORNIA 93710
P:(559) 436-0881 F:(559) 436-0887
E: design@somam.com
integrateddesigns.com

Ownership of Documents

This document, the ideas and designs incorporated herein, as an instrument of Professional Service is the property of Integrated Designs by SOMAM Inc. and is not to be used, in whole or in part for any other project without written authorization.

© COPYRIGHT 2025

Stamp:

LICENSED ARCHITECT
CURTIS E. FLINN
No. C 28956
REN. 5-31-27
STATE OF CALIFORNIA

Sheet Title:

ENLAGED DEMOLITION SITE PLAN

Job No.:

5682.1

Sheet No.:

A1.02

Release: ADDENDUM 01 (1) 10/28/26

G:\2026frs\26-5682.1 BCSD CESAR CHAVEZ E.S. 7 RELOCATABLE CR & 1 TOILET BLDG\Sheets SEAN PARKER 10/29/26

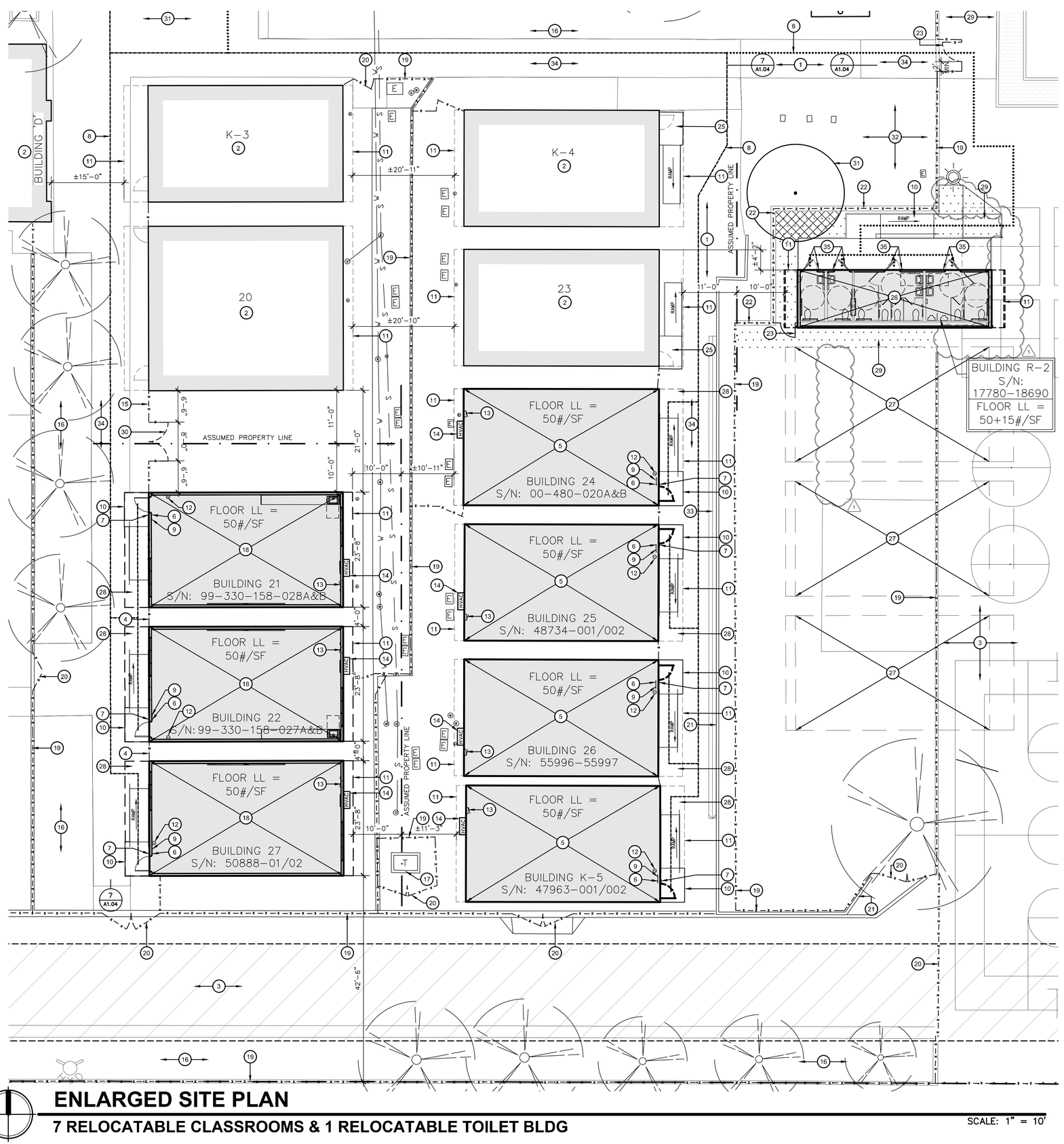

ENLARGED SITE PLAN

7 RELOCATABLE CLASSROOMS & 1 RELOCATABLE TOILET BLDG

SCALE: 1" = 10'

GENERAL NOTES

A. DETERIORATION OR EXISTING NON-COMPLIANT CONSTRUCTION:

IF ANY CONDITION IS DISCOVERED WHICH, IF LEFT UNCORRECTED, WOULD MAKE THE BUILDING NON-COMPLIANT WITH THE REQUIREMENTS OF THE EDITION OF THE CBC IN FORCE AT THE TIME OF ORIGINAL CONSTRUCTION, THE CONDITION MUST BE CORRECTED IN ACCORDANCE WITH CURRENT CODE REQUIREMENTS. A C.C.D. OR A SEPARATE SET OF PLANS AND SPECIFICATIONS DETAILING AND SPECIFYING THE REQUIRED REPAIR WORK SHALL BE SUBMITTED TO AND APPROVED BY DSA BEFORE PROCEEDING WITH THE REPAIR WORK.

*PER DSA IR 16-1, SEC. 5.4

B. CONTRACTOR SHALL ADJUST ALL DOOR CLOSERS TO A MAXIMUM OPENING FORCE OF 5 LBF

C. FIRE ALARM AT THE EXISTING BUILDINGS: EXISTING CLASSROOMS WILL HAVE DESKS, FURNITURE, AND SUPPLIES IN PLACE DURING THE FIRE ALARM DEMO AND INSTALLATION. THE GENERAL CONTRACTOR IS RESPONSIBLE FOR PROTECTING DESKS, FURNITURE, AND SUPPLIES DURING CONSTRUCTION ACTIVITIES. THE CONTRACTOR IS RESPONSIBLE FOR REMOVING AND REPLACING CEILING TILES REQUIRED TO PERFORM THE WORK.

D. OWNER WILL CONTRACT DIRECTLY WITH A RELOCATABLE BUILDING COMPANY TO RELOCATE EXISTING PORTABLE BUILDINGS AS REQUIRED. OWNER WILL ALSO PROVIDE NEW PORTABLE BUILDINGS, INCLUDING MANUFACTURED RAMPS AND RAILINGS.

ALS SYSTEM

ASSISTIVE LISTENING SYSTEM (ALS):

1. PROVIDE A SET OF PORTABLE ALS WITH A TRANSMITTER AND A MINIMUM OF TWO HEARING-AID COMPATIBLE RECEIVERS AND TWO NECK LOOPS.

   PER CBC 2025, 11B-219.
   960S.F. / 20 (OCCUPANT LOAD) = 48
   48 x 4% = 1.92 ALS DEVICES REQUIRED (OR 2 MIN.).
2. THE SYSTEM SHALL BE STORED IN THE SCHOOL ADMINISTRATION OFFICE UNTIL REQUESTED FOR USE.
3. SPECIFY THE ALS TYPE AND THAT THE SYSTEM SHALL BE CAPABLE OF INTERFACING WITH THE VOICE AMPLIFICATION SYSTEMS AND ANY MEDIA/AUDIO PROGRAM SYSTEM INSTALLED, AND SHALL COMPLY WITH CBC SECTIONS 11B-219 AND 11B-706.
4. PROVIDE ANCHOR AUDIO ASSISTIVE LISTENING PACKAGE AL-9000 OR EQUAL, WHICH INCLUDES THE FOLLOWING MODELS: 4-ALB-9000: FOURASSISTIVE LISTENING BELT PACK RECEIVERS WITH EAR BUDS AND NECH LOOPS, A WIRELESS MICROPHONE & BATTER CHARGER, & 1-ALT-9000: ONE ASSISTIVE LISTENING TRANSMITTER BASE STATION AND }" CABLE

HARDSCAPE AREA SHADING

TOTAL SQUARE FOOTAGE OF HARDSCAPE AREA:	748 S.F.
REQUIRED SQUARE FOOTAGE OF HARDSCAPE AREA SHADED (20%):	149 S.F.
TREE CANOPY AREA	
MEDIUM: 20' - 30' DIA.	EACH @ 490 S.F.
CERCIS canadensis texensis 'Oklahoma'	1
Shade Tree (40% Shaded):	1 @ 196 S.F
TOTAL SQUARE FOOTAGE:	196 S.F.
PERCENTAGE OF HARDSCAPE AREA SHADED:	26%

SHADING LEGEND

- (N) TREE (CERCIS CANADENSIS TEXENSIS 'OKLAHOMA' - 24" BOX SPECIMEN, MIN. / QUANT. 1), INSTALL PER DISTRICT STANDARDS. INSTALL ROOT BARRIERS PER DISTRICT STANDARDS.
- HARDSCAPE AREA
- HARDSCAPE SHADE PROVIDED BY TREES AT MATURE GROWTH
- EXISTING TREE

KEY NOTES

1. (E) SIDEWALK TO REMAIN.
2. (E) BUILDING TO REMAIN. NO WORK.
3. (E) A.C. PAVING TO REMAIN. NO WORK.
4. (N) CLOSURE PANEL, SEE DETAIL 4/A1.05.
5. (N) PORTABLE CLASSROOM BUILDINGS FROM STOCKPILE ON RAISED WOOD FOUNDATIONS TO BE APPROVED IN PLACE W/ METAL RAMP SUPPLIED BY MANUFACTURER. -SEE ELECTRICAL DRAWINGS FOR POWER, DATA, FIRE ALARM, & LOW VOLTAGE SCOPE OF WORK
6. (N) TACTILE EXIT SIGN, -PER 2/A1.04
7. (N) ROOM IDENTIFICATION AND ISA SIGN, - PER 3 & 5/A1.04.
8. ACCESSIBLE PATH OF TRAVEL PER THIS APPLICATION. SEE ACCESSIBILITY NOTES, -SEE SHEET A1.00.
9. (N) ALS SIGN, -SEE 5/A1.05 AND ALS SYSTEM NOTES FOR REQUIREMENTS.
10. (N) METAL RAMP. -SEE MANUFACTURER'S PC DRAWINGS. -TO BE PROVIDED & INSTALLED BY BUILDING MANUFACTURER & SCHOOL DISTRICT
11. ROOF OVERHANG.
12. 2A:10BC FIRE EXTINGUISHER ON WALL BRACKET.
13. PORTABLE CLASSROOM ELECTRICAL PANEL.
14. PORTABLE CLASSROOM HEAT PUMP.
15. (N) 6FT CHAINLINK FENCE & GATE -SEE DETAIL 16/A1.03
16. (E) LANDSCAPE AREA
17. (E) TRANSFORMER
18. (N) LOCATION OF PORTABLE CLASSROOM BY SCHOOL DISTRICT. TO BE MOVED/RELOCATED BY BUILDING MANUFACTURER & SCHOOL DISTRICT. -SEE ELECTRICAL DRAWINGS FOR POWER, DATA, FIRE ALARM, & LOW VOLTAGE SCOPE OF WORK
19. (E) CHAINLINK FENCE TO REMAIN
20. (E) CHAINLINK GATE TO REMAIN
21. (E) RETAINING WALL TO REMAIN
22. (N) 6FT CHAINLINK FENCE -PER 16/A1.05
23. (N) 6'-0" HIGH CHAIN LINK GATE, -PER 16/A1.05
24. NOT USED
25. (E) METAL RAMP (NO WORK)
26. (N) PORTABLE TOILET BUILDINGS FROM STOCKPILE ON RAISED WOOD FOUNDATIONS WITH METAL RAMP SUPPLIED BY MANUFACTURER. -TO BE INSTALLED BY BUILDING MANUFACTURER & SCHOOL DISTRICT. - SEE ELECTRICAL DRAWINGS FOR POWER, DATA, FIRE ALARM, & LOW VOLTAGE SCOPE OF WORK
27. FUTURE BUILDING
28. (N) CONC. RAMP TRANSITION, - PER 1/A1.05
29. (N) AC PAVING, -SEE CIVIL
30. (N) 8'-0" WIDE DOUBLE GATE, -PER 13/A1.04
31. (N) TREE. PROVIDE DISTRICT APPROVED ROOT BARRIERS TO BE INSTALLED ACCORDINGLY TO MANUFACTURER'S RECOMMENDATIONS.
32. (E) TURF TO REMAIN. PROTECT EXISTING IRRIGATION IN PLACE. CONTRACTOR TO ADJUST IRRIGATION ACCORDINGLY TO ENSURE A FULLY FUNCTIONAL SYSTEM AND PROPER SPRAY COVERAGE ACCORDING TO STATE STANDARDS AND REQUIREMENTS.
33. (N) CONC. VALLEY GUTTER - SEE CIVIL
34. (N) CONCRETE SIDEWALK, -SEE CIVIL & 10/A1.04
35. (N) ACCESSIBLE RR SIGNAGE PER DETAIL 6/A1.04. TYPICAL AT ALL EXTERIOR DOORS OF BUILDING R-2

LEGEND

- EXISTING BUILDING TO REMAIN (NO WORK)
- NEW PORTABLE BUILDING UNDER THIS APPLICATION
- ACCESSIBLE PATH OF TRAVEL, THIS APPLICATION
- EXIT DISCHARGE AND ACCESSIBLE PATH OF TRAVEL TO PUBLIC R.O.W.
- NEW AC PAVING PER 6/A1.04
- (N) TREE (CERCIS CANADENSIS TEXENSIS 'OKLAHOMA' - 24" BOX SPECIMEN MIN. / QTY. 1)

Owner:

BAKERSFIELD CITY SCHOOL DISTRICT
1300 BAKER ST
BAKERSFIELD, CA 93305

Project Name:

7 RELOCATABLE CLASSROOMS & 1 RELOCATABLE TOILET BLDG

Project Address:

CESAR CHAVEZ ELEMENTARY SCHOOL
4201 MESA MARIN DR.
BAKERSFIELD, CA 93306

integrated designs
by SOMAM, Inc.

ARCHITECTURE ENGINEERING INTERIOR DESIGN

6011 N. FRESNO STREET, SUITE 130
FRESNO CALIFORNIA 93710
P:(559) 436-0881 F:(559) 436-0887
E: design@somam.com
integrateddesigns.com

Ownership of Documents

This document, the ideas and designs incorporated herein, as an instrument of Professional Service is the property of Integrated Designs by SOMAM Inc. and is not to be used, in whole or in part for any other project without written authorization.

© COPYRIGHT 2025

Stamp:

LICENSED ARCHITECT — CURTIS E. FLYNN — No. C 28956 — REN. 5-31-27 — STATE OF CALIFORNIA

Sheet Title:

ENLARGED SITE PLAN

Job No.: **5682.1**

Sheet No.: **A1.03**

Release: ADDENDUM 01 (1) 10/28/26

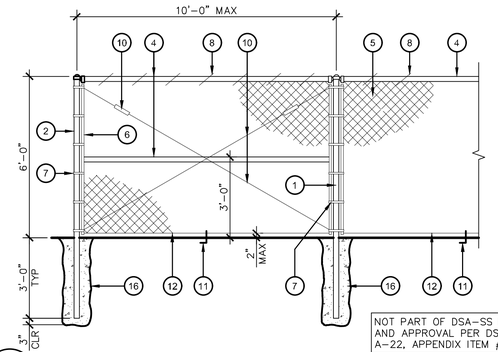

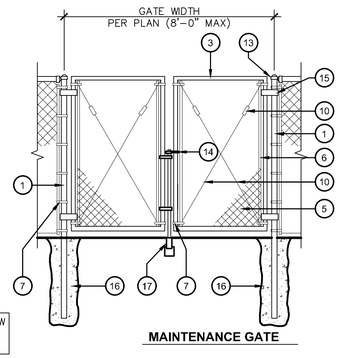

MAINTENANCE GATE

NOT PART OF DSA-SS REVIEW AND APPROVAL PER DSA IR A-22, APPENDIX ITEM #A9

TYPICAL FENCE & GATE KEYNOTES

1. 4" O.D. GALVANIZED STEEL GATE POST (9.1 lb/ft)
2. 2 7/8" O.D. GALVANIZED STEEL END OR CORNER POST (5.79 lb/ft)
3. 2" O.D. GALVANIZED STEEL GATE FRAME (2.72 lb/ft)
4. 1 5/8" O.D. GALVANIZED STEEL HORIZONTAL RAIL (2.27 lb/ft)
5. 2"x2" MESH x 9 GAUGE GALVANIZED FENCE FABRIC WITH KNUCKLED TOP AND BOTTOM SELVAGE. FENCE FABRIC TO BE GALVANIZED BEFORE WEAVING (GBW)
6. 1/4"x3/4" GALVANIZED STEEL STRETCHER BAR
7. GALVANIZED STEEL STRETCHER BAR TENSION BAND, MIN. OF 6 TENSION BANDS
8. 9 GAUGE (0.148" DIA.) GALVANIZED STEEL TIE WIRES OR HOG RINGS AT 15" MAX.
9. SPACING. MIN. 8 TIE WIRES PER EACH 10" HORIZONTAL RAIL
10. GALVANIZED ADJUSTABLE TURNBUCKLE FOR 3/8" DIA. TRUSS ROD 3/8" DIA. GALVANIZED STEEL ADJUSTABLE TRUSS ROD. TRUSS RODS REQUIRED FOR ALL GATE POST PANELS AND END OR CORNER POST PANELS
11. 3/8"x6" GALVANIZED HOOK BOLT WITH NUT IMBEDDED IN MIDWAY BETWEEN POSTS
12. 7 GAUGE (0.177" DIA.) GALVANIZED STEEL TENSION WIRE
13. RAINPROOF CAP
14. DROP ROD WITH LOCKING HASP
15. 180° GATE HINGE, TYP
16. 12"ø CONCRETE POST FOOTING (TYP.)
17. CENTER GATE SLIDE SLEEVE,

13 / A1.04 TYPICAL CHAIN LINK FENCE AND GATES
ADY100-01
SCALE: N.T.S.

OMIT DETAIL

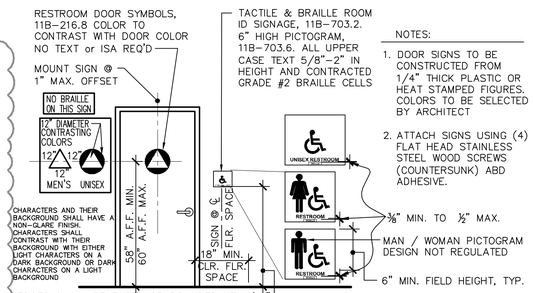

NOTES:
1. DOOR SIGNS TO BE CONSTRUCTED FROM 1/4" THICK PLASTIC OR HEAT STAMPED FIGURES. COLORS TO BE SELECTED BY ARCHITECT
2. ATTACH SIGNS USING (4) FLAT HEAD STAINLESS STEEL WOOD SCREWS (COUNTERSUNK) ABD ADHESIVE.

6 / A1.04 ACCESSIBLE RESTROOM SIGNAGE
ADA000-01
SCALE: 1' = 1'-0"

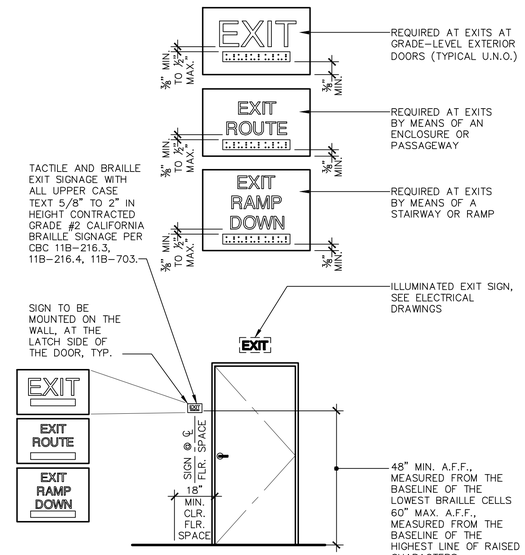

2 / A1.04 TYPICAL EXIT SIGNAGE
ADX200-01
SCALE: 3/8" = 1'-0"

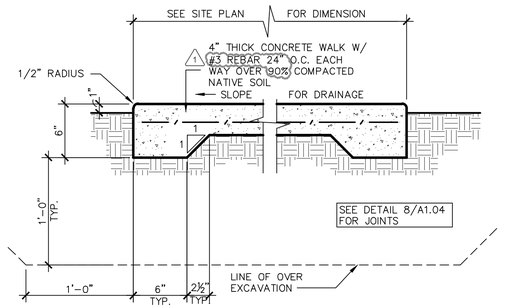

10 / A1.04 TYPICAL CONCRETE WALK
ADS100-15
SCALE: 1 1/2" = 1'-0"

INSTALLATION:
1. DRILL HOLE 1/8" LARGER THAN REBAR DIAMETER
2. CLEAN HOLE THOROUGHLY OF DUST AND FRAGMENTS WITH WATER, WIRE BRUSH, AND AIR.

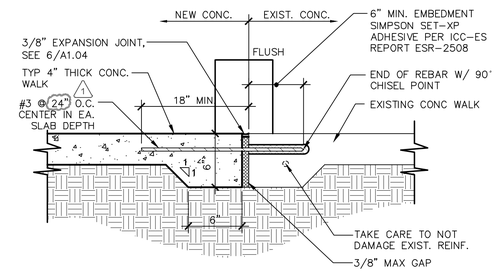

7 / A1.04 (N) CONC WALK TO (E) CONC WALK
ADS100-05
SCALE: 1 1/2" = 1'-0"

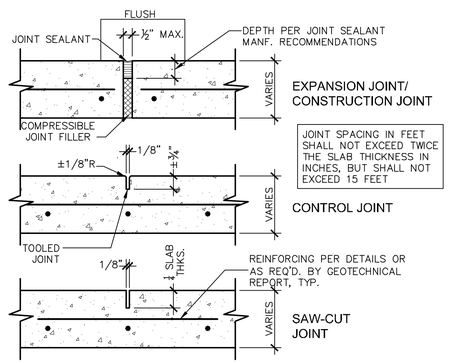

8 / A1.04 CONCRETE JOINTS
ADS110-01
SCALE: 3" = 1'-0"

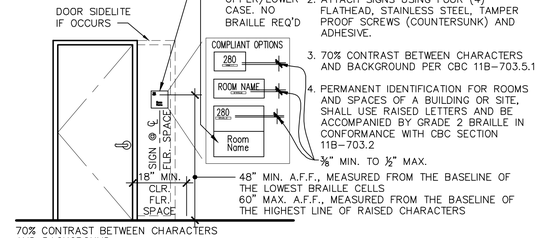

NOTES:
1. DOOR SIGNS TO BE CONSTRUCTED FROM ¼" THICK PLASTIC OR HEAT STAMPED FIGURES. COLORS TO BE SELECTED BY ARCHITECT.
2. ATTACH SIGNS USING FOUR (4) FLATHEAD, STAINLESS STEEL, TAMPER PROOF SCREWS (COUNTERSUNK) AND ADHESIVE.
3. 70% CONTRAST BETWEEN CHARACTERS AND BACKGROUND PER CBC 11B-703.5.1
4. PERMANENT IDENTIFICATION FOR ROOMS AND SPACES OF A BUILDING OR SITE, SHALL USE RAISED LETTERS AND BE ACCOMPANIED BY GRADE 2 BRAILLE IN CONFORMANCE WITH CBC SECTION 11B-703.2
⅜" MIN. TO ½" MAX.

3 / A1.04 ROOM ID SIGNAGE
ADX100-01
SCALE: NO SCALE

NOTES:
1. DOOR SIGNS TO BE CONSTRUCTED FROM 1/4" THICK PLASTIC OR HEAT STAMPED FIGURES. COLORS TO BE SELECTED BY ARCHITECT.
2. ATTACH SIGNS USING FOUR (4) FLATHEAD, STAINLESS STEEL, TAMPER PROOF SCREWS (COUNTERSUNK) AND ADHESIVE.
3. CHARACTERS AND THEIR BACKGROUND SHALL HAVE A NON-GLARE FINISH AND CONTRAST WITH EITHER LIGHT CHARACTERS ON A DARK BACKGROUND OR DARK CHARACTERS ON A LIGHT BACKGROUND, CBC 11B-703.5.1.
4. ISA SYMBOL CAN ALSO BE PLACED ON DOOR. THE LOCATION IS NOT REGULATED.

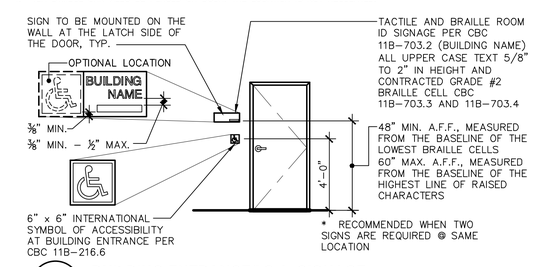

4 / A1.04 BUILDING ENTRANCE/I.S.A. SIGNAGE
ADA100-01
SCALE: 1/4" = 1'-0"

Owner:
BAKERSFIELD CITY SCHOOL DISTRICT
1300 BAKER ST
BAKERSFIELD, CA 93305

Project Name:
7 RELOCATABLE CLASSROOMS & 1 RELOCATABLE TOILET BLDG

Project Address:
CESAR CHAVEZ ELEMENTARY SCHOOL
4201 MESA MARIN DR.
BAKERSFIELD, CA 93306

integrated designs
by SOMAM, Inc.
ARCHITECTURE ENGINEERING INTERIOR DESIGN
6011 N. FRESNO STREET, SUITE 130
FRESNO CALIFORNIA 93710
P:(559) 436-0881 F:(559) 436-0887
E: design@somam.com
integrateddesigns.com

Ownership of Documents
This document, the ideas and designs incorporated herein, as an instrument of Professional Service is the property of Integrated Designs by SOMAM Inc. and is not to be used, in whole or in part for any other project without written authorization.
© COPYRIGHT 2025

Stamp:
LICENSED ARCHITECT CURTIS E. FLINN No. C 28956 REN. 5-31-27 STATE OF CALIFORNIA

Sheet Title:
SITE DETAILS

Job No.:
5682.1

Sheet No.:
A1.04

Release: ADDENDUM 01 (1) 10/28/26

10/29/26

G:\2026frs\26-5682.1 BCSD CESAR CHAVEZ E.S. 7 RELOCATABLE CR & 1 TOILET BLDG\Sheets SEAN PARKER

1" = 40'-0"
1" = 30'-0"
1" = 20'-0"
1/8" = 1'-0"
1/4" = 1'-0"

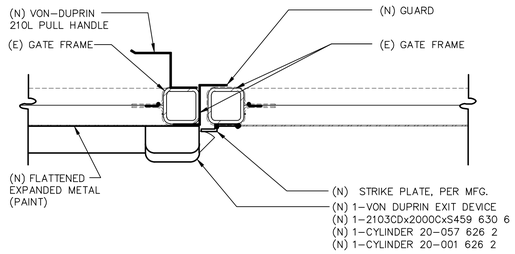

9 A1.05 (N) LOCKING DEVICE @ ACCESSIBLE (E) GATE
ADS100-49 SCALE: 3" = 1'-0"

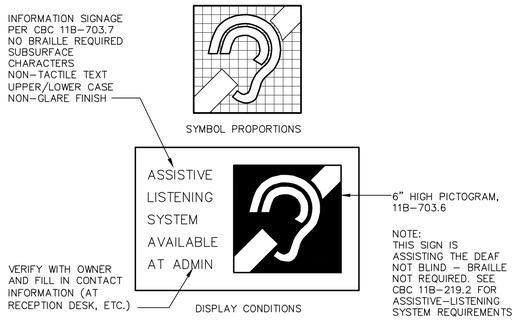

5 A1.05 INTERNATIONAL SYMBOL OF ACCESS FOR HEARING IMPAIRED
ADA200-05 SCALE: 3" = 1'-0"

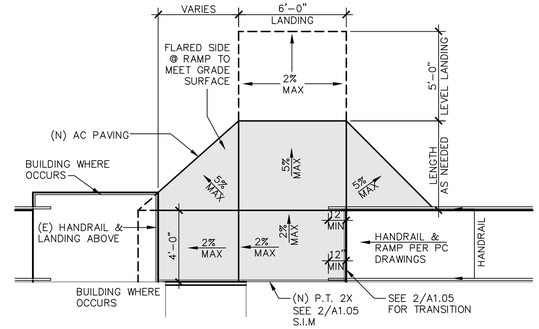

1 A1.05 AC RAMP TRANSITION
ADA000-03 SCALE: 1/4" = 1'-0"

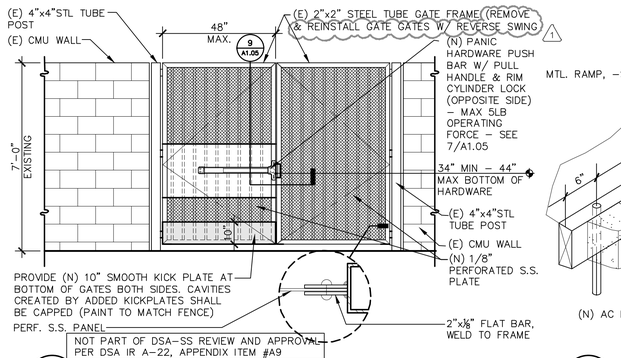

6 A1.05 (E) DECORATIVE STEEL GATE w/ (N) PAINC HARDWARE
ADS100-50 SCALE: 3/8" = 1'-0"

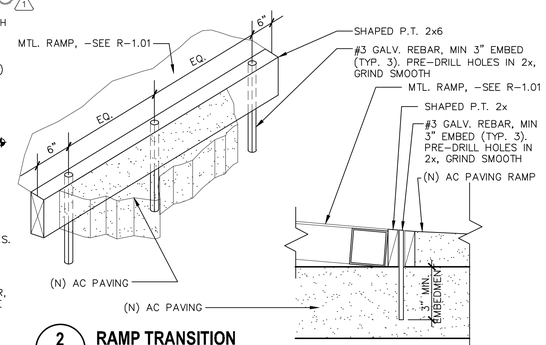

2 A1.05 RAMP TRANSITION
ADE100-01 SCALE: 3" = 1'-0"

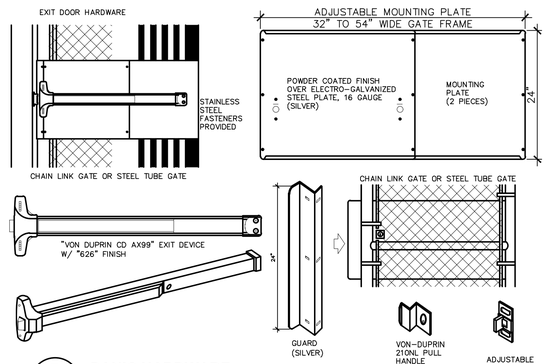

7 A1.05 PANIC HARDWARE
ADS100-52 NOTE: NO MANUAL CANE BOLTS OR SLIDE BOLTS WITH PANIC HARDWARE N.T.S.

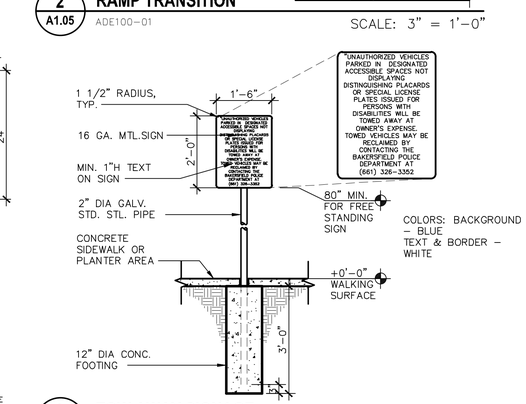

3 A1.05 TOW AWAY SIGNAGE
ADX100-10 SCALE: 1/2" = 1'-0"

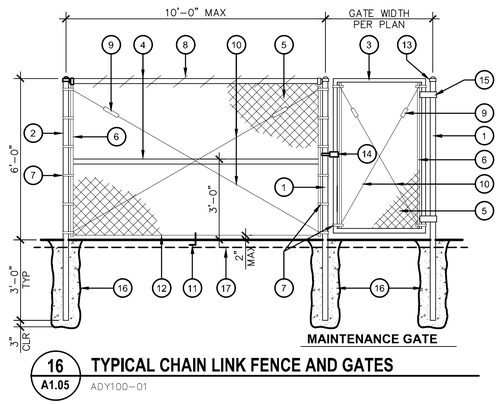

16 A1.05 TYPICAL CHAIN LINK FENCE AND GATES
ADY100-01

TYPICAL FENCE & GATE KEYNOTES

1. 2 7/8" O.D. GALVANIZED STEEL GATE POST (9.1 lb/ft)
2. 2 7/8" O.D. GALVANIZED STEEL END OR CORNER POST (5.79 lb/ft)
3. 2" O.D. GALVANIZED STEEL GATE FRAME (2.72 lb/ft)
4. 1 5/8" O.D. GALVANIZED STEEL HORIZONTAL RAIL (2.27 lb/ft)
5. 2"x2" MESH x 9 GAUGE GALVANIZED FENCE FABRIC WITH KNUCKLED TOP AND BOTTOM SELVAGE. FENCE FABRIC TO BE GALVANIZED BEFORE WEAVING (GBW)
6. 1/4"x3/4" GALVANIZED STEEL STRETCHER BAR
7. GALVANIZED STEEL STRETCHER BAR TENSION BAND, MIN. OF 6 TENSION BANDS
8. 9 GAUGE (0.148" DIA.) GALVANIZED STEEL TIE WIRES OR HOG RINGS AT 15" MAX. SPACING. MIN. 8 TIE WIRES PER EACH 10' HORIZONTAL RAIL
9. GALVANIZED ADJUSTABLE TURNBUCKLE FOR 3/8" DIA. TRUSS ROD
   3/8" DIA. GALVANIZED STEEL ADJUSTABLE TRUSS ROD.
10. TRUSS RODS REQUIRED FOR ALL GATE POST PANELS AND END OR CORNER POST PANELS
11. 3/8"x6" GALVANIZED HOOK BOLT W ITH NUT IMBEDDED IN MIDWAY BETWEEN POSTS
12. 7 GAUGE (0.177" DIA.) GALVANIZED STEEL TENSION WIRE
13. RAINPROOF CAP
14. LOCKING HASP
15. 180° GATE HINGE, TYP
16. 12"ø CONCRETE POST FOOTING (TYP.)
17. EITHER NEW CONC. WALK PER DETAIL 10/A1.03 OR MOWSTRIP PER DETAIL 5/A1.03.SEE SITE PLAN

SCALE: N.T.S.

NOT PART OF DSA-SS REVIEW AND APPROVAL PER DSA IR A-22, APPENDIX ITEM #A9

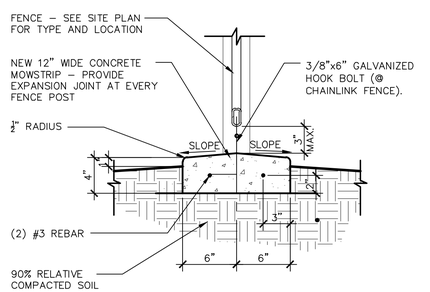

8 A1.05 MOWSTRIP @ FENCE
ADS100-33 SCALE: 1 1/2" = 1'-0"

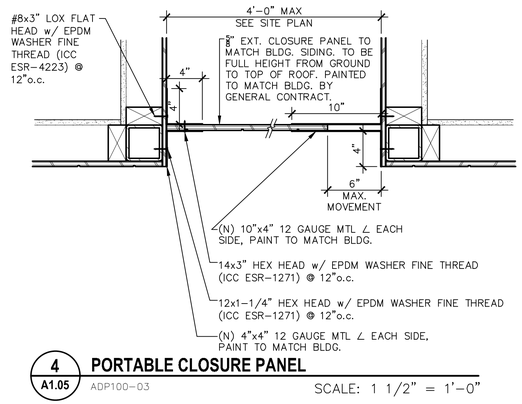

4 A1.05 PORTABLE CLOSURE PANEL
ADP100-03 SCALE: 1 1/2" = 1'-0"

Owner:

BAKERSFIELD CITY SCHOOL DISTRICT
1300 BAKER ST
BAKERSFIELD, CA 93305

Project Name:

7 RELOCATABLE CLASSROOMS & 1 RELOCATABLE TOILET BLDG

Project Address:

CESAR CHAVEZ ELEMENTARY SCHOOL
4201 MESA MARIN DR.
BAKERSFIELD, CA 93306

integrated designs
by SOMAM, Inc.

ARCHITECTURE ENGINEERING INTERIOR DESIGN

6011 N. FRESNO STREET, SUITE 130
FRESNO CALIFORNIA 93710
P:(559) 436-0881 F:(559) 436-0887
E: design@somam.com
integrateddesigns.com

Ownership of Documents
This document, the ideas and designs incorporated herein, as an instrument of Professional Service is the property of Integrated Designs by SOMAM Inc. and is not to be used, in whole or in part for any other project without written authorization.
© COPYRIGHT 2025

Stamp:

LICENSED ARCHITECT CURTIS E. FLINN No. C 28956 REN. 5-31-27 STATE OF CALIFORNIA

Sheet Title:

SITE DETAILS

Job No.: **5682.1**

Sheet No.: **A1.05**

Release: ADDENDUM 01 ⚠1 10/28/26

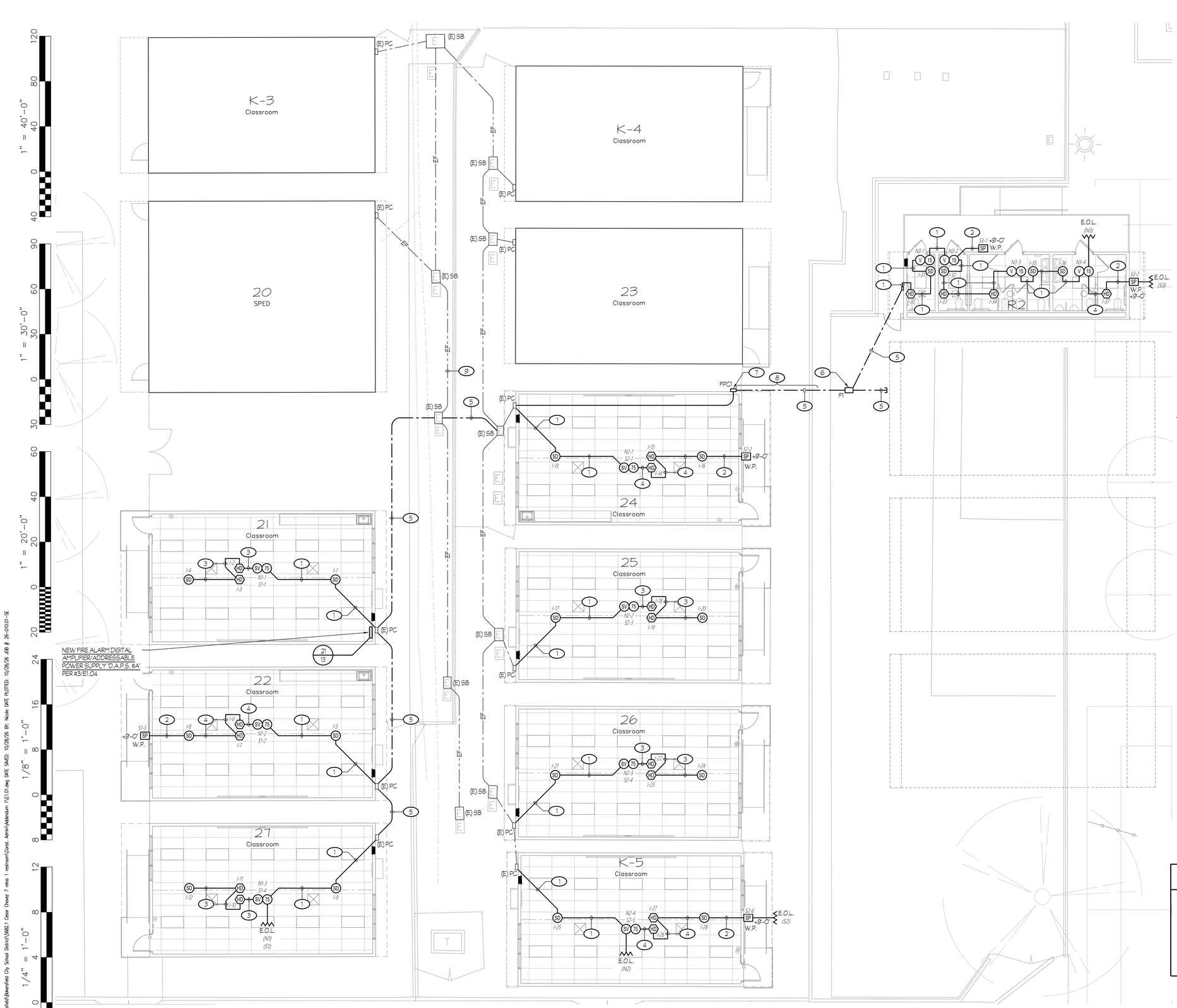

NOTES (THIS SHEET ONLY):

1. 3/4"C - TWO 'FA' CABLES, TWO 'FSP' CABLES, 4 #12.
2. 1/2"C - TWO 'FSP' CABLES.
3. 3/4"C - TWO 'FA' CABLES.
4. 3/4"C - TWO 'FA' CABLES, TWO 'FSP' CABLES.
5. REFER TO FIRE ALARM SYSTEM RISER DIAGRAM, DETAIL #1/E1.03 FOR FIRE ALARM FEEDER OR 'SPARE' CONDUIT REQUIREMENTS.
6. REFER TO DETAIL #4/E1.04 FOR PULL BOX REQUIREMENTS. TYPICAL, U.O.N.. WHERE FEEDER OR BRANCH CIRCUIT CONDUCTORS ARE ROUTING THRU THE PULL BOX, PROVIDE GROUNDING AND BONDING OF THE STEEL CHECKER-PLATE COVER PER DETAIL #5/E1.04.
7. PROVIDE 12" SQ. x 6" DP. FIRE ALARM PULL ENCLOSURE MOUNTED HIGH ON WALL. ROUTE NEW CONDUITS OUT OF THE BACK OF THE PULL CAN AND SEAL AROUND CONDUIT PENETRATIONS TO PREVENT LEAKAGE INTO BUILDING.
8. SAWCUT AND PATCH OR BORE UNDER EXISTING CONCRETE/AC PAVING PER DETAIL #6/E1.04.
9. — - — EF — - — DENOTES THE APPROXIMATE LOCATION OF EXISTING 'FIRE ALARM' FEEDERS AND/OR 'SPARE' CONDUITS. VERIFY EXACT LOCATION AT SITE.

GENERAL NOTE:

1. INTERIOR FIRE ALARM CABLING ALLOWED TO BE FREE-AIR RUN WITHIN CONCEALED ACCESSIBLE CEILING AREAS. PROVIDE J-HOOKS AS REQUIRED FOR ROUTING OF FREE-AIR CABLES. CONDUIT ONLY REQUIRED IN EXPOSED LOCATIONS.

1

COMPLETE AUTOMATIC FIRE ALARM SYSTEM PLAN SUBMITTAL

THE FIRE ALARM SYSTEM SHOWN ON THESE PLANS HAS BEEN SUBMITTED AND APPROVED BY THE DIVISION OF THE STATE ARCHITECT. ANY SUBSTITUTION OF THE FIRE ALARM SYSTEM SHALL BE RESUBMITTED TO THE ARCHITECT FOR REVIEW AND APPROVAL. THE CONTRACTOR SHALL PAY ANY ADDITIONAL FEES THAT ARE INCURRED DUE TO THIS SUBSTITUTION.

THE FIRE ALARM SYSTEM SHALL BE A TOTAL (COMPLETE) AUTOMATIC HEAT AND SMOKE DETECTION SYSTEM, PER C.F.C. SECTION 907.2.3.6, AND SHALL COVER EVERY ROOM AND/OR AREA. UPON THE ACTIVATION OF ANY INITIATION DEVICE THE FIRE ALARM SYSTEM SHALL ALERT ALL OCCUPANTS AND TRANSMIT THE ALARM, SUPERVISORY, AND TROUBLE SIGNALS TO AN APPROVED SUPERVISING STATION (C.F.C. SECTION 907.2.3.5).

FIRE ALARM PLAN

7 RELOCATABLE CLASSROOMS & 1 RELOCATABLE TOILET BLDG

SCALE: 1/8" = 1'

Rose Sing Eastham & Associates
Electrical Consultants
131 S. Dunworth - (559)733-2671
Visalia, California 93292-6705

REGISTERED PROFESSIONAL ENGINEER — PETER KIRK SINGH — No. E-18786 Exp. 6/30/27 — ELECTRICAL — STATE OF CALIFORNIA

Owner:

..\Logos\Bakersfield City SD.jpg

BAKERSFIELD CITY SCHOOL DISTRICT
1300 BAKER ST
BAKERSFIELD, CA 93305

Project Name:

7 RELOCATABLE CLASSROOMS & 1 RELOCATABLE TOILET BLDG

Project Address:

CESAR CHAVEZ ELEMENTARY SCHOOL
4201 MESA MARIN DR.
BAKERSFIELD, CA 93306

..\ID_Logo_color.jpg

integrated designs
by SOMAM, Inc.

ARCHITECTURE
ENGINEERING
INTERIOR DESIGN

6011 N. FRESNO STREET, SUITE 130
FRESNO CALIFORNIA 93710
P:(559) 436-0881 F:(559) 436-0887
E: design@somam.com
integrateddesigns.com

Ownership of Documents
This document, the ideas and designs incorporated herein, as an instrument of Professional Service is the property of Integrated Designs by SOMAM Inc. and is not to be used, in whole or in part for any other project without written authorization

© COPYRIGHT 2025

Stamp:

LICENSED ARCHITECT — CURTIS E. FLYNN — CA Lic. No. C-28956 — REN. 5-31-27 — STATE OF CALIFORNIA

Sheet Title:

FIRE ALARM PLAN

Job No.: **5682.1**

Sheet No.: **E1.01**

Release: ADDENDUM 1 (1) 10/28/26

NICOLE CORRIGAN 10/28/26

Z:\Drafting\Jobs\5XX\5XX0\5XX0.1\5682.1 Cesar Chavez 7 relos 1 restroom\Const. Admin\Addendum 1\E1.01.dwg DATE SAVED: 10/28/26 By: Nicole DATE PLOTTED: 10/28/26 JOB # 26-010.01-SE

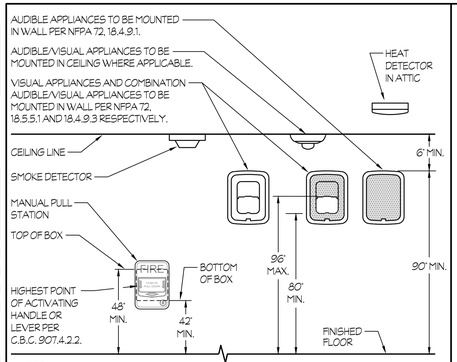

1 FIRE ALARM DEVICES ELEVATION

NTS

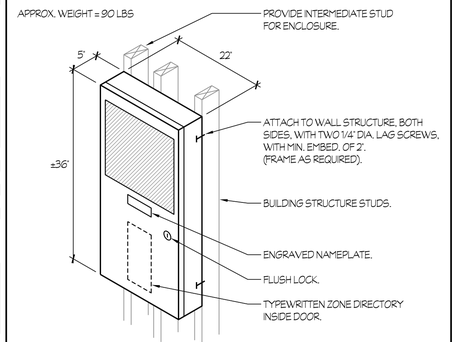

2 FIRE ALARM CONTROL PANEL "F.A.C.P. #A" MOUNTING

NTS

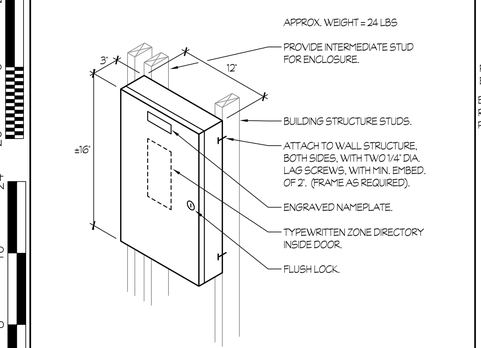

3 FIRE ALARM DIGITAL AMPLIFIER/ ADDRESSABLE POWER SUPPLY "D.A.P.S. #A"

NTS

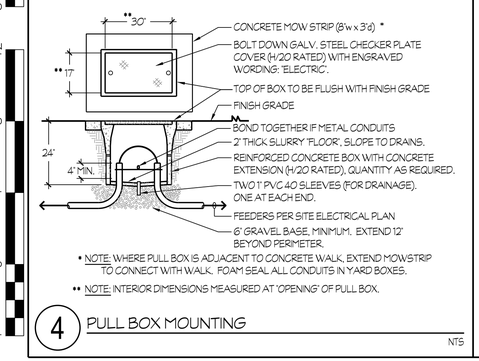

* NOTE: WHERE PULL BOX IS ADJACENT TO CONCRETE WALK, EXTEND MOWSTRIP TO CONNECT WITH WALK. FOAM SEAL ALL CONDUITS IN YARD BOXES.

** NOTE: INTERIOR DIMENSIONS MEASURED AT 'OPENING' OF PULL BOX.

4 PULL BOX MOUNTING

NTS

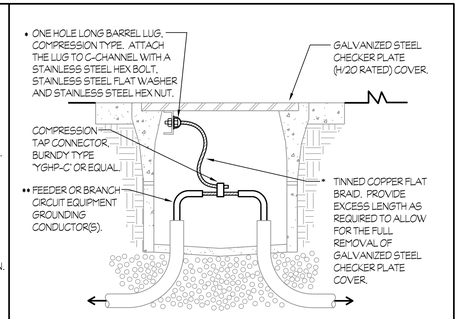

* ONE HOLE LONG BARREL LUG, COMPRESSION TYPE. ATTACH THE LUG TO C-CHANNEL WITH A STAINLESS STEEL HEX BOLT, STAINLESS STEEL FLAT WASHER AND STAINLESS STEEL HEX NUT.

** FEEDER OR BRANCH CIRCUIT EQUIPMENT GROUNDING CONDUCTOR(S).

* THIS TYPICAL WORK SHALL BE PROVIDED FOR EACH SECTION OF A MULTIPLE SECTION COVER.

** THIS TYPICAL WORK SHALL BE DONE FOR EACH OF THE LARGEST FEEDER (OR BRANCH CIRCUIT) EQUIPMENT GROUNDING CONDUCTOR, PASSING THRU THE RESPECTIVE PULL BOX, WHICH ORIGINATE FROM SEPARATE SOURCES/VOLTAGES.

MATRIX FOR TINNED COPPER FLAT BRAID

SIZE OF EQUIPMENT GROUNDING CONDUCTOR (a)	ALPHA WIRE PART #	OLYMPIC WIRE AND CABLE PART #
#8	1233	708
#6	1235	710
#4	1239	710
#2 THRU #1/0	1240	713
#2/0 THRU #4/0	1241	714

(a) CONTAINED IN THE LARGEST FEEDER (OR BRANCH CIRCUIT) PASSING THRU THE RESPECTIVE PULL BOX.

5 GROUNDING AND BONDING OF STEEL CHECKER PLATE COVERS

NTS

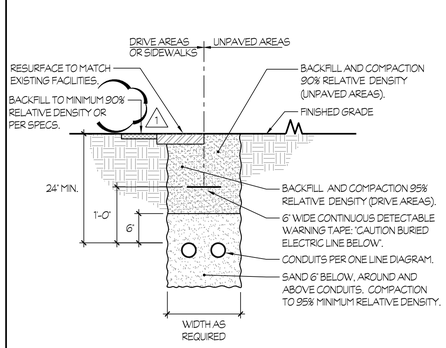

6 TRENCH DETAIL

NTS

VOLTAGE DROP CALCULATIONS (OHM'S LAW)

$$\text{VOLTAGE DROP} = 2\left(\frac{\text{DC RESISTANCE AT 75°C FROM TABLE 8, C.E.C.}}{1000}\right)\left(\text{LENGTH OF CIRCUIT}\right)\left(\text{CURRENT}\right)$$

$$\text{PERCENT VOLTAGE DROP} = \frac{\text{VOLTAGE DROP}}{\text{NOMINAL VOLTAGE}} \times 100$$

1. NOTIFICATION APPLIANCE CIRCUIT "N1":

(SV)(75) : 3 x 0.111 A = 0.333 A

0.333 A

VOLTAGE DROP = $2(1.98)\left(\frac{315}{1000}\right)(0.333) = 0.42$ V.D.

PERCENT VOLTAGE DROP = $\frac{0.42}{24} \times 100 = 1.8\,\%$

2. NOTIFICATION APPLIANCE CIRCUIT "N2":

(SV)(75) : 4 x 0.111 A = 0.444 A

0.444 A

VOLTAGE DROP = $2(1.98)\left(\frac{580}{1000}\right)(0.444) = 1.02$ V.D.

PERCENT VOLTAGE DROP = $\frac{1.02}{24} \times 100 = 4.3\,\%$

3. NOTIFICATION APPLIANCE CIRCUIT "N3":

(V)(15) : 4 x 0.041 A = 0.164 A

0.164 A

VOLTAGE DROP = $2(1.98)\left(\frac{290}{1000}\right)(0.164) = 0.19$ V.D.

PERCENT VOLTAGE DROP = $\frac{0.19}{24} \times 100 = 0.8\,\%$

FIRE ALARM CONTROL PANEL "F.A.C.P. #A" BATTERY CALCULATION

DESCRIPTION	QUANTITY	SUPV. CURRENT EACH	SUPV. CURRENT SUB-TOTAL	ALARM CURRENT EACH	ALARM CURRENT SUB-TOTAL
CONTROL PANEL WITH DACT	1	0.54200	0.54200	0.73700	0.73700
MANUAL PULL STATION	1	0.00038	0.000	0.00038	0.00038
SMOKE DETECTOR	18	0.00030	0.00540	0.00030	0.00540
ATTIC HEAT DETECTOR	18	0.00030	0.00540	0.00030	0.00540
MONITOR MODULE	2	0.00035	0.00070	0.00035	0.00070
RELAY MODULE	1	0.00026	0.00026	0.00026	0.00026
	TOTALS		0.554		0.749

TOTAL ALARM CURRENT OF 0.749 x 0.250 (15 MINUTES) = 0.187 A.H.
TOTAL SUPERVISORY CURRENT OF 0.554 x 24 HOURS = 13.296 A.H.
TOTAL AMP HOURS REQUIRED 13.483 A.H.
x 1.25 SAFETY FACTOR
16.854 A.H.

PROVIDE 18.0 AMP HOUR BATTERIES

NEW FIRE ALARM DIGITAL AMPLIFIER/ADDRESSABLE POWER SUPPLY "D.A.P.S. #A" BATTERY CALCULATION

DESCRIPTION	QUANTITY	SUPV. CURRENT EACH	SUPV. CURRENT SUB-TOTAL	ALARM CURRENT EACH	ALARM CURRENT SUB-TOTAL
DIGITAL AMPLIFIER	1	0.40000	0.40000	0.55000	0.55000
ADDRESSABLE POWER SUPPLY	1	0.13000	0.13000	0.13000	0.13000
15cd STROBE (CEILING)	4	—	—	0.04100	0.16400
(A) SPEAKER/15cd STROBE (CEILING)	7	—	—	0.11100	0.77700
	TOTALS		0.530		1.621

TOTAL ALARM CURRENT OF 1.621 x 0.250 (15 MINUTES) = 0.405 A.H.
TOTAL SUPERVISORY CURRENT OF 0.530 x 24 HOURS = 12.720 A.H.
TOTAL AMP HOURS REQUIRED 13.125 A.H.
x 1.25 SAFETY FACTOR
16.406 A.H.

PROVIDE 18.0 AMP HOUR BATTERIES

(A) THE CURRENT VALUES LISTED ARE FOR THE STROBES ONLY. THE SPEAKER CURRENT IS INCLUDED IN THE VALUES LISTED UNDER THE DIGITAL AMPLIFIER.

SPEAKER dB LOSS CALCULATION

SPEAKER CIRCUIT	SPEAKER VOLTAGE	WIRE SIZE	RESISTANCE PER FOOT	FEET REQUIRED ON CIRCUIT	WIRE RESISTANCE	TOTAL WATTAGE OF SPEAKERS ON CIRCUIT	SPEAKER CURRENT (AMPS)	RESISTANCE OF SPEAKER LOAD	WIRE SIZE	ACTUAL VOLTAGE AT SPEAKER LOAD	ACTUAL WATTS AT SPEAKER LOAD	dB LOSS
S1	70	18	0.01278	315	4.026	5	0.071	980.00	18	69.7136	4.9592	-0.04
S2	70	16	0.0082	580	4.756	8	0.114	612.50	16	69.4606	7.8772	-0.07
S3	70	14	0.0052	290	1.508	2	0.029	2450.00	14	69.9569	1.9975	-0.01

NOTE:
CALCULATION IS BASED ON EACH OF THE 'INTERIOR' SPEAKERS TAPPED AT 1 WATT AND EACH OF THE 'EXTERIOR' SPEAKERS TAPPED AT 2 WATTS.

COMPLETE AUTOMATIC FIRE ALARM SYSTEM PLAN SUBMITTAL

THE FIRE ALARM SYSTEM SHOWN ON THESE PLANS HAS BEEN SUBMITTED AND APPROVED BY THE DIVISION OF THE STATE ARCHITECT. ANY SUBSTITUTION OF THE FIRE ALARM SYSTEM SHALL BE RESUBMITTED TO THE ARCHITECT FOR REVIEW AND APPROVAL. THE CONTRACTOR SHALL PAY ANY ADDITIONAL FEES THAT ARE INCURRED DUE TO THIS SUBSTITUTION.

THE FIRE ALARM SYSTEM SHALL BE A TOTAL (COMPLETE) AUTOMATIC HEAT AND SMOKE DETECTION SYSTEM, PER C.F.C. SECTION 907.2.3.6, AND SHALL COVER EVERY ROOM AND/OR AREA. UPON THE ACTIVATION OF ANY INITIATION DEVICE THE FIRE ALARM SYSTEM SHALL ALERT ALL OCCUPANTS AND TRANSMIT THE ALARM, SUPERVISORY, AND TROUBLE SIGNALS TO AN APPROVED SUPERVISING STATION (C.F.C. SECTION 907.2.3.5).

Rose Sing Eastham & Associates
Electrical Consultants
131 S. Dunworth - (559)733-2671
Visalia, California 93292-6705

REGISTERED PROFESSIONAL ENGINEER — KIRK A. EASTHAM — No. E-18786 Exp. 6/30/27 — ELECTRICAL — STATE OF CALIFORNIA

Owner:

..\Logos\Bakersfield City SD.jpg

BAKERSFIELD CITY SCHOOL DISTRICT
1300 BAKER ST
BAKERSFIELD, CA 93305

Project Name:

7 RELOCATABLE CLASSROOMS & 1 RELOCATABLE TOILET BLDG

Project Address:

CESAR CHAVEZ ELEMENTARY SCHOOL
4201 MESA MARIN DR.
BAKERSFIELD, CA 93306

.\ID_Logo_color.jpg

integrated designs
by SOMAM, Inc.

ARCHITECTURE ENGINEERING INTERIOR DESIGN

6011 N. FRESNO STREET, SUITE 130
FRESNO CALIFORNIA 93710
P:(559) 436-0881 F:(559) 436-0887
E: design@somam.com
integrateddesigns.com

Ownership of Documents

This document, the ideas and designs incorporated herein, as an instrument of Professional Service is the property of Integrated Designs by SOMAM Inc. and is not to be used, in whole or in part for any other project without written authorization.

© COPYRIGHT 2025

Stamp:

LICENSED ARCHITECT — CURTIS E. FLYNN — C26956 (Signature) — REN. 5-31-27 — STATE OF CALIFORNIA

Sheet Title:

F.A. SYSTEM DETAILS AND CALCS.

Job No.: **5682.1**

Sheet No.: E1.04

Release: ADDENDUM 1 (1) 10/28/26

NICOLE CORRIGAN 10/28/26

Z:\Drafting\Jobs\25CS\25CS03.5\Bakersfield\Bakersfield City School District\5682.1 Cesar Chavez 7 relos 1 restroom\Const. Admin\Addendum 1\E1.04.dwg DATE SAVED: 10/28/26 BY: Nicole DATE PLOTTED: 10/28/26 JOB #: 26-010101-SE