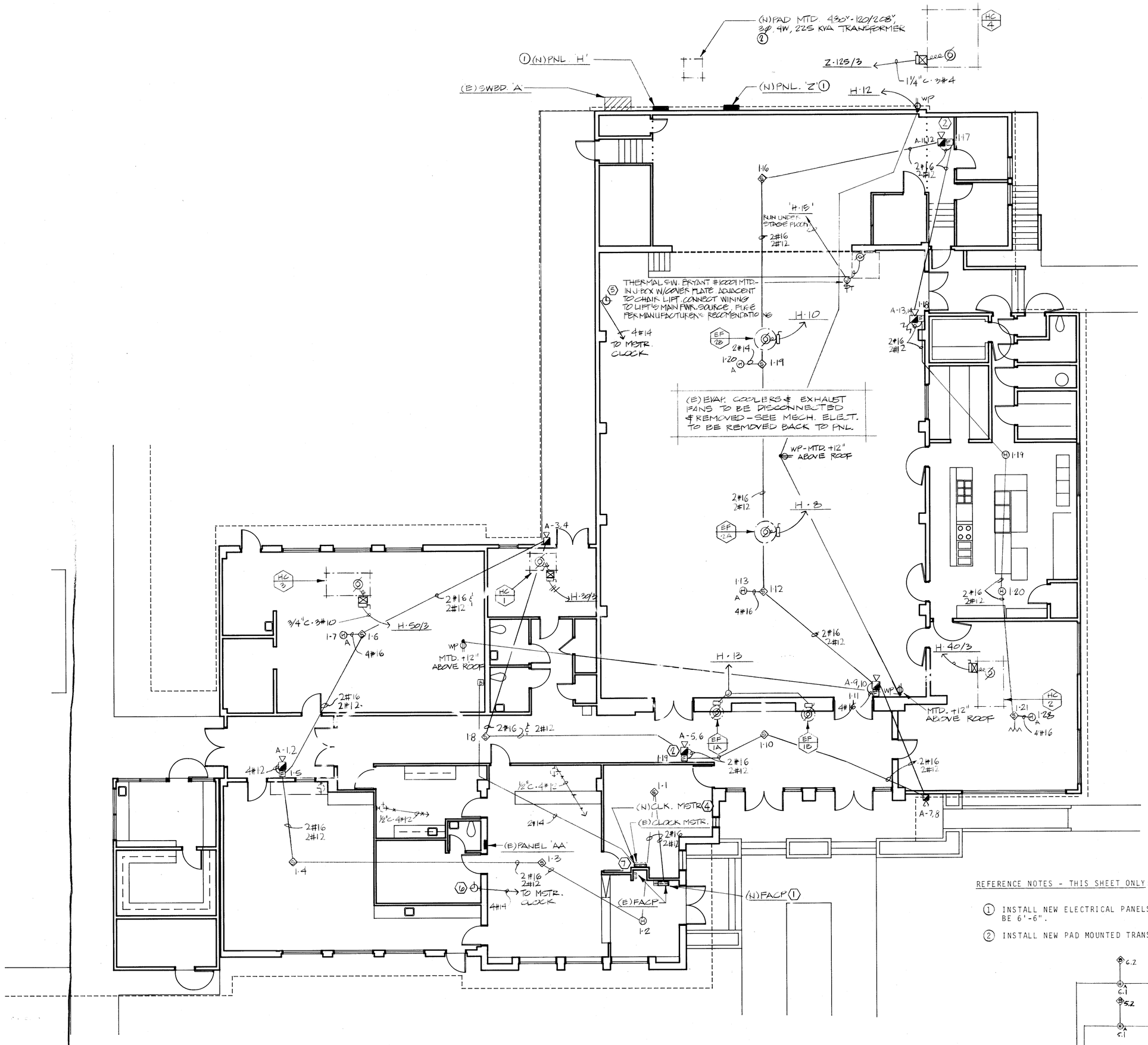

BLDG. 100
POWER & SIGNAL FLOOR PLAN
1/8"=1'-0"

(N) PANEL 'Z' — TYPE NEMA 3R

CIRCUIT WATTAGE ØA	ØB	ØC	USE	LOAD-TYPE LT	RC	HT	MO	CB	CB	LT	RC	HT	MO	USE	CIRCUIT WATTAGE ØA	ØB	ØC
1000			SPARE					20	20					SPARE	1000		
	1200															1200	
		1200	SPACE											SPACE			1200
6840			HC-4					60/3						SPARE TRANSF.	9700		
	6840															9700	
		6840															9700
7840	7840	7840	SUB-TOTAL											SUB-TOTAL	9700	9700	9700

VOLTS 480/277V 3Ø 4W MAIN 400/3
FEEDER 3C-4#500KCMCU MTG SURF.
BUS 400A CU
SYSTEM SHORT CIRCUIT RATING (SYM)

LOAD SUMMARY

			ØA	ØB	ØC
LIGHTING		TOTAL	7840	7840	7840
RECEPTACLE		TOTAL	9700	9700	9700
HEATING		AMPS			
MOTOR			240		
TOTAL					

(N) PANEL 'H' — TYPE NEMA 3R

CIRCUIT WATTAGE ØA	ØB	ØC	USE	LOAD-TYPE LT	RC	HT	MO	CB	CB	LT	RC	HT	MO	USE	CIRCUIT WATTAGE ØA	ØB	ØC
1600			HC-1					30/3	30/3					HC-3	2700		
	1600															2700	
		1600															2700
2160			HC-2					40/3	20					EF-2A	900		
	2160													EF-2B		900	
		2160															720
850			EF1A & EF1B					40/3						SPARE	400		
	400															400	
		400	SPARE														400
400															400		
4410	4160	4160	SUB-TOTAL											SUB-TOTAL	4400	4000	4720

VOLTS 120/208V 3Ø 4W MAIN MLO
FEEDER 1¼"C-4#2+1#3 MTG SURF.
BUS 100A CU
SYSTEM SHORT CIRCUIT RATING (SYM)

LOAD SUMMARY

			ØA	ØB	ØC
LIGHTING		TOTAL	4410	4160	4160
RECEPTACLE		TOTAL	2160	2400	2560
HEATING		AMPS		73	79
MOTOR					
TOTAL					

REFERENCE NOTES - THIS SHEET ONLY:

1. INSTALL NEW ELECTRICAL PANELS AT BUILDING EXTERIOR, TOP OF PANEL TO BE 6'-6".
2. INSTALL NEW PAD MOUNTED TRANSFORMER - SEE LINE DIAGRAM.

FIRE ALARM/CLOCK NOTES - THIS SHEET ONLY:

1. REPLACE EXISTING FACP WITH NEW "FARADAY" MODEL 7800 - SEE SPECIFICATIONS FOR COMPLETE DESCRIPTION.
2. REPLACE EXISTING FIRE ALARM PULL STATION WITH NEW "FARADAY" MODEL #F1G1 PULL STATIONS - TYPICAL THROUGHOUT SITE - SEE SPECIFICATIONS FOR COMPLETE DESCRIPTION.
3. FIRE ALARM WIRING COLORS SHALL BE:
   IN.TIATING LOOP - (1) YELLOW, (1) BLUE
   AUDIBLE SIGNAL LOOP - (1) RED, (1) BLACK
   AC POWER - (1) BLACK, (1) WHITE
4. REPLACE EXISTING MASTER CLOCK WITH NEW "FARADAY" SYSTEM 1402 - SEE SPECIFICATIONS FOR COMPLETE DESCRIPTION.
5. REPLACE EXISTING CLOCKS WITH NEW "FARADAY" MODEL 2300 SERIES CLOCKS. CLOCKS TO BE SURFACE MOUNTED, ROUND TYPE.
6. INSTALL NEW CLOCK PER SPECIFICATIONS.
7. FEED NEW MASTER CLOCK WITH NEW 120V CIRCUIT FROM EXISTING PANEL "AA".

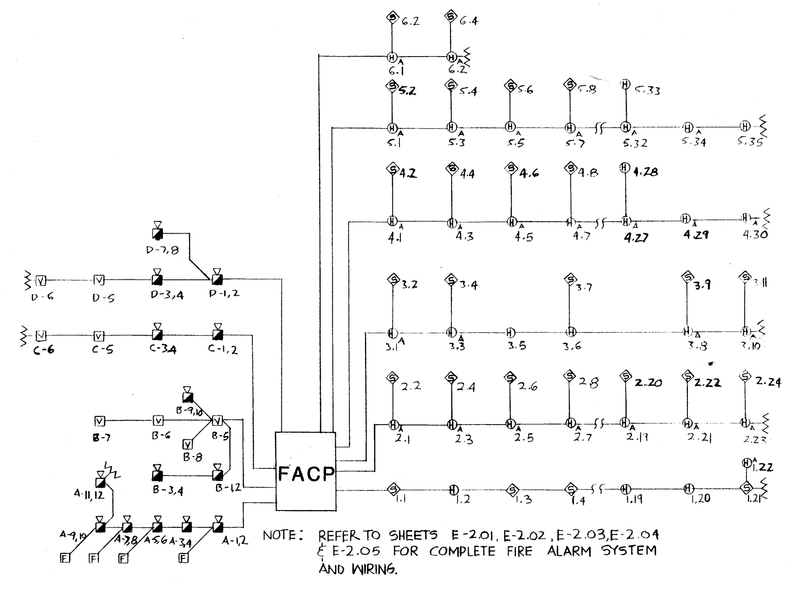

FIRE ALARM RISER DIAGRAM

INTERSTATE ENGINEERING, INC.
377 East Bethard Avenue, Fresno, CA 93701 - (209) 486-1193
James W. Grafton, P.E. 45101

ROOSEVELT SCHOOL MODERNIZATION

FOR

BAKERSFIELD CITY SCHOOL DISTRICT

BUILDING 100

842P--100

bfgc architects planners inc.
p.o. box 9698 bakersfield california 93389-9698
31 south real road 93309 (805) 832 8122
C-3132 C-6564 C-8021 C-8702

job no.	88-142
date	20JAN1989
drawn by	RDW
chk'd by	CS
copyright	1988

E 2.01