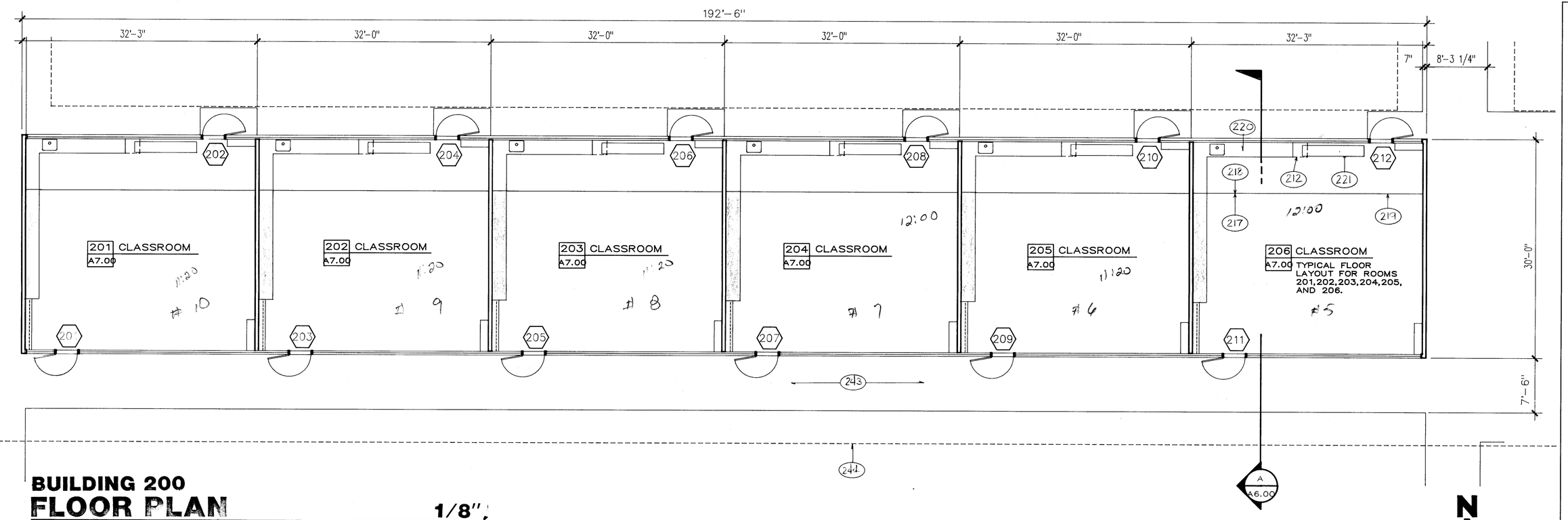

BUILDING 200
FLOOR PLAN 1/8"

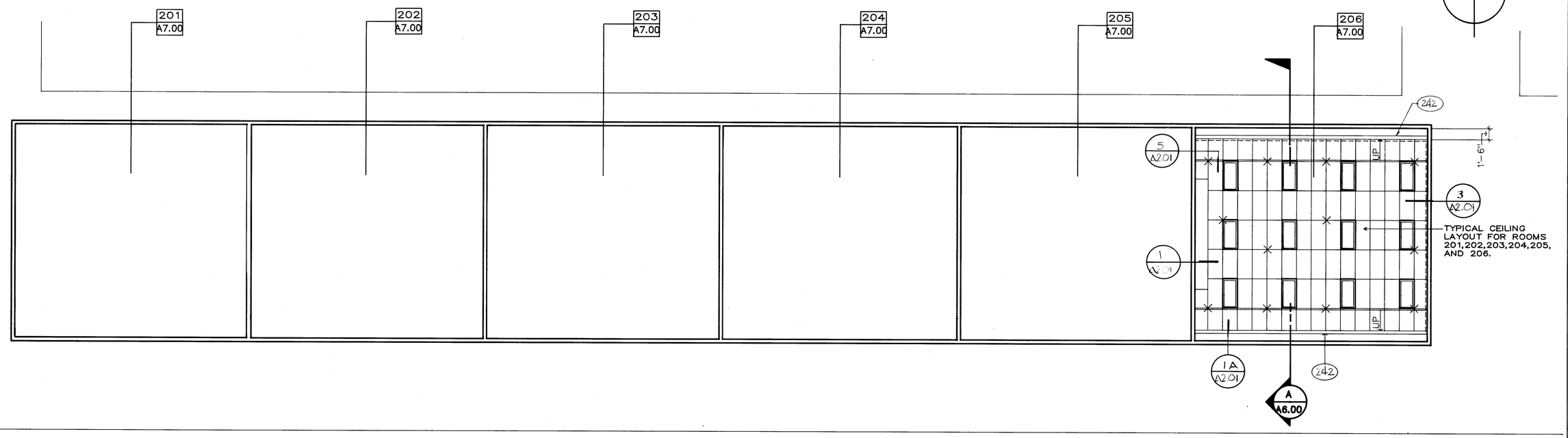

BUILDING 200
REFLECTED CEILING PLAN 1/8"

ADDITIVE ALTERNATE NO. 1
ADD ALL TACKBOARDS AND CHALKBOARDS AS SHOWN ON INTERIOR ELEVATIONS. EXISTING TO REMAIN.
NOTE: UNDER THE BASE BID, CHALK AND TACKBOARDS ARE EXISTING TO REMAIN. EXISTING TRIM SHALL BE STRIPPED AND PAINTED

ADDITIVE ALTERNATE NO 2
REPLACE EXISTING EASELS IN CLASSROOMS WITH NEW CABINETS.
NOTE: FINISH SHALL STRIPPED AND PAINTED IN ROOMS 501 AND 502

KEY NOTES

A. NOT ALL KEYNOTES ARE BEING USED IN THIS SHEET. SEE OTHER FLOOR PLANS.

B. ALL DAMAGED AREAS ON CEILING, WALLS, AND/OR FLOORS, CAUSED BY REMOVAL WORK SHALL BE REPAIRED, PATCHED TO MATCH (E) MATERIAL, FINISHES, TEXTURE, AND/OR COLOR OF ADJACENT SURFACES.

201 REMOVE (E) STUD WALL(S) AS SHOWN.

202 SAWCUT AND REMOVE PART OF (E) CONCRETE WALL FOR WIDER DOOR OPENING.

203 SAWCUT AND REMOVE PART OF (E) CONCRETE WALL FOR MECHANICAL DUCT WORK. SEE STRUCTURAL AND MECHANICAL DRAWINGS.

204 REMOVE (E) DOOR AND DOOR FRAME.

205 REMOVE (E) WINDOW AND WINDOW FRAME.

206 REMOVE (E) DOOR AND DOOR FRAME. REPLACE WITH HOLLOW METAL DOOR AND FRAME AS SHOWN.

207 REMOVE (E) WINDOW AND WINDOW FRAME, GLASS AND GLAZING. REPLACE WITH HOLLOW METAL FRAME AS SHOWN.

208 REMOVE (E) PLUMBING FIXTURES (LAVATORIES, WATER CLOSETS, AND/OR URINALS. CAP LINES ON REUSE LINES AS PER MECHANICAL DRAWINGS.

209 REMOVE (E) TOILET PARTITIONS.

210 REMOVE (E) FLOOR MATERIAL TO EXPOSE (E) FLOOR.

211 REMOVE (E) CABINET.

212 REMOVE PART OF EXISTING CABINET AS SHOWN ON PLANS TO THE NEAREST VERTICAL STILE. PROVIDE END PANEL AND FINISH TO MATCH (E).

213 REMOVE (E) MECHANICAL UNIT. CAP LINES PER MECHANICAL DRAWING.

214 REMOVE (E) ACOUSTICAL TILE AND REPLACE WITH 12" x 12" ACOUSTICAL TILE.

215 CEILING MATERIAL TO REMAIN. PROVIDE ENAMEL PAINT.

216 REMOVE (E) CEILING MATERIAL IN THIS AREA ONLY AS PER STRUCTURAL DRAWINGS.

217 CARPET.

218 SHEET VINYL.

219 CARPET EDGE STRIP.

220 REMOVE (E) COUNTER TOP AND REPLACE WITH PLASTIC LAMINATED COUNTER TOP.

221 REMOVE (E) UNIT VENTILATOR AND REPLACE WITH UNIT VENTILATOR PER MECHANICAL DRAWINGS.

222 TOILET PARTITION.

223 REMOVE THIS PORTION OF (E) FLOORING AND REPLACE WITH FLOOR MATERIAL TO MATCH (E).

224 GYPSUM BOARD.

225 HOLLOW METAL FRAME.

226 1/2" DIAMETER RED HEAD ANCHOR BOLT 4" LONG.

227 3/8" DIAMETER RED HEAD ANCHOR BOLT 3" LONG.

228 1/2" DIAMETER RED HEAD ANCHOR BOLT 7" LONG.

229 REMOVE (E) TRIM AND PROVIDE TRIM TO MATCH.

230 TILE.

231 WOOD SHIM AS REQUIRED.

232 PLASTER TO MATCH (E).

233 REMOVE PORTION OF (E) WALL.

234 REMOVE (E) DOOR FRAME.

235 GLASS STOP.

236 INSULATED GLASS.

237 (E) TO REMAIN.

238 METAL DRIP.

239 THRESHOLD.

240 FLOOR MATERIAL.

241 REMOVE (E) CABINET SINK WITH CABINET AS SHOWN.

242 (E) CURTAIN TRACK.

243 (E) CONCRETE WALK.

244 LINE OF ROOF OVERHAND ABOVE.

245 MECH. UNIT. SEE MECHANICAL DRAWINGS.

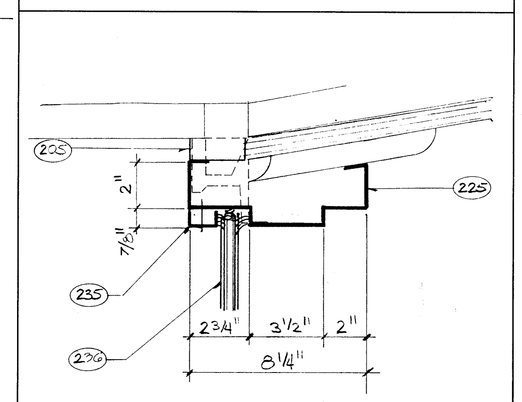

1

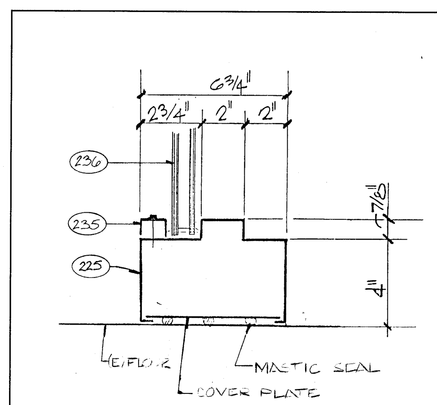

2 3"=1'-0"

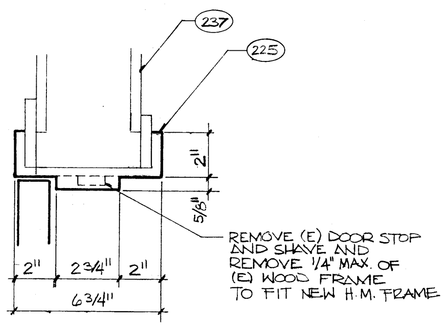

3 3"=1'-0"

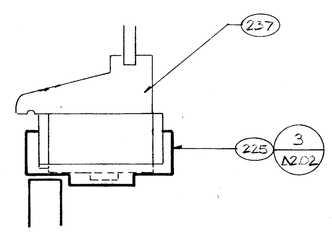

4 3"=1'-0"

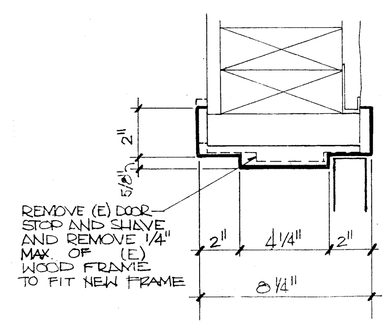

5 3"=1'-0"

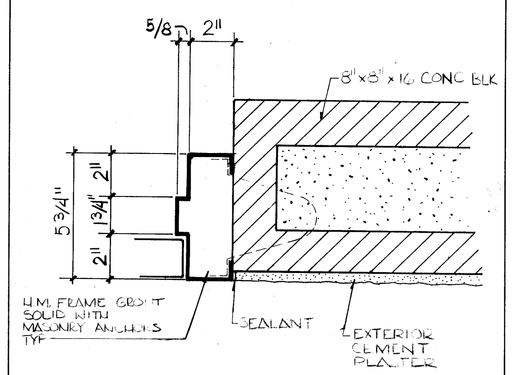

6 3"=1'-0"

CEILING LEGEND

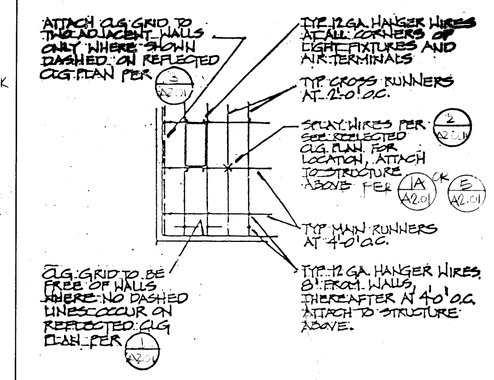

2x4 RECESSED FLUORESCENT LIGHT FIXTURE

bfgc

U/C #

ROOSEVELT SCHOOL MODERNIZATION

FOR

BAKERSFIELD CITY SCHOOL DISTRICT

BUILDING 200 FLOOR PLAN AND REFLECTED CEILING PLAN/DETAILS

bfgc architects planners inc.
p.o. box 9698 bakersfield california 93389-9698
31 south real road 93309 (805) 832 8122

D.R. Gustafson

C-3132 *C-6564 C-8021 C-8702

job no.	88-142
date	20 JAN 1989
drawn by	T. WARREN
chk'd by	SCOTT
copyright	1989

A 2.02