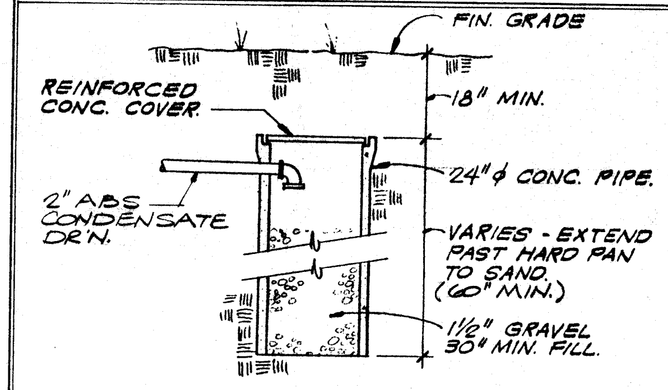

DRYWELL

DETAIL A/P.4
NO SCALE

NOTE: WHERE CONCRETE OR A.C. PAVING OCCURS EXTEND CONC. PIPE TO FINISH GRADE & PROVIDE TRAFFIC WEIGHT STEEL COVER, PROVIDE CAST CONC. APRON AROUND TOP OF PIPE / COVER

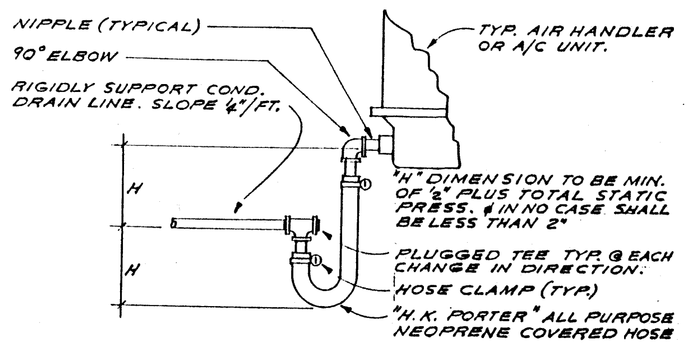

TYP. CONDENSATE DRAIN CONNECTION

ALL VENTING IF REQUIRED BY CODE MUST BE DONE DOWN-STREAM FROM TRAP.

DETAIL B/P.4
NO SCALE

NOTE: DRAIN & UNIT VENTILATOR SIMILAR EXCEPT INSTALLED INSIDE CABINET - PROVIDE C.P. ESCUTCHEON & WALL PENETRATION (TYP.)

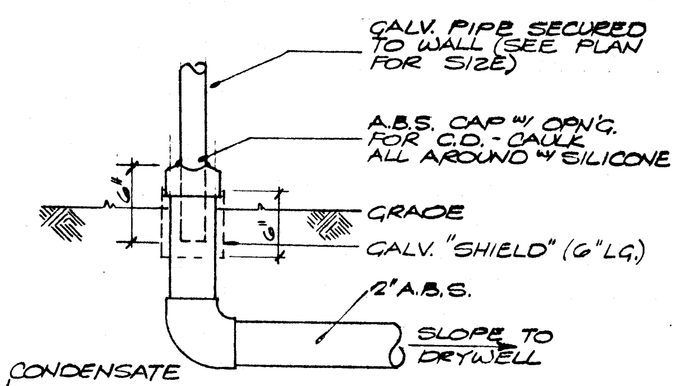

A.B.S. CONDENSATE DRAIN

DETAIL C/P.4
NO SCALE

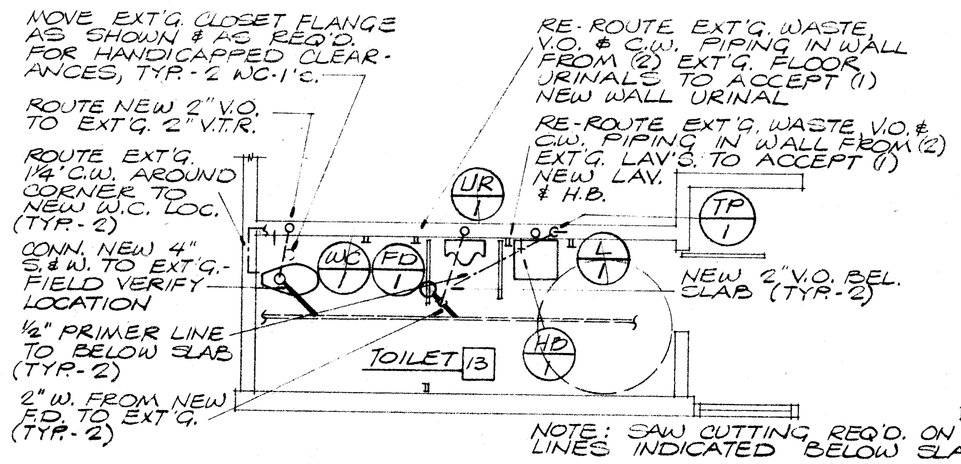

NOTE: SAW CUTTING REQ'D. ON ALL NEW LINES INDICATED BELOW SLAB.

PLUMBING FLOOR PLAN D/P.4
SCALE: 1/4" = 1'-0"

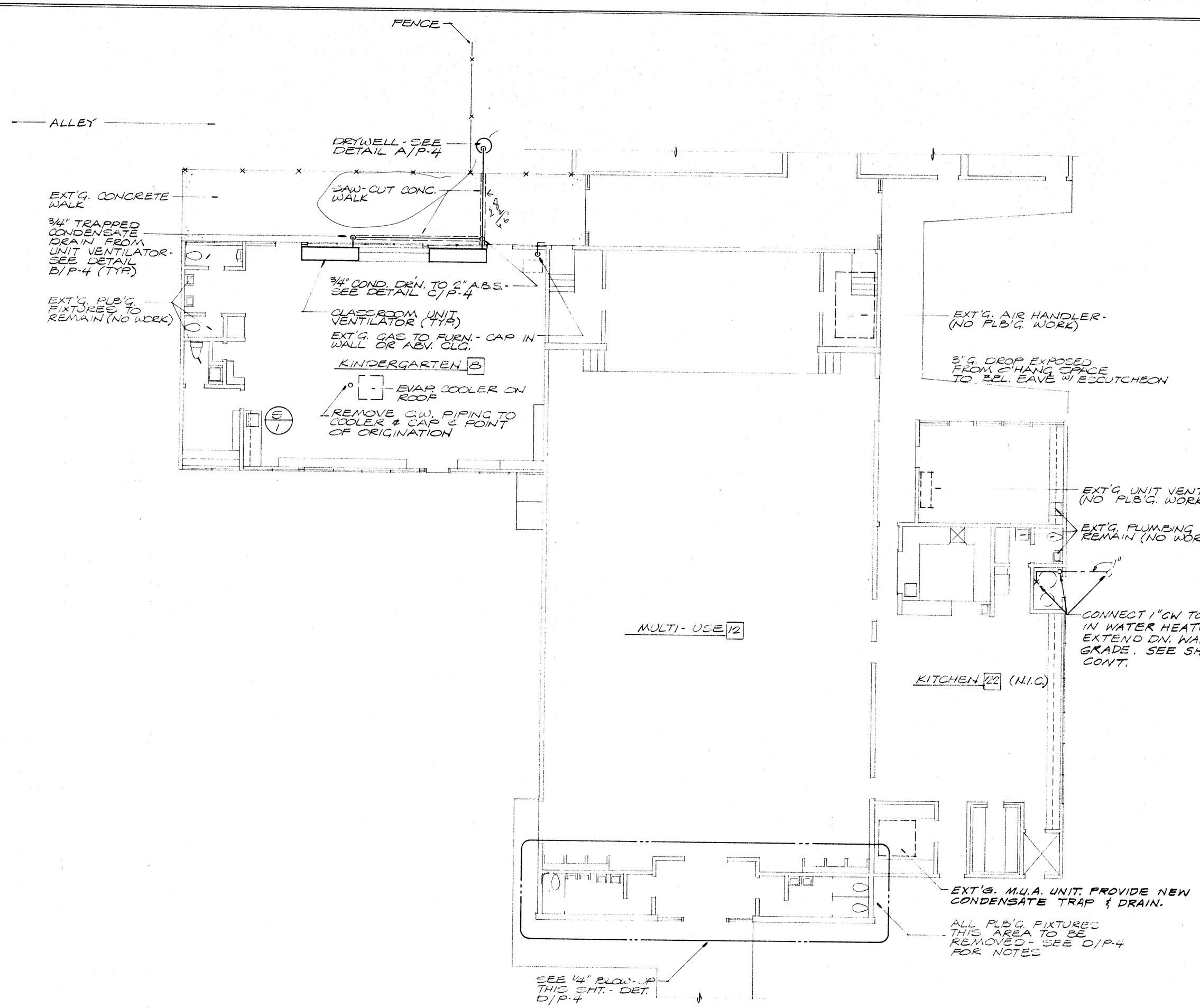

PLUMBING FLOOR PLAN
SCALE: 1/8" = 1'-0"
(UNIT "A-3")

TITLE 24 & 1979 UBC

GENERAL NOTES:

1. FOR PIPE TRENCH AND PENETRATIONS SEE DETAIL 7 IN SPECIFICATIONS.

date 2-26-90
revisions

WILLIAM PENN SCHOOL MODERNIZATION
BAKERSFIELD CITY SCHOOL DISTRICT
BAKERSFIELD, CALIFORNIA

FRANK MITCHELL M12910 EXPIRES 9/1/90
JOHN FRANK MITCHELL, INC.
CONSULTING MECHANICAL ENGINEERS
4444 WEST JENNIFER, SUITE 107
FRESNO, CALIFORNIA 93722
PHONE 275-2399 6738.1

Hughes Architecture Design Associates A.I.A.
2115 19th street • bakersfield, ca 93301 • (805) 322-1863
architects • planners

job number 871

sheet number
P-4
4 OF 4

BLUEPRINT SERVICE 122374