FRANKLIN ELEMENTARY SCHOOL
ONE PORTABLE CLASSROOM
BAKERSFIELD CITY SCHOOL DISTRICT
2400 TRUXTUN
BAKERSFIELD, CA

ABBREVIATIONS

ABOVE	ABV								
ABOVE FINISHED FLOOR	A.F.F.	EACH	EA.	LAMINATE	LAM.	SANITARY NAPKIN DISPENSER	S.N.D.		
ACCESSIBLE	A.C.C.	ELECTRIC	ELEC.	LAVATORY	LAV.	SANITARY NAPKIN RECEPTACLE	S.N.R.		
ACOUSTICAL	ACOUST.,ACT.	ELECTRIC DRINKING FOUNTAIN	E.D.F.	LEFT HAND	L.H.	SCHEDULE	SCH.		
ADJACENT	ADJ.	ELEVATION	ELEV.,EL.	LINOLEUM	LINO.	SEAT COVER DISPENSER	S.C.D.		
ADJUSTABLE	ADJUST.	EQUAL	EQ.	LONG	LG.	SECTION	SECT.		
AIR CONDITIONING	A/C	EQUIPMENT	EQUIP.			SHEATHING	SHTG.		
ALUMINUM	ALUM.,AL.	ESTIMATE	EST.	MACHINE BOLT	M.B.	SHEET	SHT.		
ANCHOR BOLT	AB.	EXHAUST	EXH.	MACHINE SCREW	M.S.	SHEET METAL	S.M.		
BENT ANCHOR BOLT	BAB.	EXHAUST FAN	E.F.	MANUFACTURER	MFGR.	SHEET METAL & AIR CONDITIONING CONTRACTOR NATIONAL ASSOCIATION	SMACNA		
ANODIZED	ANOD.	EXISTING	(E)	MATERIAL	MAT.,MATL.				
ARCHITECTURAL	ARCH.	EXPANSION	EXP.	MAXIMUM	MAX.				
ASPHALT CONCRETE	A.C.	EXPANSION JOINT	E.J.	MECHANICAL	MECH.	SHEET METAL SCREWS	S.M.S.		
		EXTERIOR	EXT.	MEDIUM	MED.	SHELVES	SH.		
BACKBOARD	BACKBRD.			MEMBRANE	MBNE.	SIMILAR	SML.,SIM		
BEAM	BM	FABRIC WALL COVERING	F.W.C.	METAL	MTL.	SINK	S.		
BENCH MARK	B.M.	FACE OF BLOCK	F.O.B.	METAL PLANAR CEILING	M.P.C.	SOAP DISPENSER	S.D.		
BETWEEN	BTWN.	FACE OF CONCRETE	F.O.C.	METAL TOILET PARTITION	M.T.P.	SPECIFICATION	SPEC.		
BLOCK	BLK.	FACE OF STUD	F.O.S.	MILLIMETER	MILL.	SPLASH	SPL.		
BOTTOM	BTM.,BTTM.	FACE OF WALL	F.O.W.	MINIMUM	MIN.	SPLASH BLOCK	S.B.		
BUILDING	BLDG.	FACTORY FINISH	F.F.	MISCELLANEOUS	MISC.	SQUARE	SQ.		
		FEET/FOOT	FT.	MULLION	MULL.	STAINLESS STEEL	S.S.		
CABINET	CAB.	FEMININE NAPKIN DISPOSAL	F.N.D.			STANDARD	STD.		
CADMIUM	CAD.	FIBER GLASS	F.G.,FIBERGL.	NOT IN CONTRACT	N.I.C.	STEEL	STL.		
CARPET	CPT.	FINISH	FIN.	NOT TO SCALE	N.T.S.	STORAGE	STOR.		
CARRIAGE BOLT	C.B.	FIRE EXTINGUISHER CABINET	F.E.C.	NUMBER	NO.,#	STIFFENER	STIFF.		
CAST IRON	C.I.	FIRE RATED GYP. BD.	F.R.G.B.			STRUCTURAL	STRUCT.,ST.		
CEILING	CLG.,CEL'G.	FIXED GLASS	F.G.	OPPOSITE HAND	O.H.	SUSPENDED	SUSP.		
CEILING DIFFUSER	C.D.	FLAT HEAD	F.H.	OPPOSITE	OPP.	SUSPENDED ACOUSTIC CEILING TILE	S.A.T.C.		
CEILING GRILLE	C.G.	FLOOR	FLR.	ON CENTER	O.C.	SWITCH	SW.		
CEILING REGISTER	C.R.	FLOOR DRAIN	F.D.	OPENING	OPG.				
CEMENT	CEM.	FLUORESCENT	FLUOR.	OUTSIDE DIAMETER/DIMENSION	O.D.	TELEPHONE	TEL.,TELE.		
CENTERLINE	C.L.	FOOTING	FTG.	OVAL HEAD	O.H.	THICK	THK.		
CERAMIC TILE	C.T.	FOUNDATION	FDN.	OVER (ON)	O/	THRESHOLD	THR.		
CIRCUIT	CRT.	FRAMING	FRM'G.	OVERFLOW	OVFL.	TOILET PAPER	T.P.		
CLEANOUT	C.O.			OVERHAND	OH.	TOILET PAPER HOLDER	T.P.H.		
CLEAR	CLR.	GAGE/GAUGE	GA.			TOLERANCE	TOL.		
COLD WATER	C.W.	GALVANIZE	GALV.	PAINT	PT.	TRANSFORMER	TRANS.		
COLUMN	COL.	GALVANIZED IRON	G.I.	PAIR	PR.	TYPICAL	TYP.		
COMBINATION/COMBUSTION	COMB.	GLASS	GL.	PAPER TOWEL DISPENSER	P.T.D.				
COMPOSITION, COMPOSITE	COMP.	GRAB BAR	G.B.	PLASTIC	PLAS.	UNDERWRITERS LABORATORY	U.L.		
CONCRETE	CONC.	GRADE	GR.	PLATE	PL.	UNLESS OTHERWISE NOTED	U.O.N.		
CONCRETE MASONRY UNIT	C.M.U.	GROUND	GND.	PLATED	PL'TD.	URINAL	UR.		
CONDITION	COND.	GYPSUM	GYP.	PLUMBING	PLBG.				
CONNECTION	CONN.	GYPSUM BOARD	G.B.,GYP.BD.	PLYWOOD	PLYWD.	VENTILATE/VENTILATION	VENT.		
CONSTRUCTION	CONST.			POINT	PT.	VENT. THROUGH ROOF	V.T.R.		
CONSTRUCTION JOINT	C.J.			POINT OF CONNECTION	P.O.C.	VERIFY IN FIELD	V.I.F.		
CONTINUOUS	CONT.	HARDWARE	HDW,HDWR.	POUND	LB.,#	VERTICAL	VERT.		
CONTRACTOR	CONTR.	HEAD	HD.	POUND PER SQ. FOOT	P.S.F.	VINYL COMPOSITION TILE	V.C.T.		
COORDINATE	COORD.	HEADER	HDR.	POUND PER SQ. INCH	P.S.I.	VINYL WALL COVERING	V.W.C.		
COUNTERSINK	CSK.	HEIGHT	HT.,H.			VOLUME	VOL.		
		HOLLOW METAL	H.M.	QUARTER	QTR.				
DEPARTMENT	DEPT.	HORIZONTAL	HORIZ.			WATER CLOSET	W.C.		
DEPTH, DEEP	D.	HOT WATER	H.W.	RADIUS	R.,RAD.	WATER PROOF	W.P.		
DETAIL	DET.,DTL.	HOSE BIBB	H.B.	RAINWATER LEADER	R.W.L.	WATER RESISTANT	W.R.		
DIAGONAL	DIAG.			RECEPTACLE	RECEPT.	WIDTH	W.		
DIAMETER	DIA.	INCH	IN.	REFLECTED	REFL'D.	WIRE GLASS	W.GL.		
DIMENSION	DIM.	INSIDE DIAMETER/DIMENSION	I.D.	REFRIGERATOR	REF.	WITH	W/		
DISPENSER/DISPOSAL	DISP.	INSULATION	INSUL.	REINFORCING	REINF.	WITHOUT	W/O		
DIVISION	DIV.	INTERIOR	INT.	REMOVABLE	REMOV.	WOOD	WD.		
DOOR	DR.			REQUIRED	REQ'D.	WOOD SCREWS	W.S.		
DOUBLE	DBL	JAMB	JB.	RESILIENT	RES.				
DOWN	DN.	JOINT	JT.	REVISE, REVISION	REV.				
DOWNSPOUT	D.S.			RIGHT HAND	R.H.				
DRAWING	DRWG.			ROOF DRAIN	R.D.				
DRINKING FOUNTAIN	D.F.			RUBBER TOPSET BASE	R.T.B.				

SHEET INDEX

SHT. NO.	DESCRIPTION
	GENERAL
T1.01	TITLE SHEET
	ARCHITECTURAL
A1.01	SITE PLAN
A1.02	ENLARGED SITE PLAN
A1.03	SITE DETAILS
	ELECTRICAL
E-1	SITE PLAN - ELECTRICAL
E-2	POWER AND SIGNAL PLAN
E-3	FIRE ALARM PLAN
E-4	DETAILS AND SYSTEM DIAGRAMS
	STOCKPILE # 04-105455 - 24'x40' RELOCATABLE BUILDING BY "MODTECH INC." (PC-76)
A.0	TITLE SHEET
A1.1	FLOOR PLAN
A4.01	EXTERIOR ELEVATIONS
F1.0	FOUNDATION PLAN (PC# 04-113776)
F2.0	FOUNDATION DETAILS (PC# 04-113776)
S1.2	FLOOR FRAMING DETAILS
E1.03	ELECTRICAL PLAN
R1.02	RAMP/STAIRS DETAILS
R5.01	RAMP/LANDING PLAN

SCOPE OF WORK

- RELOCATION OF (1) PORTABLE CLASSROOM BUILDINGS AND METAL RAMPS FROM STOCKPILE AND CONSTRUCTION OF UTILITY SERVICES ON AN EXISTING ELEMENTARY SCHOOL CAMPUS.
- CONSTRUCTION OF WOOD FOUNDATIONS FOR (1) PORTABLE BUILDINGS

GENERAL NOTES

1. ALL WORK SHALL CONFORM TO TITLE 24, CALIFORNIA CODE OF REGULATIONS
2. CHANGES MADE TO THE APPROVED DRAWINGS AND SPECS SHALL BE MADE BY ADDENDUM OR C.C.D., APPROVED BY DSA AS REQUIRED BY SECTION 4-338, PART 1, TITLE 24, C.C.R.
3. REFER TO RELOCATABLE BUILDING MANUFACTURER'S DRAWINGS FOR ALL INFORMATION REGARDING THE RELOCATABLE BUILDINGS

VICINITY MAP

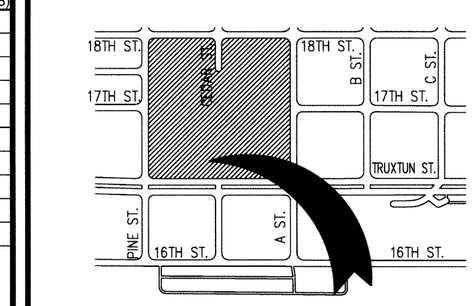

BAKERSFIELD CITY SCHOOL DISTRICT

ONE PORTABLE CLASSROOM
2400 TRUXTUN
BAKERSFIELD, CA

BUILDING DATA

OCCUPANCY = E
TYPE OF CONSTRUCTION = VB (NON-SPRINKLERED)

TEMP CLASSROOMS

4 (E) CLASSROOMS @ 960 S.F. (24'x40') EA. = 3,840 S.F.
1 (N) CLASSROOMS @ 960 S.F. (24'x40') EA. = 960 S.F.
TOTAL = 4,800 S.F.

PER 2013 C.B.C. TABLE 503:
ALLOWABLE AREA = 9,500 S.F.

4,800 PROPOSED < 9,500 ALLOWABLE = OK

INSPECTOR OF RECORD

THIS PROJECT REQUIRES A CLASS 4 INSPECTOR. THE INSPECTOR OF RECORD SHALL BE DSA APPROVED AND CONFORM TO THE CLASSIFICATION CRITERIA AS PROVIDED IN INTERPRETATION OF REGULATIONS (IR) A-7, DATED JULY 17, 2013

THE INSPECTOR SHALL BE EMPLOYED BY THE DISTRICT AND APPROVED BY THE RESPONSIBLE ARCHITECT.

APPLICABLE CODES:

COMPLY WITH PART 1, TITLE 24, 2013 CCR.

A COPY OF TITLE 24 SHALL BE ON SITE AT ALL TIMES. CONSTRUCTION SHALL COMPLY WITH TITLE 24 CALIFORNIA CODE OF REGULATIONS. INCLUDING THE FOLLOWING:

TITLE 24, CCR, PART 2, 2013 CBC
(2012 IBC, WITH CALIFORNIA AMENDMENTS).

TITLE 24, CCR, PART 3, 2013 CEC
(2011 NEC, WITH CALIFORNIA AMENDMENTS).

TITLE 24, CCR, PART 4, 2013 CMC
(2012 UMC, WITH CALIFORNIA AMENDMENTS).

TITLE 24, CCR, PART 5, 2013 CPC
(2012 UPC, WITH CALIFORNIA AMENDMENTS).

TITLE 24, CCR, PART 6, 2013 CEC

TITLE 24, CCR, PART 9, 2013 CFC
(2012 IFC, WITH CALIFORNIA AMENDMENTS).

TITLE 19, CCR.

NFPA 72, 2013 EDITION
(AS PER CA AMENDMENTS)

ARCHITECT'S STATEMENT

ARCHITECT'S STATEMENT FOR PLANS PREPARED BY OTHER LICENSED DESIGN PROFESSIONALS AND/OR CONSULTANTS

THESE DRAWINGS AND/OR SPECIFICATIONS AND/OR CALCULATIONS FOR THE ITEMS LISTED IN THE SHEET INDEX AND CHECKED BELOW HAVE BEEN PREPARED BY OTHER DESIGN PROFESSIONALS OR CONSULTANTS WHO ARE LICENSED AND/OR AUTHORIZED TO PREPARE SUCH DOCUMENTS IN THIS STATE. THESE DOCUMENTS HAVE BEEN EXAMINED BY ME FOR DESIGN INTENT AND HAVE BEEN FOUND TO MEET THE APPROPRIATE REQUIREMENTS OF TITLE 24, CALIFORNIA CODE OF REGULATIONS AND THE PROJECT SPECIFICATIONS PREPARED BY ME.

THE ITEMS CHECKED BELOW ARE ACCEPTABLE FOR INCORPORATION INTO THE CONSTRUCTION OF THIS PROJECT FOR WHICH I AM THE INDIVIDUAL DESIGNATED TO BE IN GENERAL RESPONSIBLE CHARGE (OR FOR WHICH I HAVE DELEGATED RESPONSIBILITY FOR THIS PORTION OF THE WORK.)

SEE THE SHEET INDEX ON THIS SHEET FOR DRAWINGS OTHER THAN ARCHITECTURAL.

APPLICABLE:

☐ ~~STRUCTURAL~~ ☐ ~~PLUMBING~~ ☐ ~~MECHANICAL~~ ☒ ELECTRICAL
☒ PORTABLE MANUFACTURER ☐ ~~CIVIL~~

SIGNATURE OF THE ARCHITECT/ENGINEER — DATE 7/20/16
NAME, TITLE, AFFILIATION:
PROJECT ARCHITECT, ARCHITECT, INTEGRATED DESIGNS BY SOMAM, INC

C-28966 — LICENSED NUMBER
05-31-17 — EXPIRATION DATE

Ownership of Documents
This document, the ideas and designs incorporated herein, as an instrument of Professional Service is the property of Integrated Designs by SOMAM Inc. and is not to be used, in whole or in part for any other project without written authorization.
© COPYRIGHT 2015

integrated designs by SOMAM, Inc.
ARCHITECTURE · ENGINEERING · INTERIOR DESIGN · CONSTRUCTION MANAGEMENT
8601 N. Fresno, Suite 130 · Fresno, California 93720
Phone (559) 439-0881 Fax (559) 439-0887 E-Mail: design@somam.com
www.IntegratedDesigns.com

Revision:	Revision Description:	Rev. Date:	Revision:	Revision Description:	Rev. Date:

Sheet Title: TITLE SHEET

Project Name & Address: FRANKLIN ELEMENTARY SCHOOL ONE PORTABLE CLASSROOM
BAKERSFIELD CITY SCHOOL DISTRICT
2400 TRUXTUN BAKERSFIELD, CA

Issue Date:	Date:	Designer:	DR:	PC:
ISSUE DATE	07/15/16	--	--	PC INITIALS

Agency Approval Stamp:

File No. 15-6
IDENTIFICATION STAMP
DIV. OF THE STATE ARCHITECT
07 1178 50
AC
DATE 8-22-2016
ACS: Johnson Chen

Stamp(s): FLS: Andreas Michael
SSS: Ging Song Chang

LICENSED ARCHITECT CURTIS E. FLYNN No. C 28966 STATE OF CALIFORNIA

Job No.: 5229

Sheet No.: T1.01

Release: -

G:\2016frs\16-5229 Franklin Elementary\Sheets\T1.01 TITLE SHEET.dwg RICHARD DELLANINI

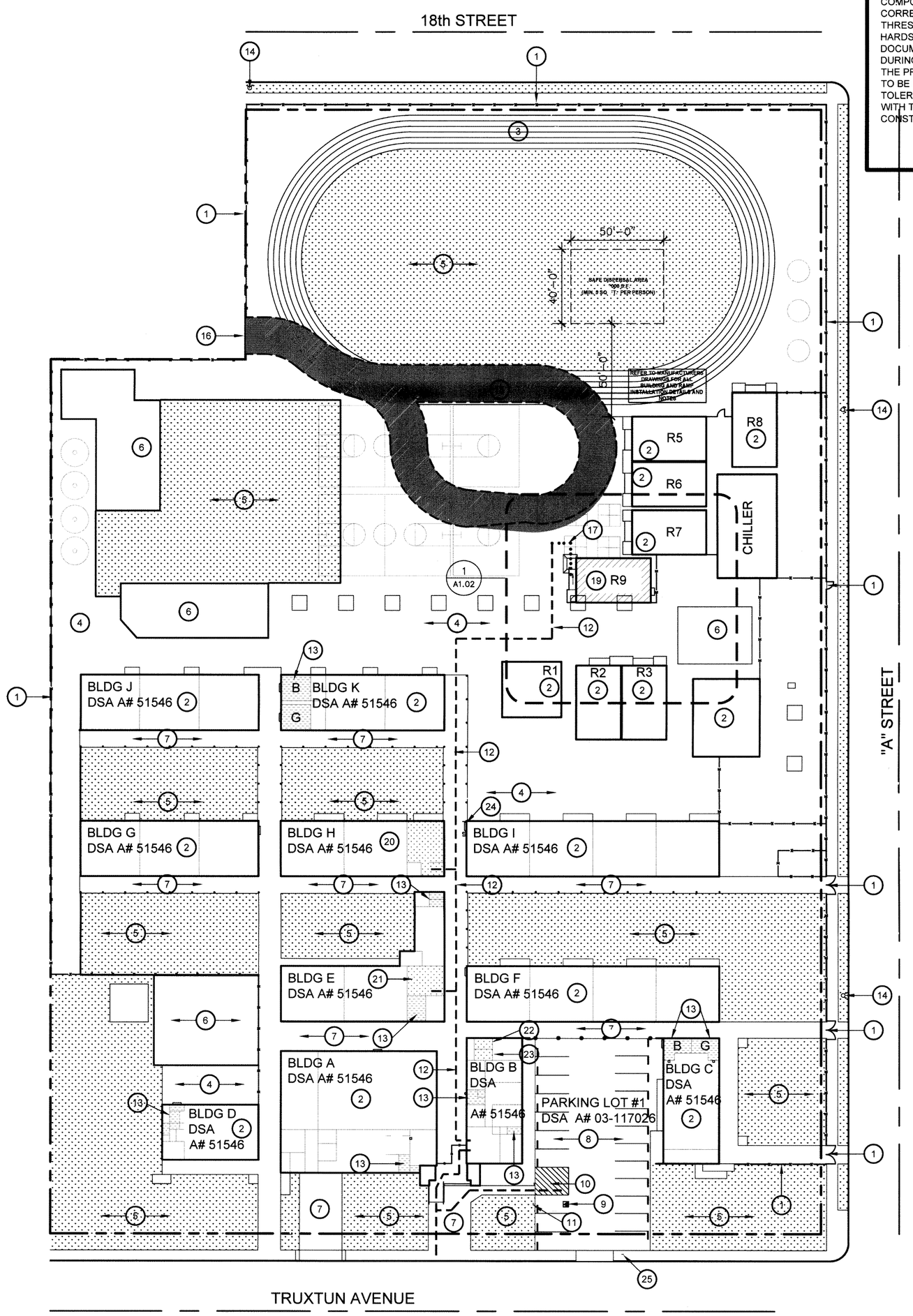

OVERALL SITE PLAN

ONE PORTABLE CLASSROOM

SCALE: 1" = 40'

ACCESSIBILITY NOTES

THE PATH OF TRAVEL (P.O.T.) IDENTIFIED IN THESE CONSTRUCTION DOCUMENTS IS COMPLIANT WITH THE CURRENT APPLICABLE CALIFORNIA BUILDING CODE ACCESSIBILITY PROVISIONS FOR PATH OF TRAVEL REQUIREMENTS FOR ALTERATIONS, ADDITIONS AND STRUCTURAL REPAIRS. AS PART OF THE DESIGN OF THIS PROJECT, THE P.O.T. WAS EXAMINED AND ANY ELEMENTS, COMPONENTS OR PORTIONS OF THE P.O.T. THAT WERE DETERMINED TO BE NONCOMPLIANT 1) HAVE BEEN IDENTIFIED AND 2) THE CORRECTIVE WORK NECESSARY TO BRING THEM INTO COMPLIANCE HAS BEEN INCLUDED WITHIN THE SCOPE OF THIS PROJECT'S WORK THROUGH DETAILS, DRAWINGS AND SPECIFICATIONS INCORPORATED INTO THESE CONSTRUCTION DOCUMENTS. ANY NONCOMPLIANT ELEMENTS, COMPONENTS OR PORTIONS OF THE P.O.T. THAT WILL NOT BE CORRECTED BY THIS PROJECT BASED ON VALUATION THRESHOLD LIMITATIONS OR A FINDING OF UNREASONABLE HARDSHIP ARE SO INDICATED IN THESE CONSTRUCTION DOCUMENTS.
DURING CONSTRUCTION, IF P.O.T. ITEMS WITHIN THE SCOPE OF THE PROJECT REPRESENTED AS CODE COMPLIANT ARE FOUND TO BE NONCONFORMING BEYOND REASONABLE CONSTRUCTION TOLERANCES, THEY SHALL BE BROUGHT INTO COMPLIANCE WITH THE CBC AS A PART OF THIS PROJECT BY MEANS OF A CONSTRUCTION CHANGE DOCUMENT.

ARCHITECT HAS INSPECTED THE PATH OF TRAVEL (P.O.T.) AS INDICATED ON THE PLANS AND HAS FOUND IT TO BE, OR HAS INDICATED ON THE PLANS REMEDIAL WORK WHICH WOULD CAUSE IT TO BE, A BARRIER-FREE ACCESSIBLE ROUTE:

- AT LEAST 48" IN WIDTH; OR AS APPROVED BY CODE
- FREE OF ABRUPT LEVEL CHANGES EXCEEDING $\frac{1}{4}$" IF BEVELED AT 1:2 MAX SLOPE, OR VERTICAL LEVEL CHANGES EXCEEDING $\frac{1}{2}$"
- WITH A FIRM, STABLE, AND SLIP RESISTANT WALKING SURFACE
- WITH A RUNNING SLOPE OF 1:20 (5%) OR LESS AND WITH A CROSS SLOPE OF 1:50 (2%) OR LESS OR A RAMP WITH A RUNNING SLOPE OF 1:12 (8.33%) AND A CROSS SLOPE OF 1:50 (2%) WITH APPROPRIATE REQUIREMENTS AS DETAILED WITHIN THIS SET OF DOCUMENTS.
- IS FREE OF OVERHEAD OBSTRUCTIONS WITHIN 80" ABOVE THE WALKING SURFACE
- IS FREE OF OBJECTS WHICH PROTRUDE MORE THAN 4" BETWEEN THE HEIGHTS OF 27" AND 80" ABOVE THE WALKING SURFACE

Franklin
Page 1 of 1

California Water Service Company
Fire Flow Test

Test Date: 8/26/2015 Test Time: 10:15 Approved Date:
District: BAKERSFIELD Zone: Low Plat: 31-35
General Location:
Address: 2400 Truxtun AVE
Cross Street: 17th ST
Requested By: Bakersfield City School District
Purpose Of Test: Fire
Conducted By: Jack Moore and Joel Huntington
Witnessed By C.W.S. Co: Dan Perez
Others:

Outlet No.	Size Outlet	PITOT	Observed	Static Pressure	Residual Pressure	Flow Observed	Flow Avail.(
Location 1 Hydrant #: 2550 Address: 100 yards N 17th St on A St							
1	4	24	2104	72	58	2104	4274
2	0	0	0				
3	0	0	0				
4	0	0	0				
			Total Flow Observed Available @20:			2104	4274

Remarks: Fire Flow 2110 gpm
Static/Residual Location: On A St 400' N of Truxtun

Note:
Regardless of the results of this test, California Water Service Company assumes no liability be that stated in the following excerpt from the P.U.C. Tariff Schedule: "The utility (California Wate Service Company) will supply only such water at such pressure as may be available from time as a result of its normal operation of the system."

http://engwebserver/fireflow/QRYFIREFLOWDETAILS.ASP?ID=16715 9/1/2015

GENERAL NOTES

A. GENERAL CONTRACTOR SHALL FIELD VERIFY ALL SITE CONDITIONS PRIOR TO BID. IF ANY DISCREPANCIES ARE FOUND, THE ARCHITECT SHALL BE NOTIFIED IN WRITING.

B. CONTRACTOR SHALL BE RESPONSIBLE FOR THE CORRECTNESS OF LAYOUTS AND ESTABLISHED LOCATIONS OF BURIED UTILITY LINES. ANY UTILITIES REQUIRING RELOCATION SHALL BE THE RESPONSIBILITY OF THE GENERAL CONTRACTOR CONTACT APPLICABLE GOVERNING AGENCIES REGARDING ARRANGEMENT AND COORDINATION OF WORK.

C. GENERAL CONTRACTOR WILL BE RESPONSIBLE FOR ANY COMPACTION RETEST DUE TO INITIAL FAILURE.

D. PROJECT INSPECTOR SHALL BE EMPLOYED BY THE OWNER, APPROVED BY THE RESPONSIBLE ARCHITECT AND DSA.

E. A COPY OF TITLE-24, ALL PARTS APPLICABLE, TO BE KEPT AT THE JOB SITE AT ALL TIMES.

F. ADDENDA SHALL BE SIGNED BY THE ARCHITECT (RESPONSIBLE IN CHARGE) AND APPROVED BY DSA.

G. C.C.D.s SHALL BE SIGNED BY THE ARCHITECT (RESPONSIBLE IN CHARGE), OWNER AND APPROVED BY DSA.

H. TESTING LAB SHALL BE EMPLOYED BY THE OWNER, APPROVED BY THE RESPONSIBLE ARCHITECT AND DSA.

I. ALL WORK SURFACES DISTURBED OR DAMAGED BY THE CONSTRUCTION ACTIVITIES SHALL BE REPAIRED IN KIND, TEXTURED AND FINISHED TO MATCH ADJACENT SURFACES.

J. NEW CONCRETE WALKS SHALL HAVE SLOPES NOT TO EXCEED 1 IN 20 IN THE DIRECTION OF PATH OF TRAVEL. PROVIDE CONTROL JOINTS ("C.J.")AT 5'-0" o.c. MAX. AND EXPANSION JOINTS NOT TO EXCEED 30'-0" MAX. PROVIDE MEDIUM BROOM FINISH ON ALL WALKS.

K. ALL BUILDING AND ROOM NAMES INDICATED ON THESE CONSTRUCTION DOCUMENTS ARE "NOT" THE ACTUAL BUILDING/ ROOM SIGNAGE DESIGNATION. THE GENERAL CONTRACTOR SHALL FURNISH, INSTALL AND COORDINATE ALL REQUIRED SIGNAGE WITH THE OWNER/ARCHITECT PRIOR TO STARTING CONSTRUCTION.

L. GENERAL CONTRACTOR WILL BE RESPONSIBLE TO COORDINATE RELOCATABLE BUILDING DELIVERY DATES TO THE SCHOOL SITE WITH THE MFGR.

M. THE GENERAL CONTRACTOR SHALL CONSTRUCT ALL NEW RELOCATABLE BUILDING FOUNDATIONS AS PER THE RELOCATABLE BUILDING MANUFATCTURER'S DRAWINGS AND SPECIFICATIONS.

N. THE GENERAL CONTRACTOR SHALL BE RESPONSIBLE TO PROVIDE ALL HOOK-UPS TO THE RELOCATABLE BUILDINGS AFTER INSTALLATION HAS BEEN COMPLETED BY THE MANUFACTURER.

O. 5'-0" DEEP x 5'-0" WIDE MINIMUM LANDINGS AT DOORWAYS SHALL BE AS DETAILED AND SHALL HAVE SLOPES (IN ANY DIRECTION) OF NOT GREATER THAN 1/4 IN 12 SLOPE. SLOPES SHALL BE AWAY FROM DOORWAYS.

P. GENERAL/SITE CONTRACTOR SHALL FIELD VERIFY THAT EXISTING PATH OF TRAVEL (P.O.T.) IS A MINAMUM OF 4'-0" WIDE AND IS SLIP RESISTANT. IF IT IS NOT, THEN THE CONTRACTOR SHALL NOTIFY THE ARCHITECT OF RECORD AND A REMEDY OR ALTERNATE P.O.T. WILL BE PROVIDED.

Q. THE MAXIMUM DROP BETWEEN EXISTING FINISHED GRADES AND THE TOP OF THE P.O.T. SHOULD NOT EXCEED 4". IF IT DOES, PROVIDE THE NECESSARY WARNING CURB PER CBC SEC. 11B-303.5.

KEYNOTES

1. EXISTING CHAIN LINK FENCE AND GATE TO REMAIN
2. EXISTING BUILDING TO REMAIN, NO WORK
3. EXISTING TRACK STRIPING TO REMAIN
4. EXISTING A.C. PAVING TO REMAIN
5. EXISTING TURF TO REMAIN, NO WORK
6. EXISTING SAND BOX PLAY AREA TO REMAIN
7. EXISTING CONCRETE WALK WITH MEDIUM BROOM FINISH TO REMAIN
8. EXISTING A.C. PAVED PARKING LOT TO REMAIN
9. EXISTING VAN ACCESSIBLE PARKING STALL PER DSA APP. NO. 03-117026
10. EXISTING TOW AWAY SIGN, PER DSA APP. NO. 03-117026
11. EXISTING ACCESSIBLE PARKING SIGNAGE PER DSA APP. NO. 03-117026
12. EXISTING ACCESSIBLE PATH OF TRAVEL TO REMAIN, VERIFY IN FIELD
13. EXISTING NON ACCESSIBLE RESTROOM
14. EXISTING FIRE HYDRANT TO REMAIN
15. EXISTING 20' WIDE FIRE TRUCK ACCESS LANE OVER EXISTING PAVING, APPROVED BY THE LOCAL JURISDICTION
16. EXISTING 20' WIDE CHAIN LINK FIRE TRUCK ACCESS GATE.
17. PROPOSED ACCESSIBLE PATH OF TRAVEL (P.O.T.) REFER TO ACCESSIBILITY NOTE, THIS SHEET
18. NOT USED
19. NEW MODULAR CLASSROOM ON WOOD FOUNDATION w/ METAL RAMPS INSTALLED PER MANUFACTURERS DRAWINGS
20. EXISTING ACCESSIBLE BOYS RESTROOM PER DSA APP. NO. 03-117026
21. EXISTING GIRLS RESTROOM PER DSA APP. NO. 03-117026
22. EXISTING MENS RESTROOM PER DSA APP. NO. 03-117026
23. EXISTING WOMENS RESTROOM PER DSA APP. NO. 03-117026
24. EXISTING ACCESSIBLE DRINKING FOUNTAIN PER DSA APP. NO. 03-117026
25. EXISTING SITE ENTRANCE SIGN PER DSA APP. NO. 03-117026

FLOOD ZONE INFO

FLOOD ZONE DESIGNATION:	ZONE X (0.2%)
F.I.R.M. PANEL DESIGNATION:	06029C2282E
EFFECTIVE DATE OF F.I.R.M:	09 / 26 / 2008
BASE FLOOD ELEVATION (BFE):	~400 FT.
COMMUNITY ORDINANCE SECTION:	BMC 15.74.040

PARKING CALCULATION

PARKING LOT #1, APP# 51546

TOTAL STALLS PROVIDED:	22
ACCESSIBLE STALLS REQUIRED PER CBC TABLE 11B-208.2:	1
VAN SPACES REQUIRED (1 PER 6 ADA):	1
ACCESSIBLE STALLS PROVIDED:	0 REGULAR 1 VAN 1 TOTAL

LEGEND

- INDICATES EXISTING BUILDING TO REMAIN (NO WORK)
- INDICATES NEW PORTABLE BUILDING UNDER THIS APPLICATION
- INDICATES EXISTING FIRE TRUCK ACCESS OVER AC PAVING
- INDICATES EXISTING RESTROOM UPGRADED PER DSA APP NO 03-117026
- INDICATES EXISTING NON-ACCESSIBLE RESTROOM TO REMAIN. NO WORK
- HALF-TONE DASHED LINE INDICATES EXISTING ACCESSIBLE PATH OF TRAVEL
- INDICATES PROPOSED ACCESSIBLE PATH OF TRAVEL, THIS APPLICATION

DSA **810**

LOCAL FIRE AUTHORITY REVIEW

To facilitate the Division of the State Architect's (DSA) approval of the Fire/Life Safety portion of a project, DSA requires Local Fire Authority (LFA) review of certain elements as identified in this form. Use of this form is mandatory for projects that add square footage to a campus or if any item on this form is relevant to the project. For additional information, see DSA 810 Instructions and DSA Policy 09-01.

PROJECT INFORMATION

School District/Owner: Bakersfield City School District
Project Name/School: Franklin Elementary
Project Address: 2400 Truxten

LOCAL FIRE AUTHORITY (LFA)

LFA Agency Name: Bakersfield Fire Department
LFA Reviewer Name: Ernie Medina Title: Fire Plans Examiner
Email: emedina@bakersfieldfire.us Telephone Number: 661.326.3682

I have reviewed and responded to the applicable items for this project as listed below.
Note: *Only sign this form when it is imaged onto the site plan. A loose form is not acceptable to DSA.*
LFA Reviewer's Signature: Ernie Medina **Date:** 7/28/16
Review Key: "Y" = Complies with LFA requirements "N" = Not approved (complete Section 8)
"NA" = Not applicable to the project "NR" = LFA elects not to review

	Description	Y	N	NA	NR
1	Where an elevator does not meet medical emergency service cab size, per the California Building Code (CBC), use of stairways for emergency rescue and patient transport is acceptable.			X	
2	Access roads, fire lane markings, pavers and gate entrances are in accordance with Title 19, California Code of Regulations and the California Fire Code, Chapter 5.	X			
3	Fire hydrant location and distribution complies with the California Fire Code (or see # 4).	X			
4	Fire hydrant location and distribution complies with NFPA 1142, "Alternate Means." If "NR" is checked, DSA can only approve on-site water storage as an alternate. The signature of the school district official is required to acknowledge the use of alternate means. **Signature of School District Official:** _____ **Date:** _____ **Print the School District Official's Name:** _____			X	
5	The location(s) of the proposed post indicator valve and fire department connection meet the requirements of this jurisdiction.	X			
6	The location(s) of the detector check valve assembly meet the requirements of this jurisdiction.	X			
7	Is the project located in a hazard severity zone area? (CBC, Chapter 7A, Section 701A.) ☐ Yes ☒ No Check type if "Yes": ☐ Moderate ☐ High ☐ Very High ☐ WIFA (If one of these boxes is checked, the project design must meet the requirements of Chapter 7A.)				
8	COMMENTS (note deficiencies):				

DSA 810 (rev 05-12-14) DEPARTMENT OF GENERAL SERVICES Page 1 of 1
DIVISION OF THE STATE ARCHITECT STATE OF CALIFORNIA

Ownership of Documents
This document, the ideas and designs incorporated herein, as an instrument of Professional Service is the property of Integrated Designs by SOMAM Inc. and is not to be used, in whole or in part for any other project without written authorization.
© COPYRIGHT 2015

integrated designs by SOMAM, Inc.
ARCHITECTURE · ENGINEERING · INTERIOR DESIGN · CONSTRUCTION MANAGEMENT
8011 N. Fresno, Suite 130 – Fresno, California 93710
Phone (559) 435-0081 Fax (559) 435-0887 E-Mail: design@somam.com
www.integrateddesigns.com

Revision:	Revision Description:	Rev. Date:

Sheet Title: OVERALL SITE PLAN

Project Name & Address: FRANKLIN ELEMENTARY SCHOOL ONE PORTABLE CLASSROOM
2400 TRUXTUN BAKERSFIELD CITY SCHOOL DISTRICT BAKERSFIELD, CA

Issue Date: ISSUE DATE
Date: 07/15/16
Designer: --
DR: --
PC: PC INITIALS

Agency Approval Stamp:

IDENTIFICATION STAMP
DIV OF THE STATE ARCHITECT
03
AC 117850
DATE 8-22-2016

Stamp(s):

LICENSED ARCHITECT CURTIS E. FLYNN No. C 28356 REN. 9-30-16 STATE OF CALIFORNIA

Job No.: 5229

Sheet No.: A1.01

Release: -

G:\2016frs\16-5229 Franklin Elementary\Sheets\A1.01 OVERALL SITE PLAN.dwg RICHARD DELLANINI

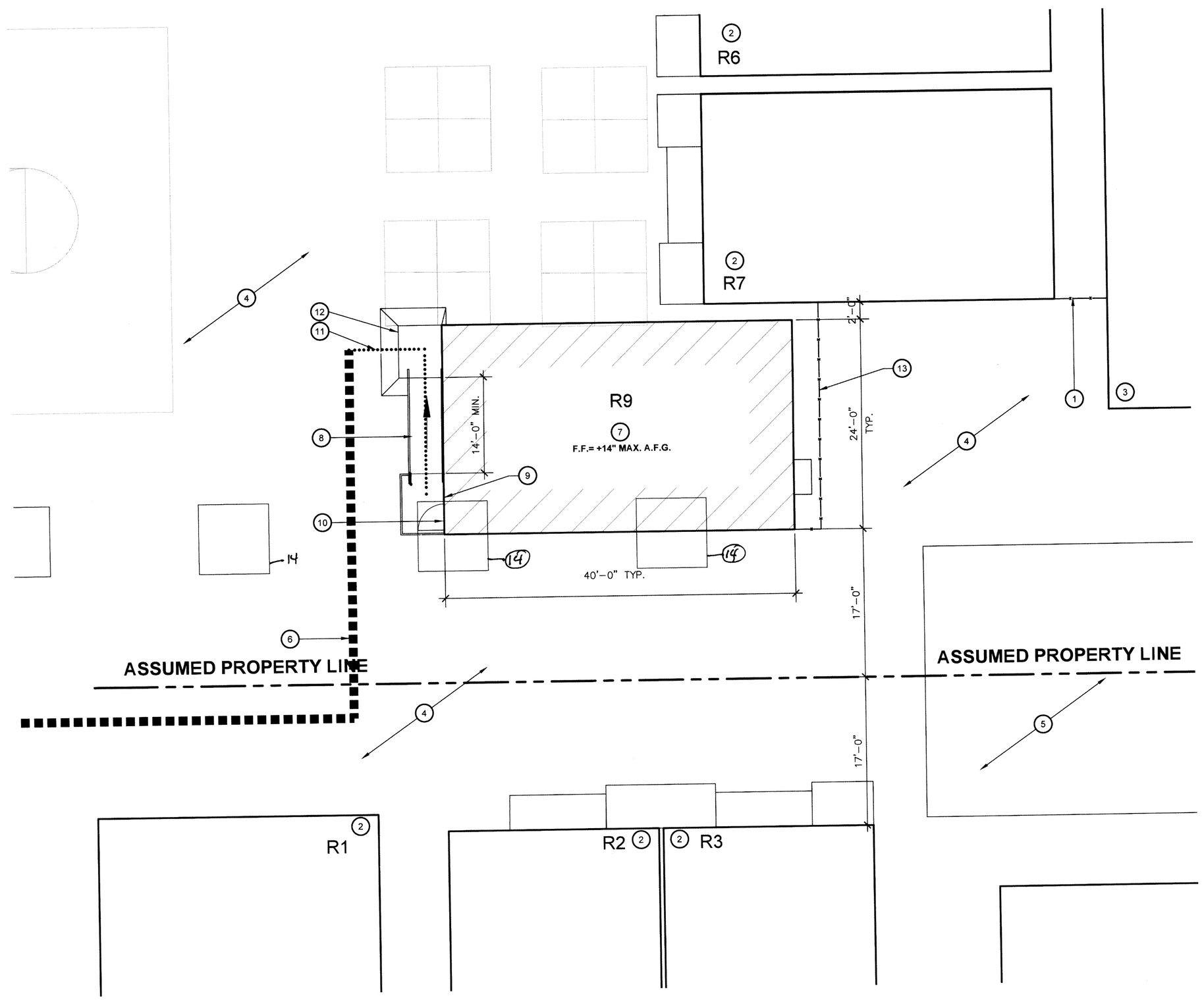

ENLARGED SITE PLAN

ONE PORTABLE CLASSROOM

SCALE: 1/8" = 1'-0"

KEY NOTES

1. EXISTING CHAIN LINK FENCE AND GATE TO REMAIN
2. EXISTING BUILDING TO REMAIN. NO WORK
3. EXISTING UTILITY ENCLOSURE TO REMAIN. NO WORK
4. EXISTING A.C. PAVING TO REMAIN. NO WORK
5. EXISTING PLAYBOX TO REMAIN. NO WORK
6. EXISTING ACCESSIBLE PATH OF TRAVEL TO REMAIN, VERIFY IN FIELD
7. NEW PORTABLE CLASSROOM BUILDINGS ON RAISED WOOD FOUNDATIONS WITH METAL RAMP SUPPLIED BY MANUFACTURER.
8. NEW METAL RAMP PER MFR. DRAWINGS, see 7/RSD1
9. NEW TACTILE EXIT SIGN PER DETAIL 2/A1.03
10. NEW ROOM IDENTIFICATION AND ISA SIGNAGE, REFER TO DETAILS 3 AND 4/A1.03
11. PROPOSED ACCESSIBLE PATH OF TRAVEL PER THIS APPLICATION. SEE ACCESSIBILITY NOTES, SHEET A1.01
12. NEW A.C. PAVED RAMP TRANSITION, SEE DETAIL 6/A1.03
13. NEW CHAINLINK FENCE, SEE DETAIL 9/A1.03
14. Asphalt striping to Remain

GENERAL NOTES

A. DETERIORATION OR EXISTING NON-COMPLIANT CONSTRUCTION:

IF ANY CONDITION IS DISCOVERED WHICH, IF LEFT UNCORRECTED, WOULD MAKE THE BUILDING NON-COMPLIANT WITH THE REQUIREMENTS OF THE EDITION OF THE CBC IN FORCE AT THE TIME OF ORIGINAL CONSTRUCTION, THE CONDITION MUST BE CORRECTED IN ACCORDANCE WITH CURRENT CODE REQUIREMENTS. A C.C.D. OR A SEPARATE SET OF PLANS AND SPECIFICATIONS DETAILING AND SPECIFYING THE REQUIRED REPAIR WORK SHALL BE SUBMITTED TO AND APPROVED BY DSA BEFORE PROCEEDING WITH THE REPAIR WORK.

*PER DSA IR 16-1, SEC. 5.4

B. CONTRACTOR SHALL ADJUST ALL DOOR CLOSERS TO A MAXIMUM OPENING FORCE OF 5 LBF

SERIAL NUMBER SCHEDULE

CLSRM	STKP #	SERIAL #
R9	04–105455	48723–001/002

SAFE DISPERAL

TEMP CLASSROOMS

4 (N) CLASSROOMS @ 960 S.F. (24'x40') EA. = 3,840 S.F.

3,840 S.F. / 20 S.F. PER OCCUPANT	= 192 OCCUPANTS
192 OCCUPANTS x 5 S.F. / OCCUPANT	= 960 S.F. REQ'D
960 S.F. PROVIDED	= OK

LEGEND

- INDICATES EXISTING BUILDING TO REMAIN (NO WORK)
- INDICATES NEW PORTABLE BUILDING UNDER THIS APPLICATION
- INDICATES PROPOSED FIRE TRUCK ACCESS OVER A.C. PAVING
- HALF-TONE DASHED LINE INDICATES EXISTING ACCESSIBLE PATH OF TRAVEL
- INDICATES PROPOSED ACCESSIBLE PATH OF TRAVEL, THIS APPLICATION

Ownership of Documents

This document, the ideas and designs incorporated herein, as an instrument of Professional Service is the property of Integrated Designs by SOMAM Inc. and is not to be used, in whole or in part for any other project without written authorization.

© COPYRIGHT 2015

integrated designs by SOMAM, Inc.
ARCHITECTURE · ENGINEERING · INTERIOR DESIGN · CONSTRUCTION MANAGEMENT
6011 N. Fresno, Suite 130 – Fresno, California 93710
Phone (559) 436–0881 Fax (559) 436–0857 E-Mail: design@somam.com
www.Integrateddesigns.com

Revision:	Revision Description:	Rev. Date:	Revision:	Revision Description:	Rev. Date:

Sheet Title: ENLARGED SITE PLAN

Project Name & Address: FRANKLIN ELEMENTARY SCHOOL ONE PORTABLE CLASSROOM
BAKERSFIELD CITY SCHOOL DISTRICT
2400 TRUXTUN BAKERSFIELD, CA

Issue Date:	Designer:	DR:	PC:
ISSUE DATE: 07/15/16	--	--	PC INITIALS

Agency Approval Stamp:

IDENTIFICATION STAMP DIV OF THE STATE ARCHITECT
03 117050
AC. DATE 8-5-2016

Stamp(s):

LICENSED ARCHITECT CURTIS E. LYNN No. C 28966 STATE OF CALIFORNIA

Job No.: 5229

Sheet No.: A1.02

Release: -

G:\2016frs\16-5229 Franklin Elementary\Sheets\A1.02 ENLARGED SITE PLAN.dwg RICHARD DELLANINI

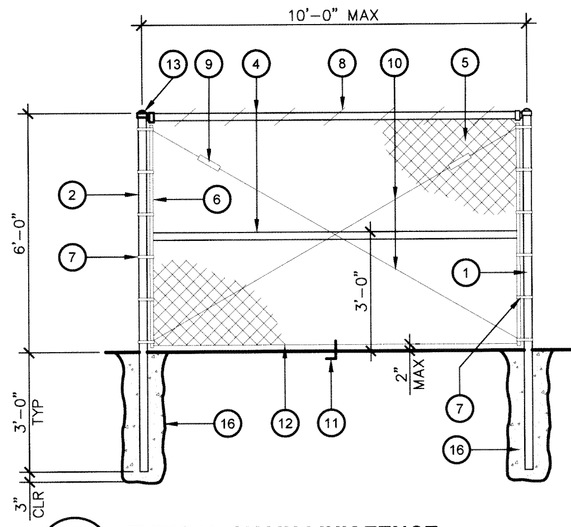

TYPICAL FENCE & GATE KEYNOTES

1. 4" O.D. GALVANIZED STEEL GATE POST (9.1 lb/ft)
2. 2 7/8" O.D. GALVANIZED STEEL END OR CORNER POST (5.79 lb/ft)
3. NOT USED
4. 1 5/8" O.D. GALVANIZED STEEL HORIZONTAL RAIL (2.27 lb/ft)
5. 2"x2" MESH x 9 GAUGE GALVANIZED FENCE FABRIC WITH KNUCKLED TOP AND BOTTOM SELVAGE. FENCE FABRIC TO BE GALVANIZED BEFORE WEAVING (GBW)
6. 1/4"x3/4" GALVANIZED STEEL STRETCHER BAR
7. GALVANIZED STEEL STRETCHER BAR TENSION BAND, MIN. OF 6 TENSION BANDS
8. 9 GAUGE (0.148" DIA.) GALVANIZED STEEL TIE WIRES OR HOG RINGS AT 15" MAX. SPACING. MIN. 8 TIE WIRES PER EACH 10" HORIZONTAL RAIL
9. GALVANIZED ADJUSTABLE TURNBUCKLE FOR 3/8" DIA. TRUSS ROD
10. NOT USED
11. 3/8"x6" GALVANIZED HOOK BOLT WITH NUT IMBEDDED IN MIDWAY BETWEEN POSTS
12. 7 GAUGE (0.177" DIA.) GALVANIZED STEEL TENSION WIRE
13. RAINPROOF CAP
14. NOT USED
15. NOT USED
16. 12"ø CONCRETE POST FOOTING (TYP.)

9 / A1.03 TYPICAL CHAIN LINK FENCE

ADY100-01

SCALE: N.T.S.

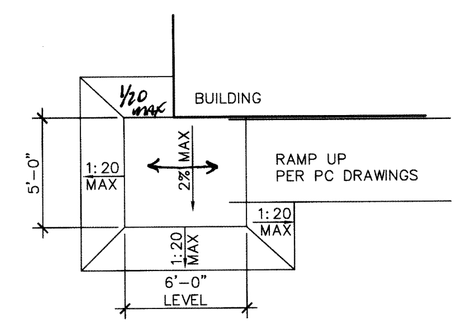

6 / A1.03 AC RAMP TRANSITION

ADA000-02

SCALE: 1' = 1'-0"

NOTES:
1. DOOR SIGNS TO BE CONSTRUCTED FROM 1/4" THICK PLASTIC OR HEAT STAMPED FIGURES. COLORS TO BE SELECTED BY ARCHITECT.
2. ATTACH SIGNS USING FOUR (4) FLATHEAD, STAINLESS STEEL, TAMPER PROOF SCREWS, (COUNTERSUNK,) AND ADHESIVE.
3. 70% CONTRAST BETWEEN CHARACTERS AND BACKGROUND

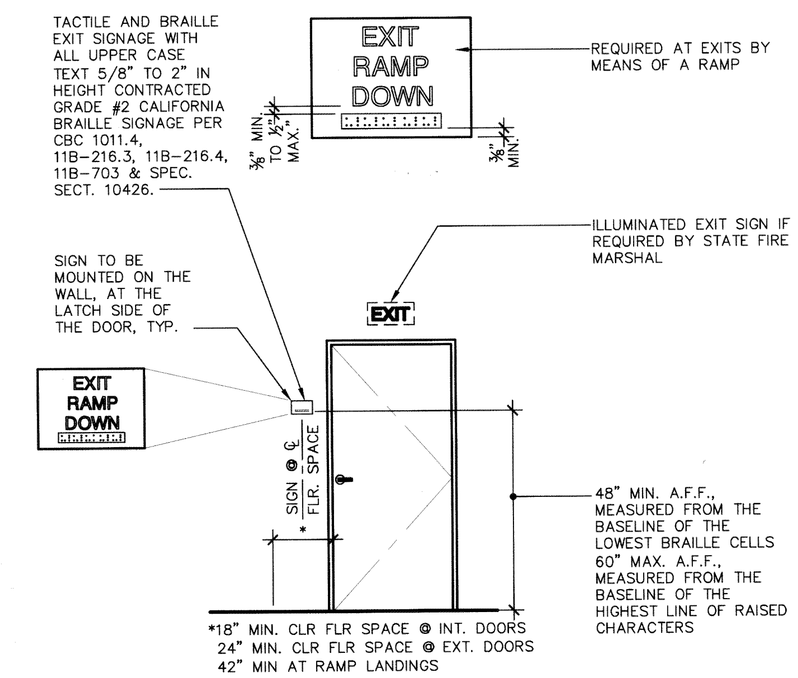

2 / A1.03 TYPICAL EXTERIOR DOOR SIGNAGE

ADX200-01

SCALE: 3/8" = 1'-0"

NOTES:
1. DOOR SIGNS TO BE CONSTRUCTED FROM 1/4" THICK PLASTIC OR HEAT STAMPED FIGURES. COLORS TO BE SELECTED BY ARCHITECT.
2. ATTACH SIGNS USING FOUR (4) FLATHEAD, STAINLESS STEEL, TAMPER PROOF SCREWS (COUNTERSUNK) AND ADHESIVE.
3. 70% CONTRAST BETWEEN CHARACTERS AND BACKGROUND PER CBC 11B-703.5.1
4. PERMANENT IDENTIFICATION FOR ROOMS AND SPACES OF A BUILDING OR SITE, SHALL USE RAISED LETTERS AND BE ACCOMPANIED BY GRADE 2 BRAILLE IN CONFORMANCE WITH CBC SECTION 11B-703.2

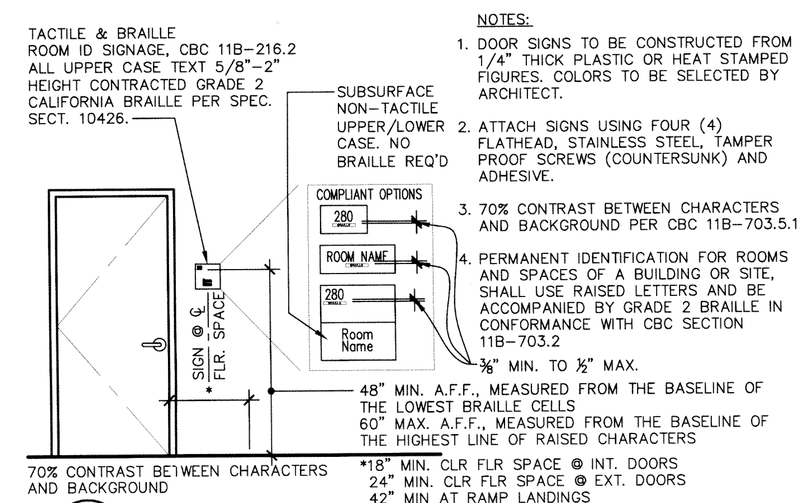

3 / A1.03 ROOM ID SIGNAGE

ADX100-01

SCALE: NO SCALE

NOTES:
1. DOOR SIGNS TO BE CONSTRUCTED FROM 1/4" THICK PLASTIC OR HEAT STAMPED FIGURES. COLORS TO BE SELECTED BY ARCHITECT.
2. ATTACH SIGNS USING FOUR (4) FLATHEAD, STAINLESS STEEL, TAMPER PROOF SCREWS (COUNTERSUNK) AND ADHESIVE.
3. 70% CONTRAST BETWEEN CHARACTERS AND BACKGROUND PER CBC 11B-703.5.1
4. ISA SYMBOL CAN ALSO BE PLACED ON DOOR. THE LOCATION IS NOT REGULATED.

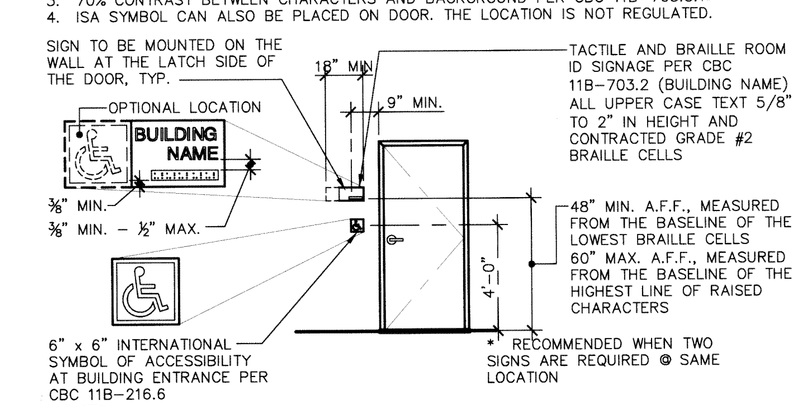

4 / A1.03 BUILDING ENTRANCE/I.S.A. SIGNAGE

ADA100-01

SCALE: 1/4" = 1'-0"

Ownership of Documents
This document, the ideas and designs incorporated herein, as an instrument of Professional Service is the property of Integrated Designs by SOMAM Inc. and is not to be used, in whole or in part for any other project without written authorization.
© COPYRIGHT 2015

integrated designs by SOMAM, Inc.
ARCHITECTURE · ENGINEERING · INTERIOR DESIGN · CONSTRUCTION MANAGEMENT
6011 N. Fresno, Suite 130 – Fresno, California 93710
Phone (559) 436-0881 Fax (559) 436-0887 E-Mail: design@somam.com
www.integrateddesigns.com

Revision:	Revision Description:	Rev. Date:	Revision:	Revision Description:	Rev. Date:

Sheet Title: SITE DETAILS

Project Name & Address:
FRANKLIN ELEMENTARY SCHOOL
ONE PORTABLE CLASSROOM
BAKERSFIELD CITY SCHOOL DISTRICT
2400 TRUXTUN BAKERSFIELD, CA

Issue Date: ISSUE DATE
Date: 07/15/16
Designer: --
DR: --
PC: PC INITIALS

Agency Approval Stamp:

IDENTIFICATION STAMP DIV. OF THE STATE ARCHITECT
APPROVED
AC FL SC
DATE 8-2-2016

Stamp(s):

LICENSED ARCHITECT CURTIS E. FLYNN No. C 28966 EXP. 5-31-17 STATE OF CALIFORNIA

Job No.: 5229

Sheet No.: A1.03

Release: -

G:\2016frs\16-5229 Franklin Elementary\Sheets\A1.03 SITE DETAILS.dwg RICHARD DELLANINI

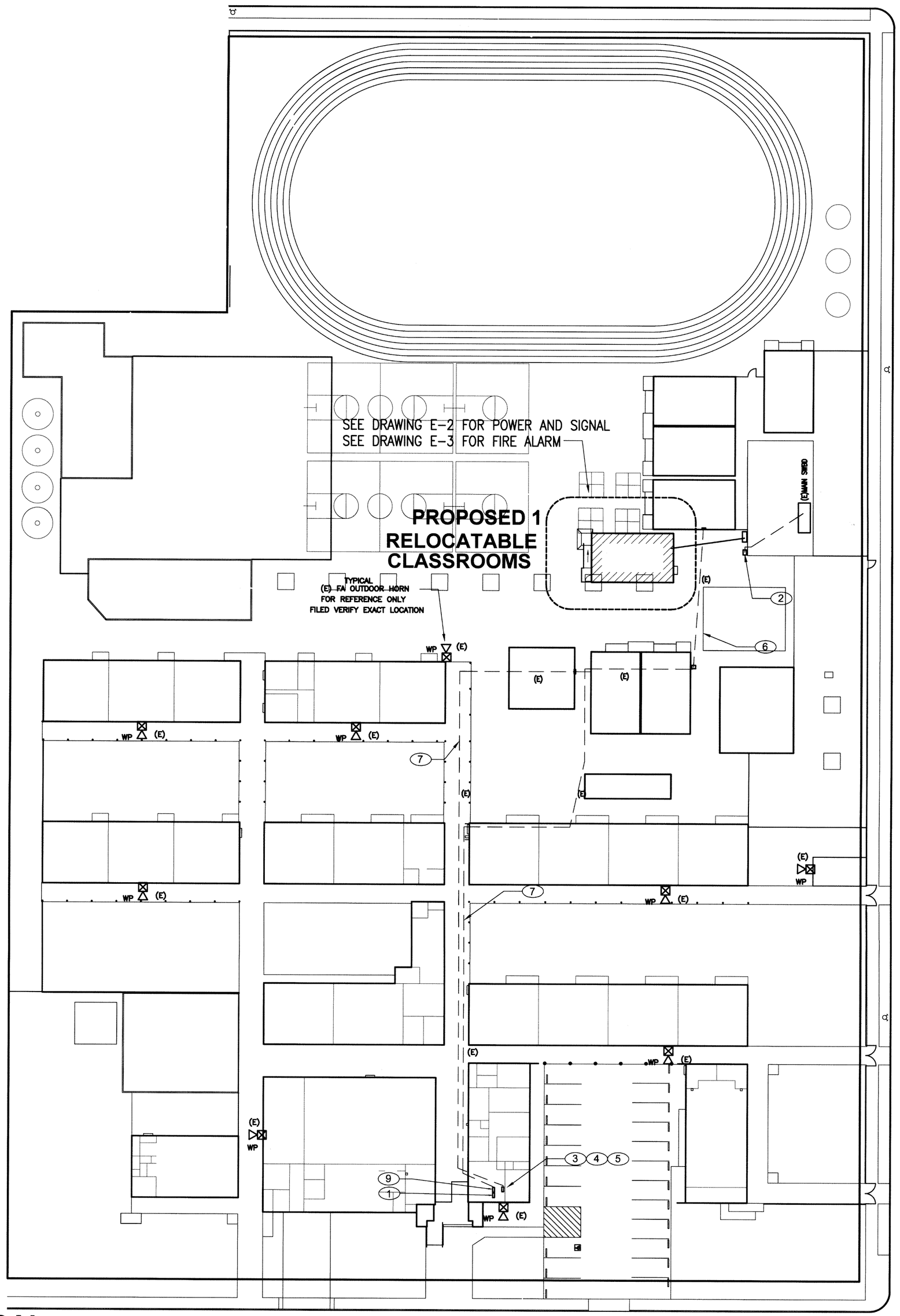

SITE PLAN - ELECTRICAL

SCALE : 1" = 30' – 0"

1" = 40'-0" (120, 80, 40, 0, 40)
1" = 30'-0" (90, 60, 30, 0, 30)
1" = 20'-0" (60, 40, 20, 0, 20)
1/8" = 1'-0" (24, 16, 8, 0, 8)
1/4" = 1'-0" (12, 8, 4, 0, 4)

SHEET NOTES

1. APPROXIMATE LOCATION FOR EXISTING ADDRESSABLE FIRE ALARM CONTROL PANEL AND EMERGENCY VOICE EVACUATION PANEL TO REMAIN IN SERVICE. PROVIDE CONNECTION TO NEW FIRE ALARM DEVICES PER PLANS, UPDATE NEW FIRE ZONE MAP AND PROGRAM NEW DEVICES INFORMATION, MEASURE ACTUAL LOAD CURRENT AND VOLTAGE DROP FOR EACH NAC SIGNAL CIRCUITS, AND FACP STANDBY CURRENT AND ALARM CURRENT. SEND THE REPORT TO OWNER AND ENGINEER FOR REVIEW, AND PLASTIC LAMINATED ONE COPY INSIDE FACP CABINET DOOR.
2. APPROXIMATE LOCATION FOR NEW PAD MOUNT TRANSFORMER AND DISTRIBUTION PANEL. PROVIDE NEW CONDUIT, FEEDERS AND POWER CONNECTION FOR NEW RELOCATABLE CLASSROOM BUILDINGS PER PLANS. SEE SINGLE LINE DIAGRAM.
3. APPROXIMATE LOCATION FOR EXISTING PA/IC/TELEPHONE EQUIPMENT IN ADMIN OFFICE. PROVIDE NEW CABLE AND CONNECTION FOR NEW SIGNAL DEVICES PER PLANS.
4. APPROXIMATE LOCATION FOR EXISTING COMPUTER MDF SERVER EQUIPMENT IN ADMIN OFFICE. PROVIDE NEW CABLE AND CONNECTION FOR NEW SIGNAL DEVICES PER PLANS.
5. APPROXIMATE LOCATION FOR EXISTING MASTER INTRUSION ALARM EQUIPMENT IN ADMIN OFFICE. PROVIDE NEW CABLE AND CONNECTION FOR NEW SIGNAL DEVICES PER PLANS.
6. (E) U.G SIGNAL CONDUITS, FIELD VERIFY LOCATION. PULL IN NEW SIGNAL CONDUCTORS PER PLANS. SEE DRAWING E-2 & E-3 FOR MORE INFORMATION.
7. (E) EMT SURFACE MOUNT SIGNAL CONDUITS, PULL IN NEW SIGNAL CONDUCTORS PER PLANS. SEE RISER DIAGRAMS.

— (E) — INDICATE EXISTING CONDUIT AND WIRING. FOR REFERENCE ONLY, FIELD VERIFY AS REQUIRED.

PROJECT NOTES

1. SOURCE OF POWER HAS BEEN INVESTIGATED AND IS ADEQUATE FOR THE ADDITIONAL LOAD.
2. SITE INSPECTOR IS TO WITNESS AND VERIFY GROUNDING TEST
3. CONTRACTOR TO MONITOR EXISTING FIRE ALARM SYSTEM IF IT IS INTERRUPTED OR DISCONNECTED.

MEP COMPONENT ANCHORAGE NOTES

ALL MECHANICAL, PLUMBING, AND ELECTRICAL COMPONENTS SHALL BE ANCHORED AND INSTALLED PER THE DETAILS ON THE DSA APPROVED CONSTRUCTION DOCUMENTS. WHERE NO DETAILS IS INDICATED, THE FOLLOWING COMPONENTS SHALL BE ANCHORED OR BRACED TO MEET THE FORCE AND DISPLACEMENT REQUIREMENTS PRESCRIBED IN THE 2013 CBC, SECTIONS 1616A.1.18 THROUGH 1616A. 1.28 AND ASCE 7-10 CHAPTER 13, 26 AND 30.

1. ALL PERMANENT EQUIPMENT AND COMPONENTS.
2. TEMPORARY OR MOVABLE EQUIPMENT THAT IS PERMANENTLY ATTACHED (E.G. HARD WIRED) TO THE BUILDING UTILITY SERVICES SUCH AS ELECTRICITY, GAS OR WATER.
3. MOVABLE EQUIPMENT WHICH IS STATIONED IN ONE PLACE FOR MORE THAN 8 HOURS AND HEAVIER THAN 400 POUNDS ARE REQUIRED TO BE ANCHORED WITH TEMPORARY ATTACHMENTS.

THE ATTACHMENT OF THE FOLLOWING MECHANICAL AND ELECTRICAL COMPONENTS SHALL BE FORMALLY ATTACHED TO THE STRUCTURE, BUT NEED NOT BE DETAILED ON THE PLANS. THESE COMPONENTS SHALL HAVE FLEXIBLE CONNECTIONS PROVIDED BETWEEN THE COMPONENT AND ASSOCIATED DUCTWORK, PIPING, AND CONDUIT.

A. COMPONENTS WEIGHING LESS THAN 400 POUNDS AND HAVE A CENTER OF MASS LOCATED 4 FEET OR LESS ABOVE THE ADJACENT FLOOR OR ROOF LEVEL THAT DIRECTLY SUPPORT THE COMPONENT.
B. COMPONENTS WEIGHTING LESS THAN 20 POUNDS, OR IN THE CASE OF DISTRIBUTED SYSTEMS, LESS THAN 5 POUNDS PER FOOT, WHICH ARE SUSPENDED FROM A ROOF OR FLOOR OR HUNG FROM A WALL.

FOR THOSE ELEMENTS THAT DO NOT REQUIRE DETAILS ON THE APPROVED DRAWINGS, THE INSTALLATION SHALL BE SUBMITT TO THE APPROVAL OF THE STRUCTURAL ENGINEER OF RECORD AND THE DSA DISTRICT STRUCTURAL ENGINEER. THE PROJECT INSPECTOR WILL VERIFY THAT ALL COMPONENTS AND EQUIPMENT HAVE BEEN ANCHORED IN ACCORDANCE WITH ABOVE REQUIREMENTS.

PIPING, DUCTWORK, AND ELECTRICAL DISTRIBUTION SYSTEM BRACING NOTE

PIPING DUCTWORK, AND ELECTRICAL DISTRIBUTION SYSTEMS SHALL BE BRACED TO COMPLY WITH THE FORCES AND DISPLACEMENTS PRESCRIBED IN ASCE 7-10 SECTION 13.3 AS DEFINED IN ASCE 7-10 SECTION 12.6.B, 13.6.5.6 AND 2013 CBC, SECTION 1616A.1.33, 1616A.1.34, 1616A.1.35 AND 1616A.1.28.

THE BRACING AND ATTACHMENTS TO THE STRUCTURE SHALL BE DETAILED ON THE APPROVED DRAWINGS OR THEY SHALL COMPY WITH ON OF THE OSHPD PRE-APPROVALS (OPA #) AS MODIFIED TO SATISFY ANCHORAGE REQUIREMENTS OF ACI 318, APPENDIX D.

COPIES OF THE MANUAL SHALL BE AVAILABLE ON THE JOBSITE PRIOR TO THE START OF HANGING AND BRACING OF THE PIPE , DUCTWORK, AND ELECTRICAL DISTRIBUTION SYSTEMS.

THE STRUCTURAL ENGINEER OF RECORD SHALL VERIFY THE ADEQUACY OF THE STRUCTURE TO SUPPORT THE HANGER AND BRACE LOADS.

CONSULTING ENGINEERS
JOHN CHONG ENGINEERING
2017 E. DECATUR AVE, FRESNO CA 93710
(559) 325-2286 • FAX 251-2410
jcengineer@aol.com

REGISTERED PROFESSIONAL ENGINEER
JOHN S. CHONG
E 14419
Exp.6/30/2018
ELECTRICAL
STATE OF CALIFORNIA

Ownership of Documents
This document, the ideas and designs incorporated herein, as an instrument of Professional Service is the property of Integrated Designs by SOMAM Inc. and is not to be used, in whole or in part for any other project without written authorization.
© COPYRIGHT 2013

integrated designs by SOMAM, Inc.
ARCHITECTURE · ENGINEERING · INTERIOR DESIGN · CONSTRUCTION MANAGEMENT
6011 N. Fresno, Suite 130 – Fresno, California 93710
Phone (559) 436-0881 Fax (559) 436-0887 E-Mail: design@somam.com
www.integratedesigns.com

Revision:	Revision Description:	Rev. Date:	Revision:	Revision Description:	Rev. Date:

Sheet Title: SITE PLAN - ELECTRICAL

Project Name & Address:
1 RELOCATABLE CLASSROOMS
FRANKLIN ELEMENARY SCHOOL
BAKERSFIELD CITY SCHOOL DISTRICT
2400 TRUXTUN AVE., BAKERSFIELD, CA

Issue Date:	Date:	Designer:	DR:	PC:
00/00/16	7/21/16	J CHONG	J CHONG	CJM

Agency Approval Stamp:
FILE #: 15-6
[redacted]
TRACKING #: DSA TRACKING NO

Stamp(s):
IDENTIFICATION STAMP DIV OF THE STATE ARCHITECT
03 117360
AC
DATE 8-2-2016
LICENSED ARCHITECT CURTIS E. LYNN No. C 28966 REN. 5-31-17 STATE OF CALIFORNIA

Job No.: 5229

Sheet No.: E-1

Release:

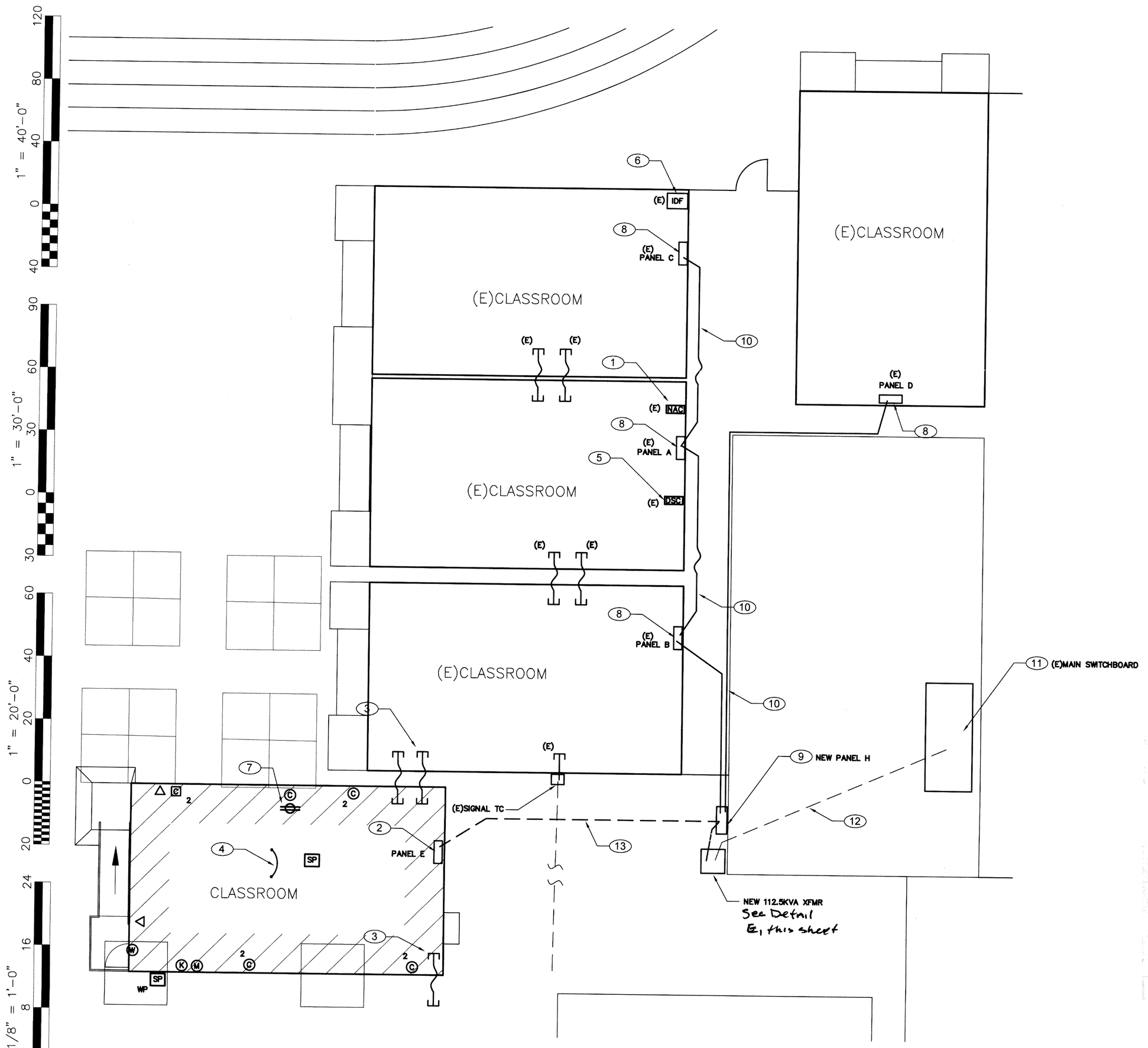

POWER AND SIGNAL PLAN

SCALE : 1/8" = 1' – 0"

FIRE ALARM SEQUENCE OF OPERATIONS

	ACTIVATE ALARM FACP	ACTIVATE TROUBLE SIGNAL AT REMOTE ANNUNCIATOR	ACTIVATE TROUBLE SIGNAL AT FACP	ACTIVATE TROUBLE SIGNAL AT REMOTE ANNUNCIATOR	ACTIVATE SUPERVISORY SIGNAL AT FACP	SEND SUPERVISORY SIGNAL AT REMOTE ANNUNCIATOR	SEND ALL OFF-SITE MA COMMUNICATOR	SEND SUPERVISORY SIGNAL OFF-SITE MA COMMUNICATOR	SEND SUPERVISORY SIGNAL OFF-SITE MA COMMUNICATOR	ACTIVATE AUDIBLE/VISIBLE SIGNALS	ACTIVATE WATER FLOW BELL	ACTIVATE FLOOR RELEASE	SECONDARY FLOOR RECALL	ELEVATOR SHUNT TRIP	SHUTDOWN HVAC UNITS	CLOSE FIRE DOORS	CLOSE FIRE DAMPERS	RESET 120VAC MITATING DEVICES	ACTIVATE BATTERY BACK-UP	DEACTIVATE AUDIBLE SIGNALS	DEACTIVATE VISUAL SIGNALS	RESET FAP & WIRE DEVICES	SYSTEM NORMAL
MANUAL PULL STATION	X	X					X			X							X						
SMOKE DETECTORS:																							
ALL (EXCEPT LISTED BELOW)	X	X					X			X							X						
PRIMARY FLOOR LOBBY	X	X					X			X			X				X						
ALL OTHER LOBBIES	X	X					X			X		X					X						
ELEVATOR MACHINE ROOM	X	X					X			X			X				X						
ELEVATOR SHAFT	X						X			X		X					X						
HEAT DETECTORS:																							
ALL (EXCEPT LISTED BELOW)	X	X					X			X							X						
ELEVATOR MACHINE ROOM	X	X					X			X				X			X						
ELEVATOR SHAFT	X	X					X			X				X			X						
DUCT DETECTOR					X	X			X							X	X						
FIRE SPRINKLER WATERFLOW SWITCH	X	X					X			X	X							X					
FIRE SPRINKLER TAMPER SWITCH					X	X			X														
POST INDICATOR VALVE					X	X			X														
WIRING CONDITIONS:																							
SIGNALING LINE CIRCUIT (SLC)–																							
WIRE-TO-WIRE SHORT			X	X				X															
SINGLE OPEN			X	X				X															
SINGLE GROUND			X	X				X															
INITIATING DEVICE CIRCUIT (IDC)–																							
WIRE-TO-WIRE SHORT	X	X					X			X							X						
SINGLE OPEN			X	X				X															
SINGLE GROUND			X	X				X															
NOTIFICATION APPLIANCE CIRCUIT (NAC)–																							
WIRE-TO-WIRE SHORT			X	X																			
SINGLE OPEN			X	X																			
SINGLE GROUND			X	X																			
LOSS OF 120VAC POWER			X	X				X										X					
SIGNAL SILENCE																			X	X			
RESET FACP																	X		X	X	X	X	

NOTE: SOME SEQUENCE OF OPERATIONS SHOWN MAY NOT APPLY

NOTES:

1. FOR OUTDOOR TRANSFORMER MOUNTING, CONCRETE PAD SHALL BE 6" WIDER THAN TRANSFORMER HOUSING. TOP OF SLABE SHALL BE 2" ABOVE ADJACENT GRADE.

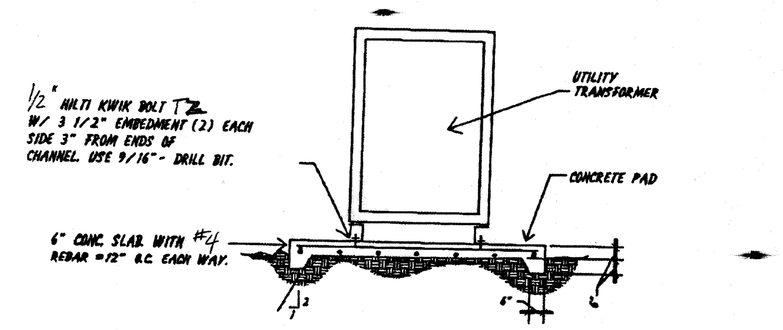

TRANSFORMER ANCHOR DETAIL

450–01

SCALE: NTS

FOR REFERENCE ONLY. SEE PORTABLE BUILDING ELECTRICAL PLANS FOR MORE INFORMATION.

(E)PANEL A — 120/240V 1ø 3W — 100 AMP MAIN BREAKER — REAR — 10,000 AIC — FLUSH — NEMA 1

CKT	SERVING	NOTE	GND	AVG	AMP POLE	TOTAL LOAD KVA øA	TOTAL LOAD KVA øB	AMP POLE	AVG	GND	NOTE	SERVING	CKT
1	RECEPTACLE		12	12	20/1	0.7	7.1	60/2	8	10		HVAC 3.5 TON	2
3	RECEPTACLE		12	12	20/1		0.7	7.1					4
5	SPACE		12	12	20/1			20/1	12	12		SPACE	6
7	SPACE		12	12	20/1			20/1	12	12		SPACE	8
9	INT/EXT LIGHTS		12	12	20/1	0.9		20/1	12	12		SPACE	10
11	INT LIGHTS		12	12	20/1		0.8	0.1	20/1	12	12	2 FIRE ALARM NAC PANEL	12
						8.7KVA	8.7KVA						
						72A	72A						

NOTES:
1. PROVIDE CIRCUIT DIRECTORY INSIDE PANEL
2. PROVIDE NEW MATCHING BREAKER AND MECHANICAL LOCK ON BREAKER PER NFPA 72, 10.6.5.2: DEDICATED CIRCUIT, MECHANICALLY PROTECTED (LOCKOUT), RED MARKING, ACCESSIBLE ONLY TO AUTHORIZED PERSONNEL ID'D AS FIRE ALARM, EMERGENCY COMMUNICATIONS OR FIRE ALARM/ECS. LOCATION OF CIRCUIT DISCONNECT (BREAKER) PERMANENTLY IDENTIFIED AT THE FIRE ALARM CONTROL UNIT.

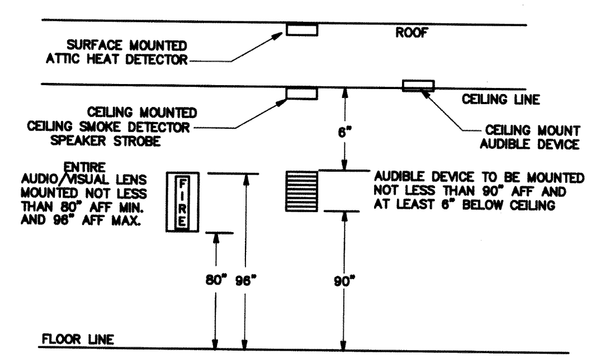

1 TYPICAL FIRE ALARM DEVICES MT'D DETAIL

N.T.S.

SHEET NOTES

1. EXISTING FIRE ALARM SIGNAL AND AUDIO BOOSTER PANEL WITH (E) 110V POWER CONNECTION AND DEDICATED CIRCUIT FROM PANEL A–12. SEE DRAWING E–3 FOR MORE INFORMATION.
2. PROVIDE POWER CONNECTION FOR RELOCATABLE BUILDING PRE–WIRED PANEL. SEE SINGLE LINE DIAGRAM ON DRAWING E–4.
3. PROVIDE 2"C EMT BETWEEN BUILDINGS AND STUB INTO BUILDING CEILING CAVITY FOR SIGNAL WIRING RACEWAY. CORE DRILL AND SEAL EXTERIOR WALL AS REQUIRED. PULL BACK PA/IC/TELE CABLE TO ADMIN OFFICE MASTER EQUIPMENT FOR NEW DEVICES CONNECTION. SEE RISER DIAGRAMS.
4. PROVIDE #6 COPPER GROUNDING CONDUCTOR AND BOND TO EACH SECTION STRUCTURAL STEEL BEAM. FIELD VERIFY EXACT LOCATION WITH GENERAL CONTRACTOR PRIOR TO INSTALLATION.
5. APPROXIMATE LOCATION FOR EXISTING SECURITY ALARM PANEL AND SYSTEM. PROVIDE CONNECTION FOR NEW SECURITY ALARM DEVICES PER PLANS. SEE RISER DIAGRAM.
6. EXISTING IDF AND CABINET SURFACE MOUNTED BELOW CEILING. PROVIDE CAT. 6 DATA CABLE FOR NEW DATA / IP PHONE OUTLET PER PLANS. FIELD VERIFY EXACT LOCATION AND REQUIREMENT WITH OWNER PRIOR TO INSTALLATION. SEE RISER DIAGRAM.
7. DATA AND POWER OUTLET AT CEILING FOR SMART BOARD. FIELD VERIFY EXACT LOCATION AND REQUIREMENT WITH OWNER PRIOR TO INSTALLATION. SEE RISER DIAGRAM.
8. RECONNECT EXISTING POWER PANEL TO NEW DISTRIBUTION PANEL H. SEE SINGLE LINE DIAGRAM.
9. NEW PANEL H, PROVIDE NEW CONDUITS AND FEEDERS FOR NEW PRE–WIRED PANEL POWER CONNECTION. SEE SINGLE LINE DIAGRAM.
10. EXISTING CONDUIT AND FEEDER ON EXTERIOR WALL TO REMAIN AND REUSE.
11. EXISTING MAIN SWITCHBOARD. PROVIDE NEW MATCHING BREAKER FOR NEW XFMR AND PANEL H POWER CONNECTION.
12. REPLACE EXISTING FEEDERS WITH NEW CONDUCTORS IN EXISTING UNDERGROUND CONDUIT. SEE SINGLE LINE DIAGRAM.
13. SAW CUT AND PATCH EXISTING FLOOR TO INSTALL NEW U.G CONDUIT AND FEEDER FOR NEW PANEL E POWER CONNECTION. SEE SINGLE LINE DIAGRAM.

SIGNAL AND COMM. LEGEND

SECURITY ALARM SYSTEM

- DSC — DIGITAL SECURITY ALARM CONTROL PANEL. MODEL SCMTROL (64ZONE). INTERFACE WITH EXISTING BUILDING MASTER SECURITY ALARM PANEL AS REQUIRED.
- (K) — LCD KEYPAD – MATCH EXISTING EQUIPMENT AS REQUIRED.
- (M) — DUAL TECHNOLOGY CEILING MOUNT DETECTOR. MATCH EXISTING EQUIPMENT AS REQUIRED.
- (B) — EXTERIOR BELL (SIREN) – DSC#SD15W WITH WEATHERPROOF BACKBOX AND TAMPER SWITCH.
- (W) — DOOR CONTACT SWITCH. RECESS ABOVE DOOR JAMB AT OPEN SIDE.
- —B — INDOOR SECURITY ALARM CABLE. WEST PENN #241
- —B1 — OUTDOOR SECURITY ALARM CABLE. WEST PENN #AQC224

COMMUNICATION (TELEPHONE/INTERCOM) SYSTEM

- ▽ — HANDSET/IP PHONE – FIELD VERIFY MODEL NO. AND MATCH EXISTING MASTER EQUIPMENT AS REQUIRED.
- SP — CEILING SPEAKER – RAULAND #US0221 W/ACC1000 BAFFLE. PROVIDE BACKBOX AND CEILING SUPPORT AS REQUIRED
- SP WP — OUTDOOR SPEAKER – ATLAS #APF15 HORN W/XFMR AND LOWELL (#C884 FOR SURFACE, #P875X FOR RECESS) BACK BOX W/SQLK GRILL
- —T — OUTDOOR TELE/AC CABLE. 22AWG SOILD COPPER 12 PAIR SHIELDED AND 12 PAIR UNSHIELDED CABLE.
- —T1 — INDOOR TELEPHONE CABLE. CAT.3 22AWG SOILD COPPER 4UTP SHIELDED CABLE.
- —P1 — OUTDOOR PA/IC CABLE – WEST PENN #AQC–369

DATA COMMUNICATION SYSTEM

- C 2 — DATA OUTLET – LEVITON CAT 5E (DUAL RECEPTACLE RED IN COLOR FOR ADMINISTRATIVE)
- (C) 2 — DATA OUTLET – LEVITON CAT 5E (DUAL RECEPTACLE BLUE IN COLOR FOR INSTRUCTIONAL)
- —FO — FIBER OPTIC CABLE VIA INNER DUCT WITH J–HOOK IN ATTIC AND 2"C FOR OUTDOOR. SEE RISER DIAGRAM FOR MODEL NO.
- —C1 — (ONE) CAT 5E 22AWG 4UTP. SEE RISER DIAGRAM FOR MODEL NO.
- —C2 — (TWO) CAT 5E 22AWG 4UTP. SEE RISER DIAGRAM FOR MODEL NO.

NOTES:

1. ALL SIGNAL CONDUCTORS CANNOT SPLICE INSIDE PULL BOX. CONDUCTOR MUST BE CONTINUE RUN BETWEEN SIGNAL DEVICES BACK BOX OR ABOVE GROUND TERMINAL CABINET.

CONSULTING ENGINEERS
JOHN CHONG ENGINEERING
2027 E. DECATUR AVE, FRESNO CA 93710
(559) 325-2280 • FAX 257-3401
jcengineer@aol.com

REGISTERED PROFESSIONAL ENGINEER — JOHN S. CHONG — E 14419 — Exp.6/30/2018 — ELECTRICAL — STATE OF CALIFORNIA

Ownership of Documents
This document, the ideas and designs incorporated herein, as an instrument of Professional Service is the property of Integrated Designs by SOMAM Inc. and is not to be used, in whole or in part for any other project without written authorization.
© COPYRIGHT 2013

integrated designs by SOMAM, Inc.
ARCHITECTURE · ENGINEERING · INTERIOR DESIGN · CONSTRUCTION MANAGEMENT
6011 N. Fresno, Suite 130 Fresno, California 93710
Phone (559) 435–0687 Fax (559) 435–0687 E-Mail: design@somam.com
www.IntegratedDesigns.com

Revision:	Revision Description:	Rev. Date:

Sheet Title: POWER AND SIGNAL PLAN

Project Name & Address: 1 RELOCATABLE CLASSROOMS FRANKLIN ELEMENARY SCHOOL
BAKERSFIELD CITY SCHOOL DISTRICT
2400 TRUXTUN AVE., BAKERSFIELD, CA

Issue Date: 00/00/16 | Date: 7/21/16 | Designer: J CHONG | DR: J CHONG | PC: CJM

Agency Approval Stamp:

FILE #: 15–6
IDENTIFICATION STAMP
DIV. OF THE STATE ARCHITECT
OFFICE OF REGULATION SERVICES
03-117330
AC CLS CSS
DATE 8-2-2016
TRACKING #: DSA TRACKING NO

Stamp(s):

LICENSED ARCHITECT — CURTIS E. FLYNN — No. C 28966 — REN. 5-31-17 — STATE OF CALIFORNIA

Job No.: 5229

Sheet No.: E-2

Release:

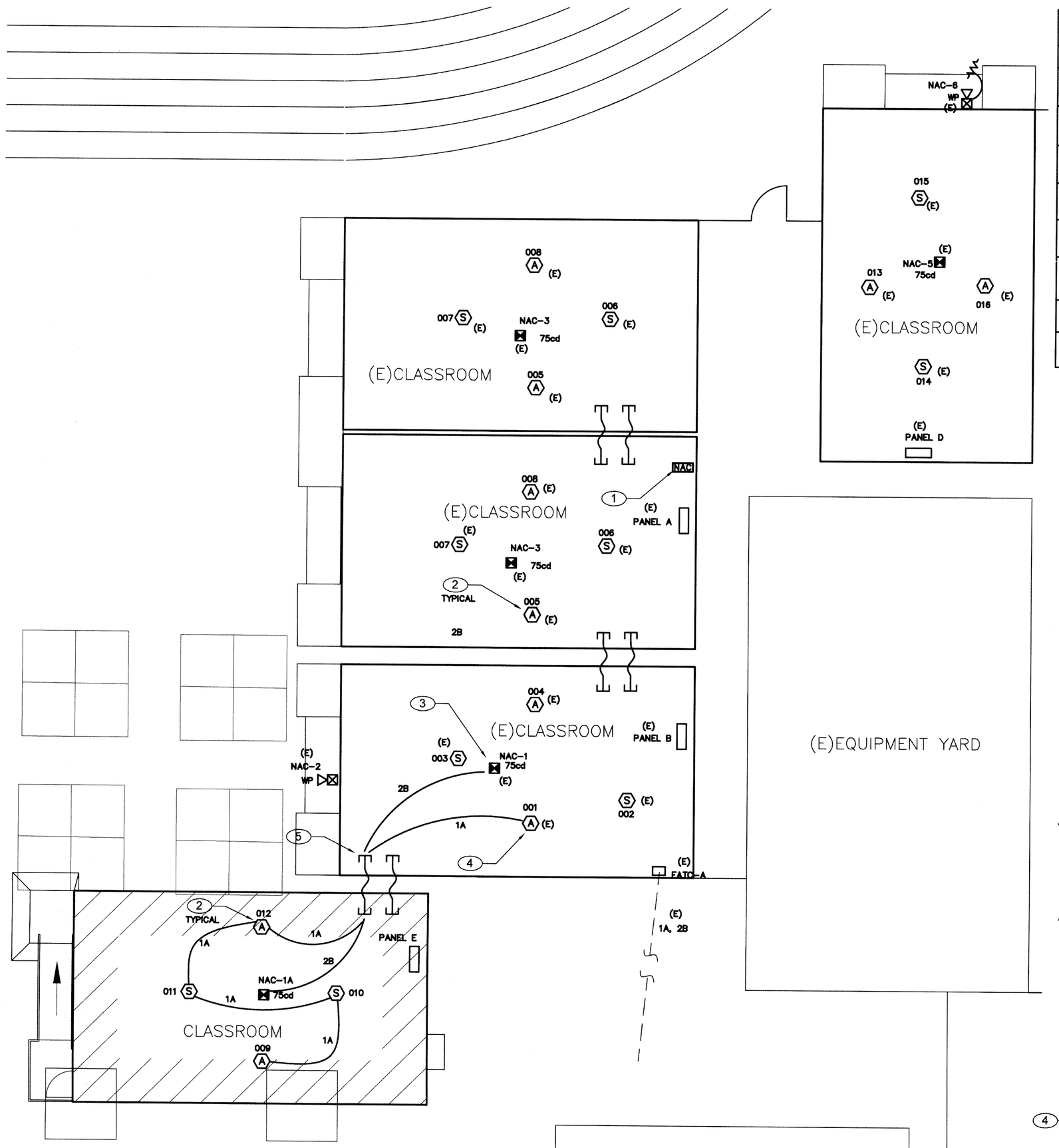

FIRE ALARM PLAN

SCALE : 1/8" = 1' – 0"

FIRE ALARM SYMBOLS AND SCHEDULE

ITEM	DESCRIPTION	MODEL NUMBER	CSFM NUMBER	MOUNT	BACK BOX
	EXISTING FACP (FOR REFERENCE ONLY)	HOCHIKI #FIRENET 4127	7165–0410:0159	+60"	EQUIPMENT CABINET
	EXISTING VOICE EVACUATION PANEL (FOR REFERENCE ONLY)	HOCHIKI EVAX 50	6911–0410:0176	+60"	EQUIPMENT CABINET
	EXISTING NAC SIGNAL & VOICE VAC BOOSTER PANEL (FOR REFERENCE ONLY)	WHEELOCK #SPB 80/4	6911–0785:0157	+60"	EQUIPMENT CABINET
	CEILING MOUNTED SPEAKER STROBE 15cd 30cd 75cd 110cd	HOCHIKI #HSSPKCLP	7320–0410:0194	+80"	4"SQ X 2 1/2"D
S	ADDRESSABLE CEILING SMOKE DETECTOR WITH BASE	HOCHIKI #ALK–V /YBN–NSA–4	7272–0410:0173 7300–0410:0132	CEILING	4"SQ X 2 1/2"D
A	ATTIC HEAT DETECTOR 190°F TEMP WITH BASE AND MONITOR MODULE	HOCHIKI #DFE 190°/HSC–XXOL #FRCME–4	7270–0410:0119 7300–0410:0150	ATTIC	4"SQ X 2 1/2"D
	FIRE ALARM CABLE POWER LIMITED	WEST PENN AQ SERIES	7161–0859:0101		
	END OF LINE RESISTOR	N/A	N/A	LAST DEVICE	4"SQ X 2 1/2"D

BATTERY POWER CALCULATIONS
EXISTING AUDIO AMPLIFIER

DEVICE	NO. OF DEVICE	CURRENT PER DEVICE STANDBY	CURRENT PER DEVICE LED	STANDBY CURRENT	LED CURRENT
UNIT	1	0.130A	1.0A	0.130A	1.0A
SUB-TOTAL				0.130A	1.0A

24 HOUR STANDBY CURRENT	3.120AH
15 MINUTE ALARM CURRENT (0.25 HR)	0.250AH
SUBTOTAL	3.370AH
20% SAFETY FACTOR	0.674AH
TOTAL NEW AMPS–HRS REQUIRED	4.044AH

REPLACE BATTERY WITH (2)12AH BATTERIES

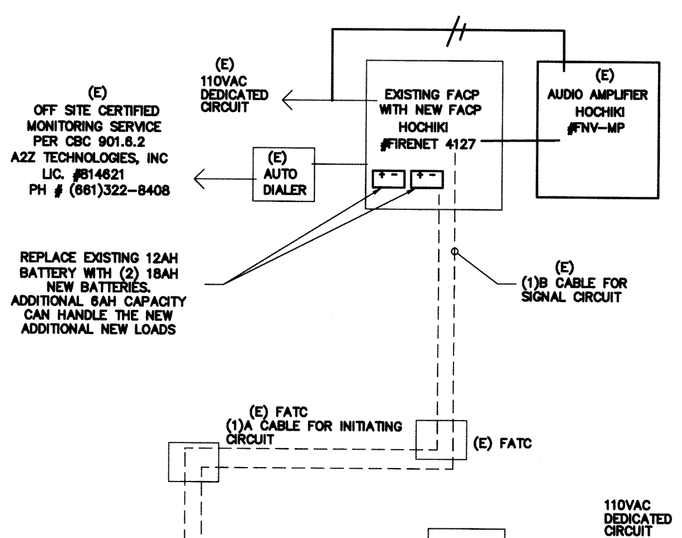

NOTES:

1. RISER DIAGRAM IS DIAGRAMMATIC. SEE FIRE ALARM FLOOR PLAN AND FIELD VERIFY EXACT ROUTING AS REQUIRED.
2. ALL INTERIOR FIRE ALARM CONDUCTORS ARE INSTALLED IN EMT CONDUIT AND CONCEAL ABOVE CEILING OR INSIDE WALL WITH 3/4"C.
3. FIRE ALARM CONDUCTOR CANNOT SPLICE INSIDE PULL BOX. CONDUCTOR MUST BE CONTINUE RUN BETWEEN FIRE ALARM DEVICES BACK BOX OR TERMINAL CABINET.

1 FIRE ALARM RISER DIAGRAM

N.T.S

BATTERY POWER CALCULATIONS
EXISTING NAC SIGNAL & AUDIO BOOSTER PANEL

DEVICE	NO. OF DEVICE	CURRENT PER DEVICE STANDBY	CURRENT PER DEVICE ALARM	STANDBY CURRENT	ALARM CURRENT
EXISTING UNIT	1	0.120A	10.23A	0.120A	10.23A
OUTDOOR SPEAKER	0	---	0.042A	---	0.000A
MINI HORN	0	---	0.025A	---	0.000A
VISUAL 15cd	0	---	0.041A	---	0.000A
SPEAKER/STROBE 15cd	0	---	0.072A	---	0.000A
SPEAKER/STROBE 30cd	0	---	0.088A	---	0.000A
SPEAKER/STROBE 75cd	1	---	0.178A	---	0.178A
SPEAKER/STROBE 110cd	0	---	0.244A	---	0.000A
SPEAKER	1	---	0.042A	---	0.042A
SYNC MODULES	0	---	0.045A	---	0.000A
SUB-TOTAL				0.120A	10.448A

24 HOUR STANDBY CURRENT	2.880AH
15 MINUTE ALARM CURRENT (0.25 HR)	2.612AH
SUBTOTAL	5.492AH
20% SAFETY FACTOR	1.098AH
TOTAL AMPS–HRS REQUIRED	6.590AH

REPLACE (E) BATTERY WITH (2) NEW 12AH BATTERY

DURING THE FINAL TESTING, MEASURE EXACT STANDBY AND ALARM CURRENT, VOLTAGE DROP FOR EACH SIGNAL CIRCUITS. SEND OWNER AND ENGINEER ONE COPY RECORD FOR REVIEW, AND PLASTIC LAMINATED ONE COPY INSIDE CABINET DOOR.

BATTERY POWER CALCULATIONS
EXISTING FACP

DEVICE	NO. OF DEVICE	CURRENT PER DEVICE STANDBY	CURRENT PER DEVICE LED	STANDBY CURRENT	LED CURRENT
EXISTING	1	0.3072A	3.656A	0.3072A	3.656A
SMOKE DETECTOR	2	0.0003A	0.0065A	0.0006A	0.0195A
HEAT DETECTOR	2	0.0003A	0.0065A	0.0006A	0.0195A
SUB-TOTAL				0.3084A	3.695A

24 HOUR STANDBY CURRENT	7.402AH
15 MINUTE ALARM CURRENT (0.25 HR)	0.924AH
SUBTOTAL	8.326AH
20% SAFETY FACTOR	1.665AH
TOTAL NEW AMPS–HRS REQUIRED	9.991AH

REPLACE EXISTING BATTERY WITH (2)18AH BATTERIES

VOLTAGE DROP CALCULATION
WORST CASE VOLTAGE DROP AT THE LAST DEVICE

VD = VOLTAGE DROP
I = TOTAL LOAD
K = 21.6
L = DISTANCE TO THE LOAD
CM = CIRCULAR MILLS (CROOS SECTION OF 12 AWG = 6530)
V = VOLTAGE (24vdc)
$VD = \frac{K * I * 2L}{CM}$

SIGNAL CKT NO.	AMPERES	APPROX LENGTH	RESISTIVITY OHM	WIRE AWG	AREA CM	VOLTS DROPPED	% VOLTS DROP
CKT. 1	1.0A	590'	21.6	12	6530	1.952V	8.1%

SIGNAL CIRCUIT LOAD SUMMARY

	OUTDOOR SPEAKER 0.042A	VISUAL 15cd 0.041A	SPEAKER/STROBE 15cd 0.072A	SPEAKER/STROBE 30cd 0.088A	SPEAKER/STROBE 75cd 0.178A	SPEAKER/STROBE 110cd 0.274A		SYNC MODULE 0.045A	TOTAL
CKT. #1	2	0	0	0	5	0		0	1.0A

FA CABLE SCHEDULE

TYPE	DESCRIPTION
A	INITIALING CIRCUIT CABLE 2#16 AWG SOLID COPPER PVC JACKET POWER LIMITED FPLR CABLE, FOR INDOOR VIA J–HOOK AND OUTDOOR VIA MIN. 3/4" CONDUIT INSTALLATION. WEST PENN #D990 OR EQUAL. CSFM# 7161–0859:0101
B	NAC SIGNAL CIRCUIT CABLE 2#12 AWG SOLID COPPER PVC JACKET POWER LIMITED FPLR CABLE, FOR INDOOR VIA J–HOOK AND OUTDOOR VIA MIN. 3/4" CONDUIT INSTALLATION. WEST PENN #AQ227 OR EQUAL. CSFM# 7161–0859:0101

COMPLETE AUTOMATIC FIRE ALARM PLAN SUBMITTAL

1. THE FIRE ALARM SYSTEM SHOWN ON THESE PLANS HAS BEEN SUBMITTED AND APPROVED BY DIVISION OF THE STATE ARCHITECT. ANY SUBSTITUTION OF THE FIRE ALARM SYSTEM SHALL BE RESUBMITTED TO THE ARCHITECT FOR REVIEW AND APPROVAL. THE CONTRACTOR SHALL PAY ANY ADDITIONAL FEES THAT ARE INCURRED DUE TO THIS SUBSTITUTION.
2. THE AUTOMATIC FIRE ALARM SYSTEM SHALL COVER ALL ROOMS AND AREAS AND UPON ACTIVATION OF AN INITIATING DEVICE ALERT ALL OCCUPANTS AND TRANSMIT THE ALARM, SUPERVISORY, AND TROUBLE SIGNALS TO AN APPROVED SUPERVISING STATION. (EXCEPTION: SMOKE DETECTORS ARE NOT REQUIRED IN NON–ACCESSIBLE AREAS AS DEFINED IN EMERGENCY EXPRESS TERMS OF PROPOSED S.F.M. AMENDMENTS TO 2013 C.F.C. SECTION 210 (C.F.C. SECTIONS 1006.2.4.2.2.1.1 AND 1006.2.4.2.2.1.5)

SHEET NOTES

1. EXISTING FIRE ALARM SIGNAL AND AUDIO BOOSTER PANEL AND CONNECT TO (E) FACP PER RISER DIAGRAM. EXISTING 110V POWER CONNECTION AND DEDICATED CIRCUIT FROM PANEL A–12. PROVIDE FIRE ZONE MAP, MEASURE ACTUAL LOAD CURRENT AND VOLTAGE DROP FOR EACH NAC SIGNAL CIRCUITS, AND STANDBY CURRENT AND ALARM CURRENT. BEIND THE REPORT TO OWNER AND ENGINEER FOR REVIEW, AND PLASTIC LAMINATED ONE COPY INSIDE CABINET DOOR. SEE FA RISER DIAGRAM FOR DETAIL.
2. LOCATE HEAT DETECTOR IN ATTIC AND SURFACE MOUNT ON THE BOTTOM OF RAFTER. DETECTOR COVERAGE WILL BE DERATED 50% ACROSS THE RAFTER. FIELD VERIFY LOCATION WITH GENERAL CONTRACTOR AND PROVIDE ATTIC HEAT DETECTOR IN EACH BAY OF STRUCTURAL.
3. INTERCEPT EXISTING NAC SIGNAL CIRCUIT AND EXPAND TO NEW FA SIGNAL DEVICE PER PLANS.
4. INTERCEPT EXISTING INITIATING CIRCUIT AND EXPAND TO NEW FA DETECTED DEVICE PER PLANS.
5. PROVIDE 1"C WP FLEX CONDUIT RACE BETWEEN BUILDING FOR NEW FA WIRING INSTALLATION. FIELD VERIFY LOCATION.

F.A SYSTEM SCOPE OF WORK

1. PROVIDE AUTOMATIC FIRE ALARM SYSTEM WITH VOICE EVACUATION SPEAKERS FOR THE NEW CLASSROOM BUILDINGS PER PLANS.
2. EXISTING FACP IS 24VDC ADDRESSABLE, AND CLASS B WIRING SYSTEM. AND WITH OFF SITE MONITORING SERVICE VIA AUTO DUAL LINE DIALER AND TELEPHONE LINES.
3. DURING THE FINAL TESTING, MEASURE ALL FIRE ALARM CURRENTS, VOLTAGE DROP FOR EACH SIGNAL CIRCUITS. SEND OWNER AND ENGINEER ONE COPY RECORD FOR REVIEW, AND PLASTIC LAMINATED ONE COPY INSIDE FACP CABINET DOOR.
4. COMPLETE FIRE ALARM DRAWING SUBMITTAL IS PROVIDED.

FIRE ALARM NOTES

1. THE SYSTEMS SHALL CONFORM TO CALIFORNIA ELECTRICAL CODES ARTICLE 760, CALIFORNIA FIRE CODE ARTICLE 10 AND CALIFORNIA BUILDING CODE, SECTION 305.9.
2. FIRE ALARM CIRCUITS SHALL BE RUN IN EMT CONDUIT PER SPECIFICATIONS.
3. UPON COMPLETION OF THE INSTALLATION OF THE FIRE ALARM SYSTEM, A SATISFACTORY TEST OF THE ENTIRE SYSTEM SHALL BE MADE IN THE PRESENCE OF THE ENFORCING AGENCY.
4. NO SPLICE SHALL BE PERMITTED IN PULLBOXES. ALL WIRE SHALL BE RUN CONTINUOUS BETWEEN TERMINAL CABINETS.
5. ALL PENETRATIONS IN FIRE–RATED ASSEMBLIES SHALL BE SEALED IN COMPLIANCE WITH CHAPTER 7, C.B.C.
6. AUDIBLE SIGNALS INTENDED FOR OPERATION IN THE PRIVATE MODE SHALL HAVE A SOUND LEVEL OF NOT LESS THAN 45 dBA AT 10 FT OR MORE THAN 130dBA AT THE MINIMUM HEARING DISTANCE FORM THE AUDIBLE APPLIANCE. AN AVERAGE SOUND LEVEL GREATER THAN 115 dBA REQUIRES THE USE OF A VISIBLE SIGNAL APPLIANCES. IF AUDIBILITY LEVEL DOES NOT MEET THE REQUIREMENT AT THE TIME OF TESTING, NEW AUDIBLES AND REVISED PLANS WILL BE REQUIRED.
7. NEW FIRE ALARM AUDIBLES SHALL BE TAMPO CODE 3.
8. A CERTIFICATE OF COMPLETION SHALL BE PROVIEDE TO THE OWNER PER NFPA 72 AND THE CALIFORNIA FIRE CODE.
9. AN APPROVED FIRE ALARM SYSTEM SHALL BE INSTALLED AS SET FORTH IN THE CALIFORNIA FIRE CODE IN GROUP, DIVISION 1, 2, AND 2.1 OCCUPANCIES. (303.9, CBC)
10. THE ALARM SYSTEM SHALL BE INSTALLED, TESTED, AND MAINTAINED IN ACCORDANCE WITH THE STATE FIRE MARSHAL'S REGULATIONS.
11. THE FIRE ALARM SYSTEM SHALL CONFORM TO CALIFORNIA ELECTRICAL CODE AND ARTICLE 91. INSTALLATION OF THE SYSTEM SHALL NOT BEGIN UNTIL DETAILED PLANS AND SPECIFICATIONS, INCLUDING SFM LISTING NUMBERS FOR EACH COMPONENT HAVE BEEN APPROVED BY DSA. UPON COMPLETION OF THE INSTALLATION. A TEST OF THE ENTIRE SYSTEM SHALL BE MADE IN THE PRESENCE OF THE INSPECTOR OF RECORD.
12. ALARM INDICATING DEVICES OF A FIRE ALARM SYSTEM INTENDED TO ALERT ALL OCCUPANTS SHALL CAUSE A LEVEL OF AUDIBILITY OF NOT LESS THAN 15 dBA ABOVE THE AVERAGE AMBIENT NOISE MEASURE @ 10' BUT/NOT LESS THAN 110dBA IN TOTAL THROUGHOUT. AMBIENT NOISE LEVELS MEANS THE LEVEL WHICH CAN NORMALLY BE EXPECTED WHEN THE FACILITY, BUILDING, ROOM OR AREA IS FUNCTIONING UNDER NORMAL OPERATING OR WORKING CONDITIONS.
13. THE ALARMS SYSTEM SHALL ACTIVATE A MEANS OF WARNING THE HEARING IMPAIRED. FLASHING VISUAL WARNINGS SHALL HAVE A FLASH RATE NOT EXCEDING TWO FLASHES PER SECOND (2 HZ) NOR BE LESS THAN ONE FLASH EVERY SECOND (1 HZ). STROBE SIGNALING DEVICES FOR THE HEARING IMPAIRED SHALL BE STATE FIRE MARSHAL APPROVED AND LISTED.

F.A. MONITORING NOTES

1. THE AUTOMATIC FIRE ALARM SYSTEMS SHALL TRANSMIT THE ALARM, SUPERVISORY AND TROUBLE SIGNALS TO AN APPROVED SUPERVISING STATION AS REQUIRED BY NFPA 72 AND AMENDED EITHER UUFX OR UUJS BY UNDERWRITERS OF FACTORY MUTUAL RESEARCH APPROVAL STANDARD 3011. SUPERVISION OF SYSTEM AND LEASED TELEPHONE LINES SHALL BY ARRANGED BY OWNER.

CONSULTING ENGINEERS
JOHN CHONG ENGINEERING
2027 E. DECATUR AVE, FRESNO CA 93710
(559) 915-2200 • FAX 237-9413
jcengineer@aol.com

REGISTERED PROFESSIONAL ENGINEER
JOHN S. CHONG
E 14419
Exp.6/30/2018
ELECTRICAL
STATE OF CALIFORNIA

Ownership of Documents
This document, the ideas and designs incorporated herein, as an instrument of Professional Service is the property of Integrated Designs by SOMAM Inc. and is not to be used, in whole or in part for any other project without written authorization.
© COPYRIGHT 2013

integrated designs by SOMAM, Inc.
ARCHITECTURE · ENGINEERING · INTERIOR DESIGN · CONSTRUCTION MANAGEMENT
8011 N. Fresno, Suite 130 – Fresno, California 93710
Phone (559) 435–0681 Fax (559) 435–0687
www.integratedsdesigns.com E–Mail: design@somam.com

Revision:	Revision Description:	Rev. Date:

Sheet Title: FIRE ALARM PLAN

Project Name & Address:
1 RELOCATABLE CLASSROOMS
FRANKLIN ELEMENARY SCHOOL
BAKERSFIELD CITY SCHOOL DISTRICT
2400 TRUXTUN AVE., BAKERSFIELD, CA

Issue Date: 00/00/16
Date: 7/21/16
Designer: J CHONG
DR: J CHONG
PC: CJM

Agency Approval Stamp:
FILE #: 15–6
IDENTIFICATION STAMP
DIV. OF THE STATE ARCHITECT
OFFICE OF REGULATION SERVICES
03-117350
AC___ FLS___ SS___
DATE 8-2-2016
TRACKING #: DSA TRACKING NO

Stamp(s):
LICENSED ARCHITECT CURTIS E. FLYNN No. C 28966 REN. 5-31-17 STATE OF CALIFORNIA

Job No.: 5229

Sheet No.: E-3

Release:

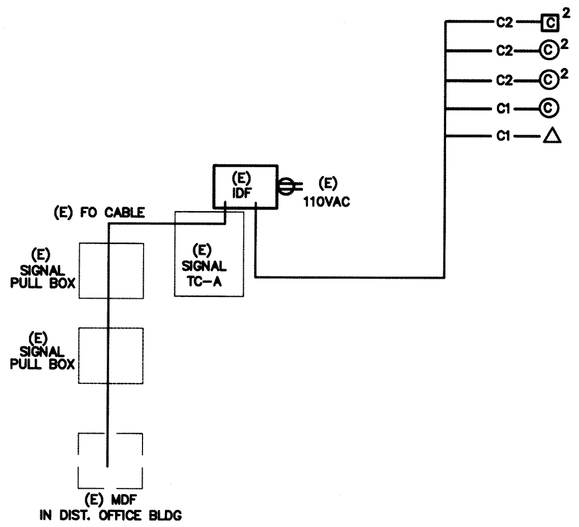

FIBER OPTIC CABLE
THREE MULTIMODE PAIRS (SIX STRANDS) AND THREE SINGLE-MODE PAIRS (SIX STRANDS)
OPTICAL CABLE COMPANY # DX 12/065D-6W3SB/1UC-6SYMC-YMD/900-OFNR OF EQUAL
CATSE CABLE
SENP4P24-BL-BER-PV OR EQUAL
CABLE TESTING
ALL FIBER OPTIC CABLE MUST BE TESTED TO SUPPORT 1000BASE-FX FULL DUPLEX STANDARDS.
ALL CAT 5E CABLE MUST BE TESTED TO SUPPORT 100BASE-TX.
TEST RESULTS ARE TO BE PROVIDED TO SCHOOL TECHNOLOGICAL SERVICES FOR REVIEW AND APPROVAL.
IDF SWITCH EQUIPMENT

F/O	CISCO WS-C2950G-24 W/ WS-C5484 GBIC
TP	CISCO WS-C2950-24
CABINETS	SOUTH WESTERN DATA PRODUCT SWE 4000-18UDBLK OR EQUAL
JACKS	ALLEN TEL AT55-16 OR EQUAL
FACEPLATE	ALLEN TEL AT30-2-09 OR EQUAL
PATCH PANEL	ALLEN TEL ATPNL-24 OR EQUAL

LABELING IDENTICATION
ALL INSTALLED EQUIPMENT, CABLES, TERMINATIONS, ETC. WILL BE PERMANENTLY AND UNIQUELY MARKED. CABLES WILL BE MARKED USING A CONVENTION THAT WILL IDENTIFY ITS ORIGIN AND DESTINATION. LAN TERMINATIONS WILL SIMILARLY BE MARKED TO UNIQUELY IDENTIFY THEM WHILE PROVIDING THE SOURCE AND DESTINATION OF CABLE. IDENTIFICATIONS MUST BE SUCH THAT THEY WILL NOT RUB OFF, FALL OFF, OR EASILY BREAK AWAY.
DATA COMMUNICATION SYSTEM NOTES
1. CONTRACTOR TO PROVIDE ALL EQUIPMENT, PATCH CABLE AND ACCESSORY FOR A FULLY FUNCTIONAL SYSTEM.
2. NEW DATA JACK WIRING CONFIGURATION MUST BE MATCHED EXISTING SYSTEM. FIELD VERIFY PRIOR TO INSTALLATION.
3. ADMINISTRATIVE NODE TO BE RED IN COLOR WITH THE INSTRUCTIONAL NODE TO BE BLUE IN COLOR. NODE LOCATION MUST BE 12" WITHIN POWER RECEPTACLE AND FIELD VERIFY EXACT LOCATION WITH OWNER PROJECT COORDINATOR OR TECHNOLOGICAL SERVICES PERSONNEL PRIOR TO INSTALLATION.
4. ALL EQUIPMENT DOCUMENTATION AND WARRANTY INFORMATION WILL BE PROVIDED TO OWNER TECHNOLOGICAL SERVICES. WARRANTY CARDS WILL BE PROVIDED TO VUSD TECHNOLOGICAL SERVICES FOR FILING WITH MANUFACTURERS UPON COMPLETION OF INSTALLATION.

7 DATA COMMUNICATION SYSTEM RISER DIAGRAM

N.T.S

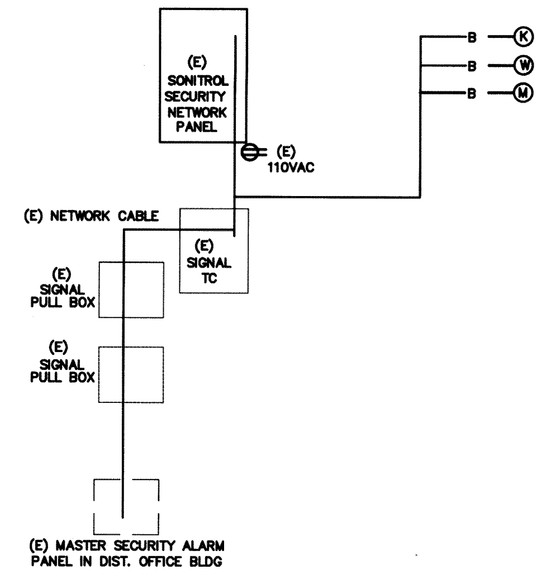

5 SECURITY ALARM SYSTEM RISER DIAGRAM

N.T.S

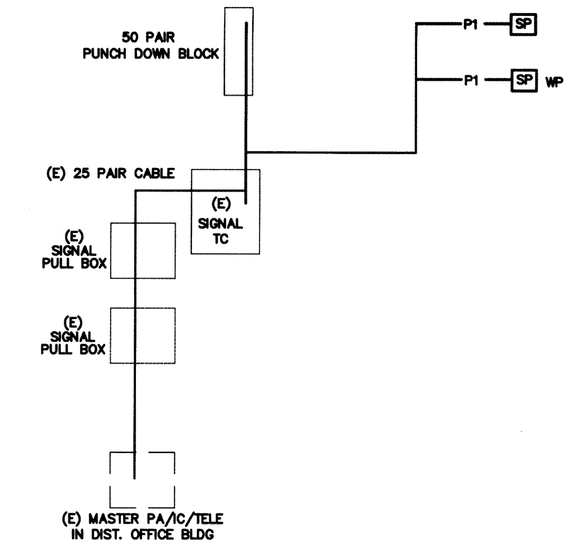

2 PA/IC/TELE SYSTEM RISER DIAGRAM

N.T.S

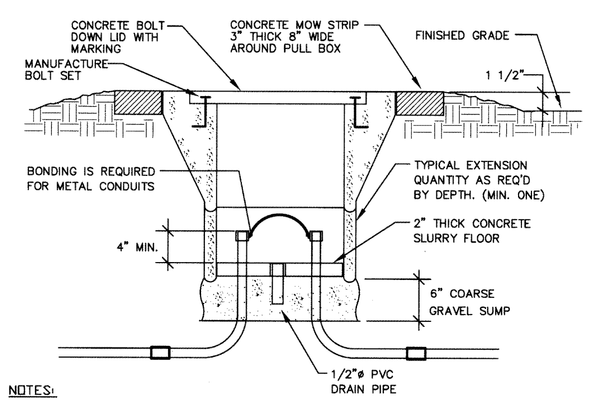

NOTES:
WHERE PULL BOX IS LOCATED WITH IN 30" OF A FOUNDATION OR SIDE WALK, PULL BOX SHALL BE SET FLUSH WITH THE ADJACENT SURFACE, MOW STRIP CONCRETE SHALL BE POURED FLUSH WITH FOUNDATION OR SIDE WALK.

4 PULL BOX AT OPEN YARD DETAIL

N.T.S

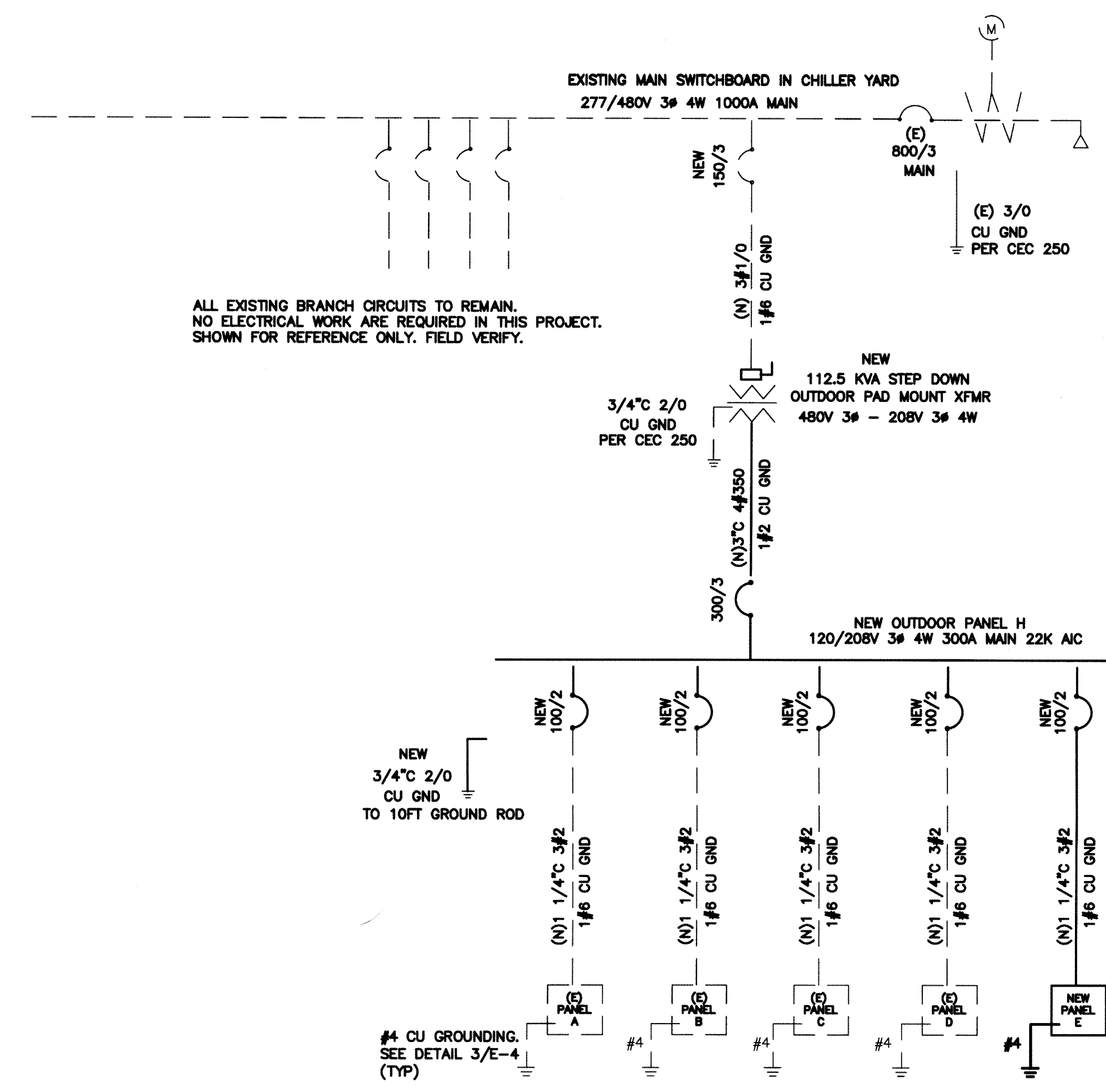

NOTES:
1. PROVIDE NEW MATCHING BREAKERS, FEEDERS AND PANELS PER PLANS.
2. ALL NEW CONDUCTOR SHALL BE 75°C THWN-2 COPPER IN CONDUIT. (AMPACITY FOR CONDUCTOR SELECTION MUST BE DETERMINED/DERATED BY THE ALLOWED TERMINATION RATINGS MARKED/APPROVED ON EACH DEVICES, MOTOR, APPLIANCE, XFMR O.C.P.C. PANEL, ETC. CONDUCTORS INSTALLED IN U.G OR WET LOCATIONS SHALL BE MARKER 'W'. PER 2013 CEC 110-14(C)(1).)
3. ALL WIRING OVER 100 VOLT SHALL BE INSTALLED IN RACEWAY CONDUIT, EMT ABOVE GRADE, PVC SCH. 40 BELOW GRAD AND STEEL CONDUIT ON EXPOSE SURFACE BELOW 8' AFF. FOR PHYSICAL PROTECTION.
4. STEEL BACK BOX SHALL BE PROVIDE FOR ALL NEW ELECTRICAL DEVICES SUCH AS SWITCH, OUTLET AND CONDUCTOR SPLICE.
5. ELECTRICAL CONTRACTOR IS RESPONSIBLE TO VERIFY THE EXISTING SWITCHBOARD AND PANELS ARE INSTALL PER ONE LINE DIAGRAM PRIOR TO WORKING, AND REPORT TO ENGINEERS IF ANY DISCREPANCY ARE FOUND.

1 SINGLE LINE DIAGRAM

N.T.S

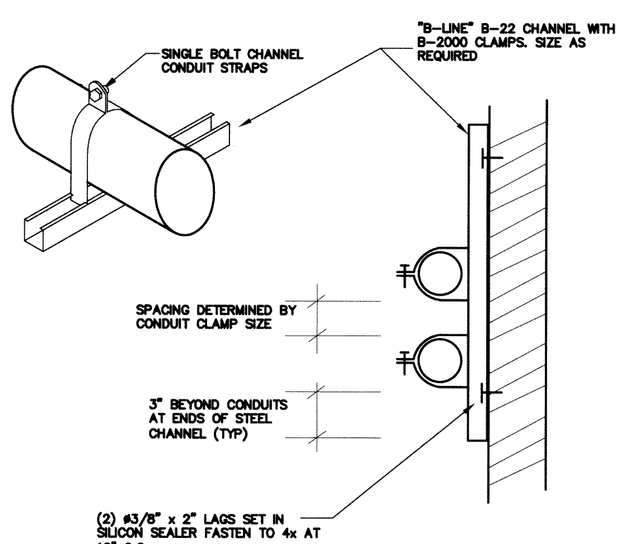

6 CONDUIT SUPPORT DETAIL

N.T.S

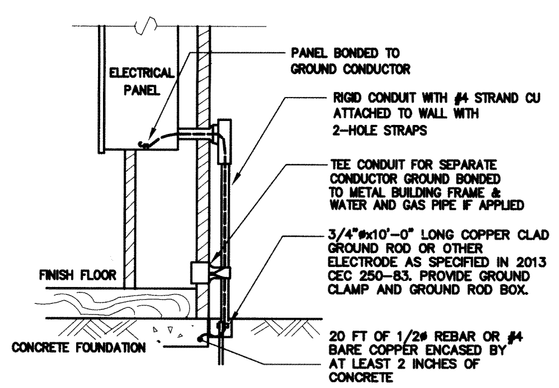

NOTES:
1. SIZE OF CONDUCTORS SHALL COMPLY WITH 2013 CEC TABLE 250-66.
2. BOND SEPARATE CONDUCTORS FROM GROUND ROD TO ELECTRICAL PANEL AND TO METAL BUILDING FRAME PER 2013 CEC 250-50. IN ADDITION TO THE DETAIL SHOWN ABOVE BOND THE ELECTRICAL GROUND TO METAL WATER PIPE EMBEDDED AT LEAST 10 FT. IN SOIL IF AVAILABLE (CEC 250-50, 250-82).
3. ALL MADE OF METAL FRAME BUILDINGS SHALL BE ELECTRICALLY BONDED TOGETHER, BOND TO HAND RAIL AND WATER PIPE IF APPLIED. (BOLTING ONLY IS NOT ACCEPTABLE BONDING).
4. CHECK RESISTANCE TO GROUND. IF RESISTANCE EXCEED 25 OHMS, INSTALL ADDITIONAL GROUND RODS WITH CONDUCTORS AS SHOWN SEPARATED AT LEAST 6'-0" UNTIL RESISTANCE IS REDUCED TO 25 OHMS OR LESS (2013 CEC 250-84).
5. FIELD INSPECTOR SHALL WITNESS GROUNDING TEST.

3 GROUNDING DETAIL

N.T.S

CONSULTING ENGINEERS
JOHN CHONG ENGINEERING
1027 E. DECATUR AVE. FRESNO CA 93710
(559) 215-9266 • FAX 237-3417
jcengineer@sci.com

REGISTERED PROFESSIONAL ENGINEER
JOHN S. CHONG
E 14419
Exp.6/30/2018
ELECTRICAL
STATE OF CALIFORNIA

Ownership of Documents
This document, the ideas and designs incorporated herein, as an instrument of Professional Service is the property of Integrated Designs by SOMAM Inc. and is not to be used, in whole or in part for any other project without written authorization.
© COPYRIGHT 2013

integrated designs by SOMAM, Inc.
ARCHITECTURE · ENGINEERING · INTERIOR DESIGN · CONSTRUCTION MANAGEMENT
6011 N. Fresno, Suite 130 – Fresno, California 93710
Phone (559) 435-0861 Fax (559) 435-0867 E-Mail: design@somam.com
www.integrateddesigns.com

Revision:	Revision Description:	Rev. Date:
Revision:	Revision Description:	Rev. Date:

Sheet Title: DETAILS AND SYSTEM DIAGRAMS

Project Name & Address:
1 RELOCATABLE CLASSROOMS
FRANKLIN ELEMENTARY SCHOOL
BAKERSFIELD CITY SCHOOL DISTRICT
2400 TRUXTUN AVE., BAKERSFIELD, CA

Issue Date:	Date:	Designer:	Dr:	PC:
00/00/16	7/21/16	J CHONG	J CHONG	C.M

Agency Approval Stamp:
FILE #: 15-6
IDENTIFICATION STAMP
DIV. OF THE STATE ARCHITECT
OFFICE OF REGULATION SERVICES
03-117350
AC ___ FLS ___ SS
DATE 8-2-2016
TRACKING #: DSA TRACKING NO

Stamp(s):

LICENSED ARCHITECT CURTIS E. FLAIN No. C 28966 REN. 5-31-17 STATE OF CALIFORNIA

Job No.: 5229

Sheet No.: E-4

Release:

JOB# 4736

MODULAR CLASSROOM BUILDING

FOR WILLIAMS SCOTSMAN

BUILDING SIZE: 24'x40'(50 UNITS)

STOCKPILE

CLASS LEASING INC
STOCKPILE 76- A# 04-105455 CERTIFIED 3/25/2005
SERIAL NUMBERS
47944-001/002
47945-001/002
47946-001/002
47947-001/002
47948-001/002
47949-001/002
47962-001/002
47963-001/002
47980-001/002
47981-001/002
48721-001/002
48722-001/002
48723-001/002
48724-001/002
48725-001/002
48726-001/002
48728-001/002
48733-001/002
48734-001/002

PC-04-104796

PC
CBC 2001

State of California • Department of General Services • Gray Davis, Governor
DIVISION OF THE STATE ARCHITECT
Headquarters: 1102 K Street, Suite 101 • Sacramento, CA 95814 • (916) 445-8100

STRUCTURAL TESTS AND INSPECTIONS

(Old 101419)

BUILDING DATA

STRUCTURAL DESIGN: ORDINARY MOMENT RESISTANT FRAME
TYPE OF CONSTRUCTION: V-N
WIND LOAD (EXP C): 80 MPH
SEISMIC ZONE 4, SEISMIC SOURCE TYPE A, DISTANCE <1.26 MILES
Z = .4 I = 1.0 Cv = 1.28 Nv = 2.0
R = 4.5 Ca = 0.56 Na = 1.5 SOIL TYPE = S_D
FLOOR LIVE LOAD: 50 PSF
ROOF LIVE LOAD: 20 PSF
OCCUPANCY: 24'x40' CLASSROOM: E-2
BUILDING AREA: 24'x40' BUILDING – 960 SF
-COMPLIES WITH CLIMATE ZONES 1-15
THIS PC IS DESIGNED STRUCTURALLY TO SUPPORT THE WEIGHT OF A FIRE SPRINKLER SYSTEM.

APPLICABLE CODES

2001 CALIFORNIA BUILDING CODE (CBC), VOLUMES 1, 2 AND 3 (PART 2, TITLE 24, CCR) (1997 EDITION UNIFORM BUILDING CODE WITH 2001 CALIFORNIA AMENDMENTS)
2001 CALIFORNIA ELECTRICAL CODE (CEC), (PART 3, TITLE 24, CCR) (1999 EDITION NATIONAL ELECTRICAL CODE WITH 2001 CALIFORNIA AMENDMENTS)
2001 CALIFORNIA MECHANICAL CODE (CMC), (PART 4, TITLE 24, CCR) (2000 EDITION UMC UNIFORM MECHANICAL CODE WITH 2001 CALIFORNIA AMENDMENTS)
2001 CALIFORNIA PLUMBING CODE (CPC), (PART 5, TITLE 24, CCR) (2000 EDITION UPC UNIFORM PLUMBING CODE WITH 2001 CALIFORNIA AMENDMENTS)
2001 CALIFORNIA FIRE CODE (PART 9, TITLE 24, CCR)
2001 CALIFORNIA ADMIN STANDARDS ADMINISTRATIVE CODE (PART 1, TITLE 24, CCR)
2001 CALIFORNIA ENERGY CODE (PART 6, TITLE 24, CCR)
2001 CALIFORNIA REFERENCED STANDARDS CODE (PART 12, TITLE 24, CCR)
TITLE 19, CCR, PUBLIC SAFETY, STATE FIRE MARSHALL REGULATIONS.

LEGEND

SYMBOL	DESCRIPTION
1/–	DETAIL (1) ON SAME SHEET AS SYMBOL
1/2	DETAIL (1) ON SHEET (2)
1	KEY NOTE (1) ON SAME SHEET AS SYMBOL
A/2	SECTION "A" ON SHEET (2)
1	REVISION/CHANGE IN DRAWING. (1) IS FIRST REVISION
CLOUD	HIGHLIGHTS CHANGED AREA
1	DOOR REFERENCE
A	WINDOW REFERENCE
EL	ELECTRICAL ITEM(S) SEE ELECTRICAL DRAWINGS
HV	HEATING/VENTILATING & AIR CONDITIONING ITEM(S) SEE MECHANICAL DRAWINGS
PLG	PLUMBING ITEM(S) SEE MECHANICAL DRAWINGS
STR	STRUCTURAL ITEM(S) SEE STRUCTURAL DRAWINGS
FIN	FINISH ITEM(S) SEE FINISH SCHEDULE
RAMP	RAMP – SEE RAMP DRAWINGS

ABBREVIATIONS

ABC = ABOVE BASE CONCRETE
BGC = BELOW GRADE CONCRETE
DIA = DIAMETER
CLR = CLEAR
GA = GAUGE
MAX = MAXIMUM
MIN = MINIMUM
NIC = NOT IN CONTRACT
NTS = NOT TO SCALE
OC = ON CENTER
OD = OUTSIDE DIAMETER
GYB = GYPSUM WALLBOARD
RBM = ROOF BEAM
SIM = SIMILAR
STS = SELF TAPPING SCREW
STSMS = SELF TAPPING SHEET METAL SCREW
TYP = TYPICAL
UON = UNLESS OTHERWISE NOTED

NOTES

SECTION 2213A.4.1 OF THE 2001 CBC
ALL WELDS IN PRIMARY MEMBERS AND CONNECTIONS IN THE LATERAL FORCE-RESISTING SYSTEM SHALL BE MADE WITH A FILLER METAL THAT HAS A MINIMUM CHARPY V-NOTCH TOUGHNESS OF 20 FT-LBS AT MINUS 20 DEGREES F.

WITH THE SUBMITTAL OF THESE DRAWINGS, WE ACKNOWLEDGE THAT WE HAVE REVIEWED THESE PLANS AND SPECIFICATIONS AND HAVE FOUND THEM TO BE IN GENERAL COMPLIANCE WITH THE BID DRAWINGS, SPECIFICATIONS AND ASSOCIATED ADDENDA. WHEN THESE PLANS AND SPECIFICATIONS HAVE BEEN APPROVED BY THE DIVISION OF THE STATE ARCHITECT, THEY SHALL PRECEDE OVER CONFLICTING AREAS IN THE BID DRAWINGS AND SPECIFICATIONS, AND ANY ADDENDA THERETO.

CONFIDENTIAL – THIS DOCUMENT AND THE INFORMATION CONTAINED HEREIN ARE THE PROPERTY OF MODTECH, INC. UNAUTHORIZED COPYING, DISCLOSURE OR OTHER UNAUTHORIZED USES ARE PROHIBITED.

SHEET INDEX

ARCHITECTURAL

A.0 TITLE SHEET
A1.0 FLOOR PLAN
A1.1 FLOOR PLAN
A2.01 REFLECTED CEILING PLAN (24 LIGHTS)
A2.02 REFLECTED CEILING PLAN (16 LIGHTS)
A2.03 REFLECTED CEILING PLAN (12 LIGHTS)
A2.04 REFLECTED CEILING PLAN (12 LIGHTS)
A2.05 REFLECTED CEILING DETAILS
A3.01 ROOF PLAN 22 GA.
A3.02 ROOF PLAN 26 GA.
A3.03 ROOF DETAILS
A4.01 EXTERIOR ELEVATIONS (DUAL PITCH) W/ FASCIA
A4.02 EXTERIOR ELEVATIONS (DUAL PITCH) W/O FASCIA
A4.03 ARCHITECTURAL DETAILS (WOOD STUDS)
A4.03M ARCHITECTURAL DETAILS (METAL STUDS)
A4.04M ARCHITECTURAL DETAILS (METAL STUDS)
A5.01 EXTERIOR ELEVATIONS
A5.02 EXTERIOR ELEVATIONS
A6.01 DOOR, WINDOW, FRAME, HARDWARE SCHEDULE
A6.02 DOOR, WINDOW, FRAME, HARDWARE SCHEDULE
A8.0 SPECIFICATIONS
A8.1 SPECIFICATIONS
A8.2 SPECIFICATIONS
F1.0 C.L. 24 X40 GENERAL FOUNDATION SPECS (PC 04-113776)
F2.1 C.L. 24 X40 FOUNDATION PLAN AND DETAILS (PC 04-113776)

IDENTIFICATION STAMP
DIV. OF THE STATE ARCHITECT
OFFICE OF REGULATION SERVICES
[redacted]
DATE JUL 12 2013

STRUCTURAL

F1.0 FOUNDATION PLAN 25 PSF LL
F2.01 FOUNDATION DETAILS (WOOD) W/ 3 PLATES
S1.0 FLOOR FRAMING PLAN 50 PSF LL
S1.2 FLOOR FRAMING DETAILS (WOOD)
R1.01 ROOF FRAMING PLAN (WOOD) W/ FASCIA
R1.02 ROOF FRAMING PLAN (WOOD) W/O FASCIA
R2.01 ROOF FRAMING DETAILS (WOOD)

IDENTIFICATION STAMP
DIV. OF THE STATE ARCHITECT
AC 1173510
DATE 8-3-2010

MECHANICAL

M1.0 MECHANICAL (HVAC) PLAN – 4 TON
M1.02 MECHANICAL (HVAC) PLAN – 5 TON

ELECTRICAL

E1.01 ELECTRICAL PLAN
E1.02 ELECTRICAL PLAN
E1.03 ELECTRICAL PLAN
E1.04 ELECTRICAL PLAN

RAMP

R1.02 RAMP/STAIRS DETAILS
R5.01 5 FOOT RAMP/HANDRAIL PLAN, 12' RAMP

REVISIONS

Electrical Engineer's Seal | Mechanical Engineer's Seal | PC Professional of Record Seal | Architects Seal

MODTECH
28[redacted] EMERETT AVENUE FAX (909) 943-4014
PERRIS, CALIF. 92572 FAX (909) 940-0427

PROJECT NUMBER: 4736
WILLIAM SCOTSMAN

© MODTECH, INC. 2002
ALL RIGHTS RESERVED

DRAWN BY: GL
DATE: 07/07/03
CHECKED BY:
DATE: STKP-76

COVER SHEET

A.0

PROJECT NO. 4736
PC-04-104796
FILE PATH:

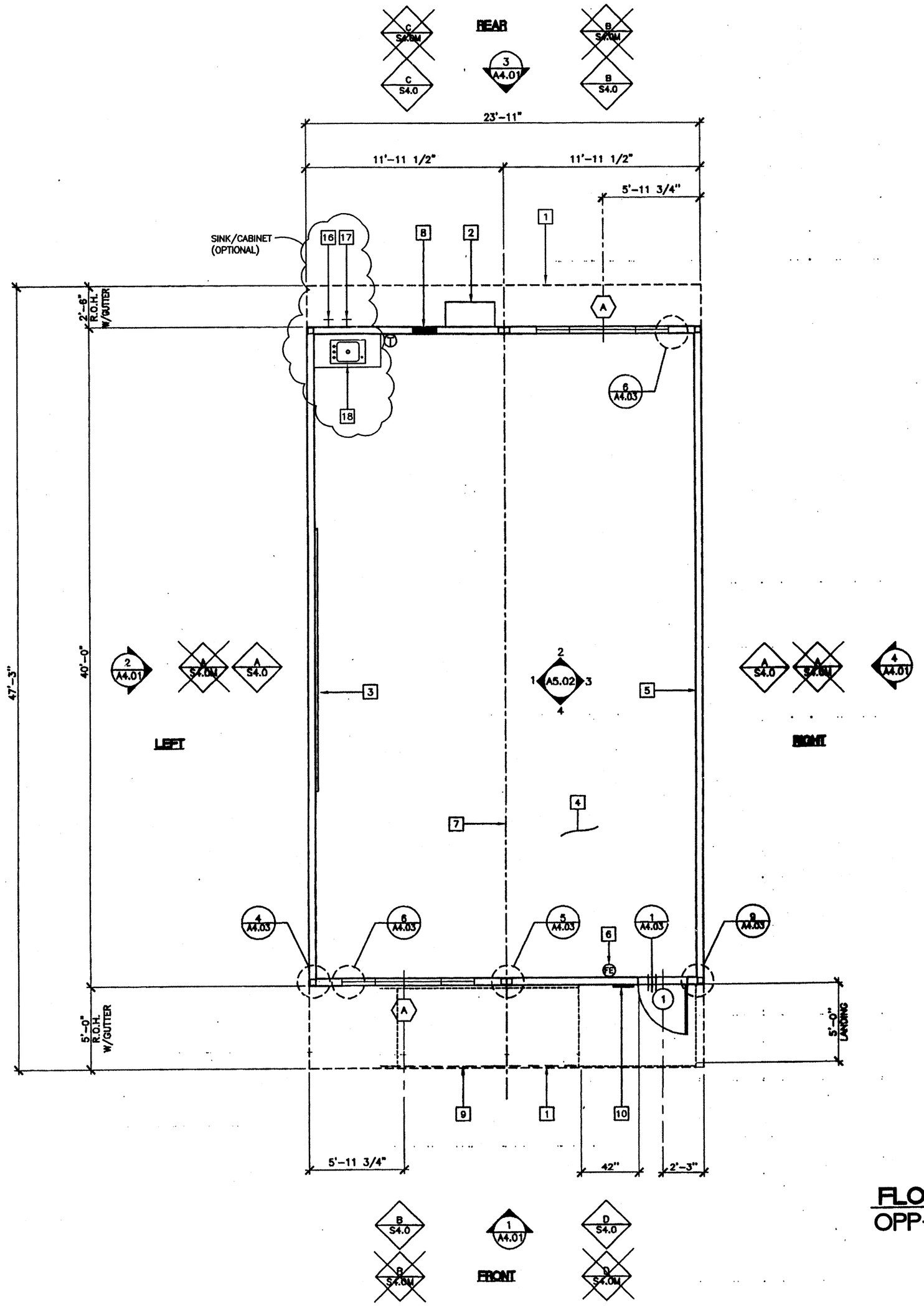

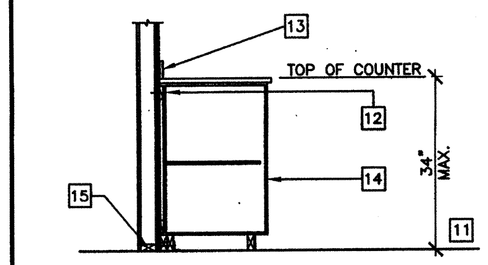

NOTES:
1. SEE PLANS AND ELEVATIONS FOR EACH SPECIFIC DESIGN.
2. REMOVE TOE KICK AND BASE FOR ACCESSIBLE CONDITION
3. PROVIDE U SHAPED WIRE PULLS AT ALL ACCESSIBLE CASEWORK OR EQUAL.

(OPTIONAL)

SCALE: NTS

BASE CABINET ANCHORAGE 1

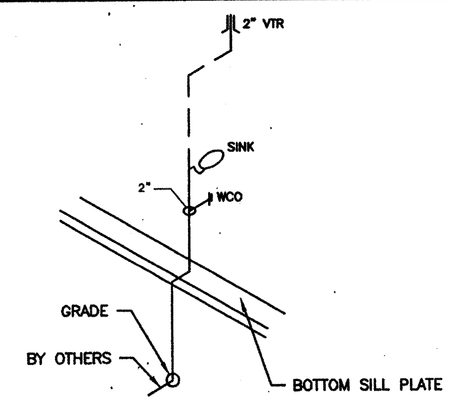

(OPTIONAL)

SCALE: NTS

PIPE SHALL BE TYPE ABS

SINK CABINET WASTE 2

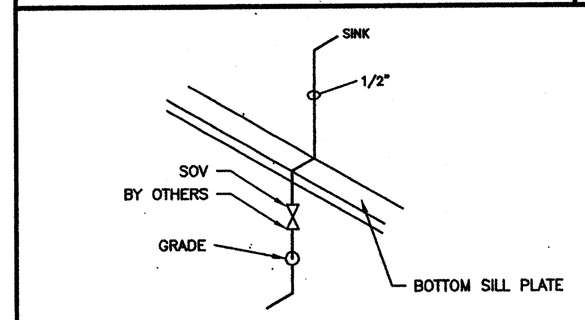

(OPTIONAL)

SCALE: NTS

PIPE SHALL BE TYPE 'L' COPPER

SINK CABINET COLD WATER SUPPLY 3

KEY NOTES

1. ROOF OVERHANG
2. HVAC UNIT (HV)
3. 2 – 8'x4' PORCELAIN STEEL MARKER BOARDS (SEE SPEC'S FOR TYPE)
4. FINISH FLOORING (FIN)
5. INTERIOR FINISH (FIN)
6. FIRE EXTINGUISHER – 5 LBS DRY CHEMICAL WITH 2A-10BC UL RATING WALL MOUNTED BRACKET, HANDLE AT 48" A/F
7. MODLINE (M)
8. ELECTRICAL PANEL
9. RAMP/LANDING (RAMP) SEE RAMP DRAWINGS
10. SIGNAGE PROVIDED AND INSTALLED BY DISTRICT PRIOR TO OCCUPANCY, SEE A6.02
11. FINISH FLOOR
12. 4"x22 GA CONTINUOUS METAL STRAPS WITH #14 STSMS AT 24" OC
13. BACK SPLASH
14. BASE CABINET
15. BOTTOM PLATE
16. COLD WATER P.O.C. SEE DETAIL # 3
17. WASTE P.O.C. SEE DETAIL # 2
18. CLASSROOM SINK, TYP. SEE A5.02
    SINK: CRAC–ADA–1725–A–GR
    FAUCET: CHICAGO 350, BUBBLER: JSB 10

(OPTIONAL)

NOTES

1. METAL TAG ON ALL MODULES. MECHANICALLY ATTACHED TO REAR EXTERIOR OF BUILDING SHOW D.S.A. APPLICATION NUMBER. MANU-FACTURER'S NAME AND SERIAL NUMBER.
2. METAL TAG MIN. 3 1/2"X1 1/2" STAMPED METAL I.D. W/
   1. OPSC BUILDING NUMBER
   2. DESIGN WIND LOAD
   3. DESIGN ROOF LOAD
3. PROVIDE MIN. 3 1/2"X1 1/2" METAL TAG INSTALLED INSIDE THE ELECTRICAL PANEL SHOWING OPSC NUMBER AND DSA NUMBER.
3. BLDG. MANUFACTURER RO VERIFY W/ CUSTOMER IF SINK AND CABINET OPTION APPLIES.

IDENTIFICATION STAMP
DIV. OF THE STATE ARCHITECT
OFFICE OF REGULATION SERVICES
AC FLS SS
DATE JUL 17 2003

IDENTIFICATION STAMP
DIV. OF THE STATE ARCHITECT
AC
DATE JUL 17 2003

IDENTIFICATION STAMP
DIV. OF THE STATE ARCHITECT
AC
DATE 12-2-2016

FLOOR PLAN
OPP-HAND

24x40
SCALE: 1/4" = 1'-0"

FILE PATH:

PROJECT NO. 4736

PC-04-104796

REVISIONS
1
2
3
4
5

Electrical Engineer's Seal

Mechanical Engineer's Seal

PC Professional of Record Seal
LICENSED ARCHITECT
REED WINZER MALLOCH
No. C-8459
12/31/05
RENEWAL DATE
STATE OF CALIFORNIA

Architects Seal

PC
CBC 2001
IDENTIFICATION STAMP
DIV. OF THE STATE ARCHITECT
OFFICE OF REGULATION SERVICES
PC 04-104796
AC FLS SS
DATE 5/2/03

MODTECH INC.™
2830 BARRETT AVENUE FAX (909) 943-4014
PERRIS, CALIF. 92572 FAX (909) 940-0427

PROJECT NUMBER: 4736
WILLIAM SCOTTSMAN

© MODTECH, INC. 2002
ALL RIGHTS RESERVED

DRAWN BY: GL
DATE: 07/07/03
CHECKED BY:
DATE:

MODTECH Project No.

FLOOR PLAN

A1.1

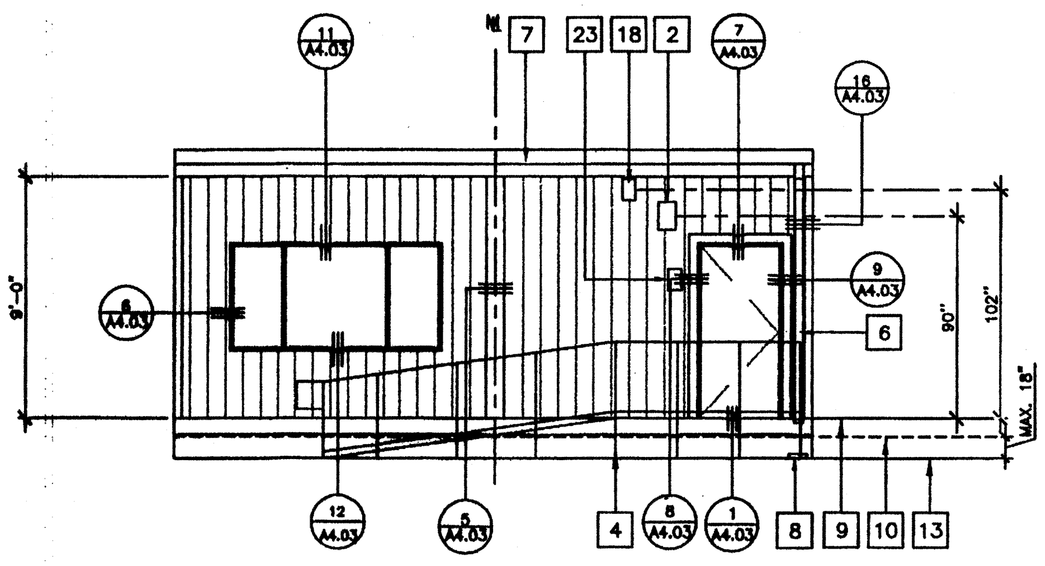

1 FRONT ELEVATION
OPP-HAND

1/4" = 1'-0"

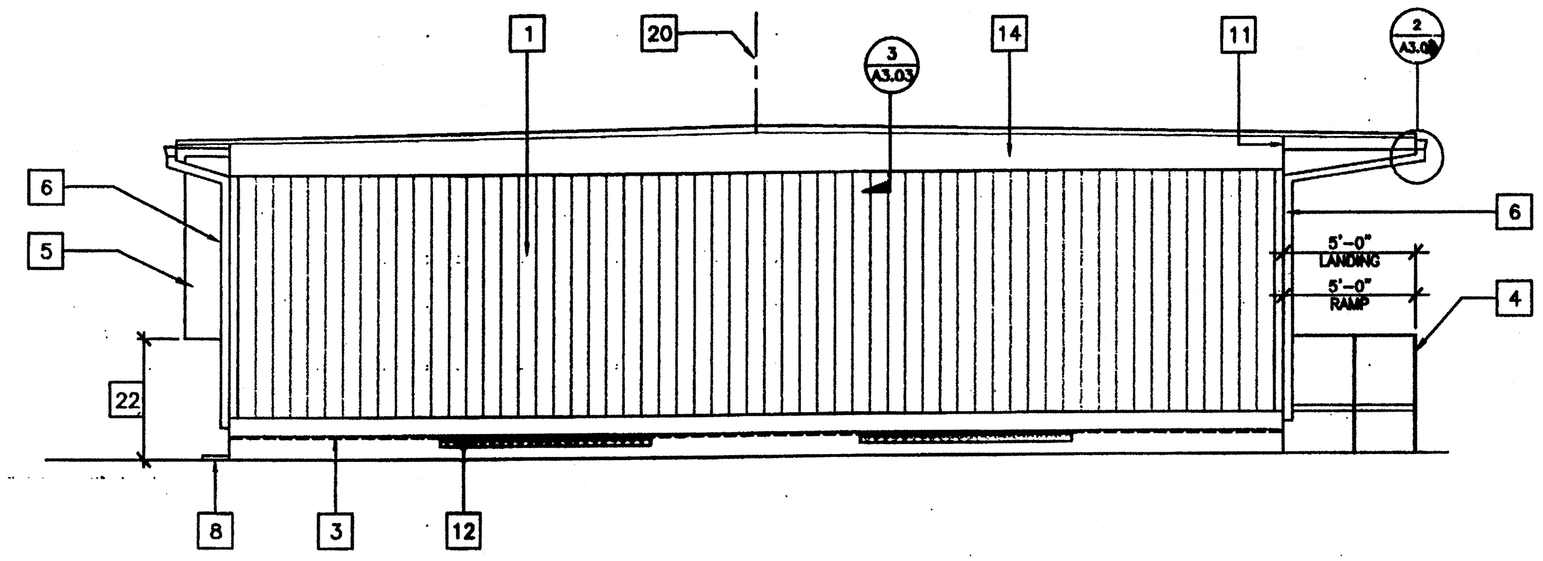

2 LEFT ELEVATION

1/4" = 1'-0"

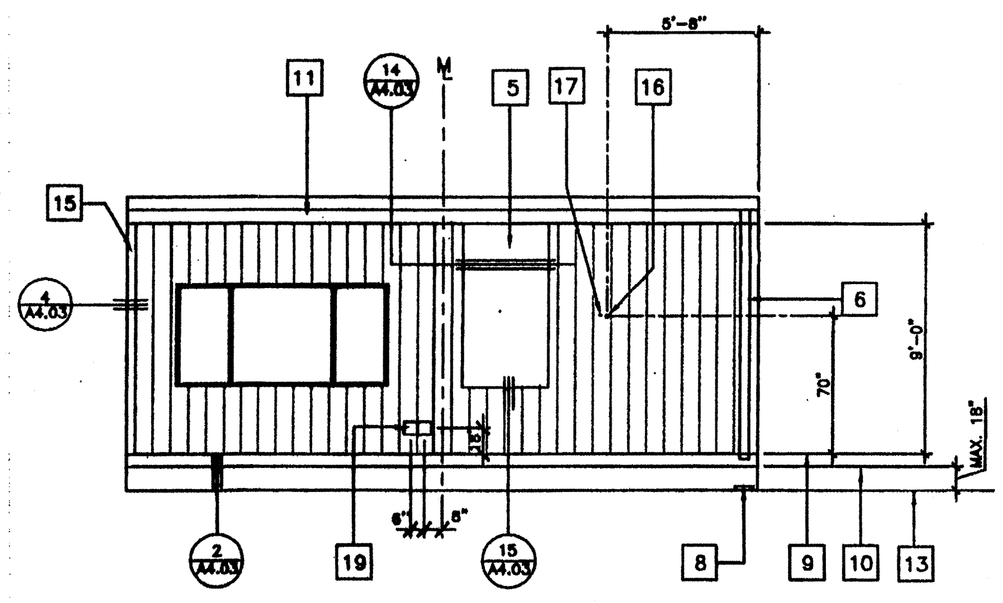

3 REAR ELEVATION
OPP-HAND

1/4" = 1'-0"

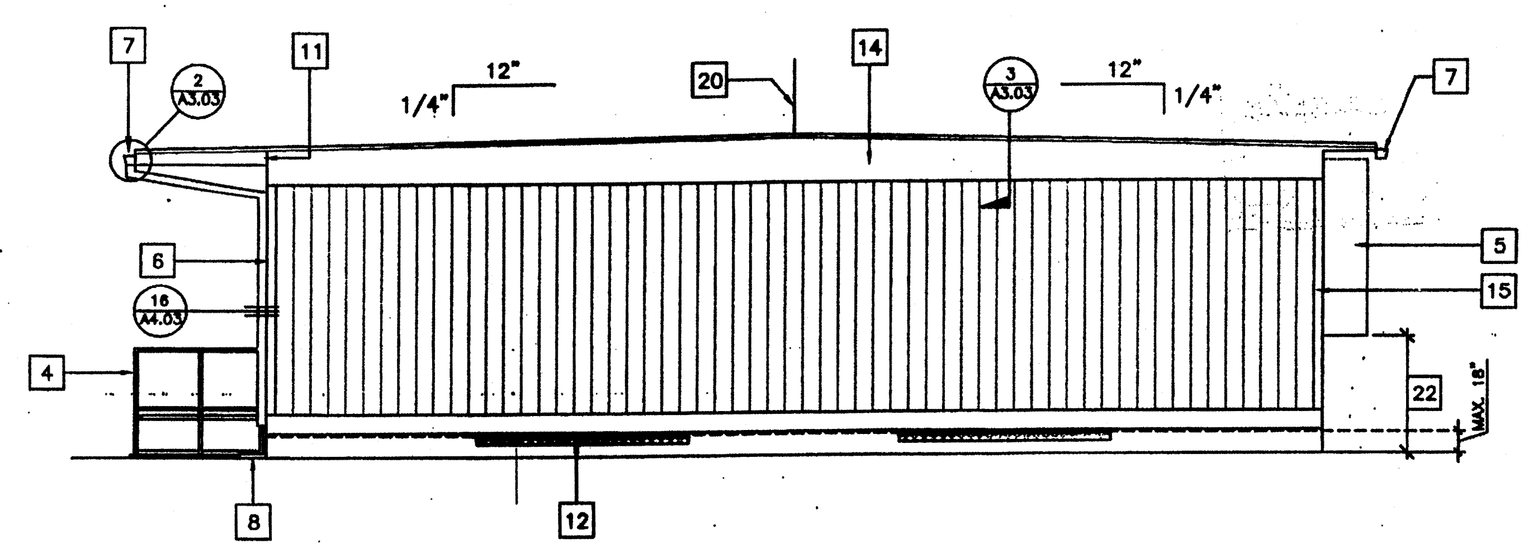

4 RIGHT ELEVATION

1/4" = 1'-0"

KEY NOTES

1. TYPICAL EXTERIOR SIDING (SEE A6.02)
2. EXTERIOR LIGHT FIXTURE (SEE SPEC'S)
3. TOP OF SKIRTING
4. RAMP AND LANDING RAMP SEE RAMP DRAWINGS
5. HVAC UNIT. SEE HV
6. DOWNSPOUT (TYP.) FOR (2). FASTEN TO BLD'G. TYP 3 PLACES (SEE 16/A4.03)
7. CONTINUOUS GUTTER WITH DOWNSPOUT (LOCATION OF DOWNSPOUT SHOWN ON ROOF PLAN) SEE A3.01
8. SPLASH BLOCK (BY OTHERS)
9. FINISH FLOOR LINE
10. BOTTOM FLANGE OF FLOOR BEAM
11. ROOF HEADER
12. VENT. SEE FOUNDATION PLAN
13. FINISH GRADE
14. ROOF BEAM SEE STR
15. COLUMN SEE STR
16. ELECTRICAL STUB-OUT SEE EL
17. GROUND STUB-OUT SEE EL
18. J BOX FOR EXT. FA HORN SEE EL
19. NEMA 6" X 6" GUTTER BOX SEE EL
20. RIDGE
21. NOT USED
22. IF HVAC UNIT IS LOCATED IN ANY PATH OF TRAVEL OR CIRCULATION AREA AND HEIGHT FROM GRADE TO BOTTOM OF UNIT EXCEEDS 27" THEN PROTECTION MUST BE PROVIDED BY DISTRICT PRIOR TO OCCUPANCY
23. SIGNAGE PROVIDED AND INSTALLED BY DISTRICT PRIOR TO OCCUPANCY. SEE SHEET A6.02

NOTES

1. SEE FOUNDATION PLAN FOR SIZE AND LOCATION OF UNDER FLOOR VENTS.

IDENTIFICATION STAMP
DIV. OF THE STATE ARCHITECT
OFFICE OF REGULATION SERVICES
[redacted]
AC. AS FLS. / SS. M
DATE JUL 17 2003

JUL 10 2003

IDENTIFICATION STAMP
DIV. OF THE STATE ARCHITECT
AC. 4 SC. 6C
DATE 8-2-2012

FILE PATH:

PROJECT NO. 4736

REVISIONS		
1		
2		
3		
4		
5		

Electrical Engineer's Seal

Mechanical Engineer's Seal

PC Professional of Record Seal

LICENSED ARCHITECT FREDERICK MALLACK No. C-24629 12/31/03 RENEWAL DATE STATE OF CALIFORNIA

Architects Seal

PC CBC 20[redacted]
IDENTIFICATION STAMP
DIV. OF THE STATE ARCHITECT
OFFICE OF REGULATION SERVICES
[redacted]
AC. FLS. SS.
DATE 5/5/03

MODTECH INC.™
2830 BARRETT AVENUE FAX (909) 943-4014
PERRIS, CALIF. 92572 FAX (909) 940-0427

PROJECT NUMBER: 4736
WILLIAM SCOTTSMAN

© MODTECH, INC. 2002
ALL RIGHTS RESERVED

DRAWN BY: GL
DATE: 07/07/03
CHECKED BY:
DATE:

MODTECH Index No.

EXTERIOR ELEVATIONS W/ FASCIA

A4.01

PC-04-104796

CLASS LEASING, LLC.

1221 Harley Knox Blvd. Perris, CA 92571-7408
(951) 943-1908 Fax (951) 943-5768

3.01 **CARPENTRY:**

1. Scope of Work: Contractor shall provide all labor, materials and services to install carpentry.

2. Workmanship:
   a) FRAMING: securely nailed, bridged and blocked to form rigid structure. Work cut, fitted and assembled level, plumb and true to line. Trim in as long lengths as possible with all standing trim in one piece. Trim sealed at all edges.

   b) NAILING: in accordance with the title 24 CCR-Table 2304.9.1. Nails shall be corrosion resistant box nails.

   c) Machine applied nailing shall have prior demonstration and approval by DSA Field Inspector and the Architect. The approval is subject to continuous satisfactory performance. Plywood shall have a minimum thickness of 3/8". If nail heads penetrate the outer ply more then would be normal for a hand hammer or if minimum allowable edge distances are not maintained, the performance will be deemed unsatisfactory.

   d) TRIM: sealed at all edges. Sealant painted to match trim or siding.

4.01 **MATERIAL SPECIFICATIONS:**

1. Structural framing shall be Hem Fir- Larch graded in accordance with the standard grading rules of the Western Wood Products Association or standard grading rules No. 16 of the West Coast Lumber Inspection Bureau, latest editions. Grades shall be as follows unless noted otherwise on the drawings. (Hem Fir South is not allowed.) Each piece shall be grade marked and no piece may fall below grades indicated. All framing except as noted Hem Fir No. 2
2. Plywood shall be as shown on these drawings with exterior glue in accordance with U.S. Product Standard PS 1-07. All panels shall be marked with an APA grade mark with an identification index as shown on drawings. Use 4'x8' panels- minimum, except at boundaries and at framing changes where minimum panel dimension shall be 24" at roofs and floors and 12" at walls.
3. Bolts for timber connections shall conform to ANSI/ASME Standard B18.2.1-2012 & 2012 edition of NDS (the National Design Specification for Wood Construction by the National Forest Products Association). Bolts shall be installed in accordance with the requirement of 2012 NDS.
   Bolt holes shall be 1/32 to 1/16 inch larger than bold diameter. Bolts shall be full body steel bolts with minimum yield strength of 45,000 PSI. Re-tighten bolts before closing in work.
4. Lag screws shall be steel and conform to ANSI/ASME Standard B18.2.1 and 2012 NDS. Holes for lag screw shanks shall be bored the same depth and diameter as the shank. The remaining depth of penetration of the screw shall be bored to 70% of the shank diameter. One quarter inch (1/4") diameter lag screws need not have pre-drilled holes if it can be shown that wood members are not damaged during installation. Provide full diameter body lag screws with bending yield strengths per Table 11J in NDS
5. Provide malleable iron washers or equivalent cut plate washers (not less than a standard cut washer) under nuts and bolt or lag screw heads which bear on wood.
6. Wood screws shall conform to ANSI/ASME Standard B18.6.1 and the requirements of the 2012 NDS. Galvanized or other corrosion resistant coating where exposed to weather or used in foundations.
   Screws shall be steel with cut threads and bending yield strengths per Table 11L in NDS.
7. Wood members shall be cut or notched only as shown on structural drawings.
8. When required nailing tends to split wood members, nail holes shall be pre-bored to 3/4 of the nail diameter.
9. Structural nailing shall be with BOX NAILS per all requirements of 2012 NDS. Nailing not specifically indicated shall comply with CCR Title 24, Part 2, Table 2304.9.1. All nails shall be galvanized or other corrosion resistant coating where exposed to weather, in foundations and as noted on plans, per the requirements of CCR Title 24, Part 2, with minimum bending yields per table 11N in NDS. (See nail equivalence below.)
10. Nail equivalence:
    (provide minimum nail lengths as required for specified penetration, TYPICAL: U.N.O.)

    6d equals .113" DIA. - provide 1.36" minimum point penetration
    8d equals .131" DIA. - provide "1.57" minimum point penetration

11. Pressure preservative treatment shall be per Section 2303.1.8, CCR Title 24, Part 2. Provide quality mark on all treated foundation members that comply with CBC 2303.1.8.1. All foundation members shall be marked as "For ground contact" or "For above ground use" as appropriate. Pressure treated material shall comply with AWPA Standard U1 as required by CBC 2303.1.8. Treat all cut ends of pressure treated members with an approved preservative. (Wilsonil W/B Copper Green 2% or an approved equivalent). Where noted, members below the sub floor that are not a part of the foundation shall be pressure treated.
12. Only material in contact with ground needs to be pressure treated, all other foundation lumber can be DF or HF#2 or equal.
13. If machine nailing is utilized for this project, contractor shall comply with all requirements of CCR Title 24, Part 2. Machine nailing is subject to approval by the Structural Engineer or Architect and the Division of the State Architect.
14. Fasteners for pressure-preservative treated and fire-retardant treated wood shall comply with Section 2304.9 of CBC.
15. Nails and spikes used in wet or exterior locations shall comply with Section 2304.9.1.1 of CBC.
16. Shim material shall be plywood CD EXP 1 or equal (not pressure treated).
17. Used lumber in good condition is acceptable for use in foundation system.
18. Tie plates shall conform to A-1011 Grade 33.

5.01 **SITE INSTALLATION REQUIREMENTS FOR DSA CLASSROOM BUILDINGS:**

In the case of equipment located in the State of California, the LESSEE (School District) is responsible for the site being cleared (free of grass, trees, shrubs, etc) and graded to within 4 1/2" of level grade for each building. If the site exceeds the 4 1/2" level grade requirement additional costs may be charged to lessee.

Under no circumstances should the site be greater that 9" from level grade or have less than a 1000 PSF MINIMUM SOIL BEARING PRESSURE.

Prior to delivery, the lessee shall mark the four corners of the building on the site, including door location. Should special handling be required to either place, install or relocate the classroom on the lessee's site due to site obstruction such as fencing, landscaping, other classrooms, etc., additional costs will be charge to the lessee.

6.01 **TEST AND INSTALLATION:**

1. Provide Electrical Grounding Test per DSA IR E-1.
2. Field Welding for welded tie plate option. (If used, requires Test and Inspection.)

   The example form DSA 103's shown on this sheet are for illustration purposes only.
   A form DSA 103 is to be completed for each application that this PC is being incorporated into and all example form DSA-103's are to be crossed out on this drawing.

3. No other tests and inspections are required.

SPECIFICATIONS
RELOCATABLE CLASSROOMS

1.01 **GENERAL REQUIREMENTS:**

1. The requirements of the general conditions of the agreement and these General Requirements apply to the several trade sections with the same force as though fully repeated in each section.
2. Name brands are indicated to establish a standard of quality. Items of equal or better quality may be substituted for the listed brand named products.

1.02 **SCOPE OF WORK:**

1. The work consists of installing on-site, modular Relocatable buildings as defined herein, shown and detailed on the drawings.
2. All requirements of CCR (California Code of Regulation) Title 19 and 24 relating to inspections and verified reports shall be complied with and shall include:

   a) General responsible charge of Field Administration by the Architect of Record.

   b) Inspection during the course of construction by an inspector approved by DSA (Division of the State Architect) and the District Architect. The inspector shall be responsible for and approved to inspect the general construction, welding, mechanical and electrical work. Cost of these inspections shall be borne by the School District.

   c) On site inspection of the building installation, electrical and utility of the building installation or connection by an inspector approved by the DSA and retained by the School District.

   d) Other special tests or inspections as may be required by DSA.
   Cost of these inspections/tests shall be borne by the School District.

1.03 **WORK NOT INCLUDED:**

1. All on-site or off-site utilities and the connection of them to the building unless indicated on the drawings.
2. All leveling, grading or other site preparation (except concrete or wood leveling strips, where Required) unless otherwise indicated on the drawings.
3. Fire alarm system, program bell, clock, public address system, intercom system, TV system, computer data or any other low voltage system, unless otherwise indicated on the drawings or the lease agreement.

1.04 **ACCESSIBILITY OF SITE:**

The School District shall provide access to the site for the installation of the building. Removal of trees, shrubs, fencing, sprinklers, etc. necessary for move-in and removal of the buildings shall be the responsibility of the School District.

2.01 **SITE ASSEMBLY:**

1. Scope of Work: Contractor shall provide all labor, materials and services to prepare the building elements, transport them from the plant to the site and to complete the assembly at the site.

   The condition of the site, such as drainage and soil bearing capacity, shall be the responsibility of the School District and the District Architect.

2. Assembly of Elements:
   a) In a location on the site as determined by the District Architect. The contractor shall place the foundation as detailed on the drawings.

   b) The elements shall be brought to the site on wheel assembly and transferred to the prepared site. Great care shall be taken to avoid damage to the elements by racking or bumping.

   c) Connection of the elements together shall be done according to instructions on the drawings. Flashing, trim and other loose items shall be installed per plans and details of the original building manufacturer's drawings.

DSA — DEPARTMENT OF GENERAL SERVICES

DSA-103 (Rev 12/2012)
Statement of Structural Tests & Special Inspections - 2013 CBC

INCREMENT #: DSA File No.:
Application No.:
Date Submitted: Revised:
Revised:

Submittal Status: SAMPLE: FOR WELD PLATE OPTION ONLY | Status:

IMPORTANT! Title form is only a summary list of structural tests and special inspections required for this project. The actual tests and inspections shall be performed as detailed on the DSA approved documents. The project inspector is responsible for providing inspection of all tests of construction, including but not limited to, special inspections not listed on this form such as structural wood framing, high-lateral wood diaphragms, cold-formed steel framing, anchorage of non-structural components, etc., per Title 24, Part 2, Chapter 17A. NOTE: This form is also available for per-jects. Submittal for review under the 2007 and 2010 CBC.

INSTRUCTIONS: Click a plus sign (+) before any category or subcategory to reveal additional tests and special inspections. An "X" before a listed test or inspection indicates it is a mandatory requirement. A shaded box indicates a test or special inspection that may be required, depending on the scope of the construction and other issues. A shaded box can be clicked indicating your selection of that test. Under A minus (-) on a category or subcategory heading indicates that it can be collapsed. However, any selections you may have made will be cleared. Click on the "COMPILE" button to show only the tests finally selected. For more information on use of this form, see DSA-IR6.INSTR.

Note: References are to the 2012 edition of the California Building Code (CBC) unless otherwise noted.

Mandatory	Optional	TEST OR SPECIAL INSPECTION	Test*	Continuous	Periodic	CODE REFERENCE AND NOTES
		+ SOILS				
		+ CONCRETE				Table 1705.3
		+ MASONRY				TMS 402-11/ACI 530-11/ASCE 5-11 Table 1.18.3
		- STEEL				Table 1705.2.1
		- 17. STRUCTURAL STEEL AND COLD-FORMED STEEL USED FOR STRUCTURAL PURPOSES				
		Material Verification				
	X	a. Verify that all materials are appropriately marked and that: • Mill certificates indicate material properties that comply with requirements, • Material plates, bars and shapes comply with requirements.	Periodic		*	* By special inspector when performed off-site, by project inspector for steel shipped directly to project site without welding or fabrication.
	X	b. Test unidentified materials	Test		Lab	ASTM A370 (2003) (1), ASTM A370.
		Inspection				
	X	c. Verify member location, bracing and all details conform to the field.	Continuous	PI		
	X	d. Verify stiffener location, connection tab location and all construction details fabricated in the shop.	Periodic	SI		
		19. WELDING				DSA IR 17-5, AWS D1.1 and AWS D1.3 (AWS D1.3 for cold formed steel).
		Verification of Materials, Equipment, Welders, etc.				
	X	a. Verify weld filler metals identification markings per AWS designation listed on the DSA approved documents and the WPS.	Periodic	SI		
	X	b. Verify welder and the material manufacturer of welder certification.	Periodic	SI		
	X	c. Verify WPS, welder qualifications and equipment.	Periodic	SI		DSA IR 17-5.
		19.2 FIELD WELDING				
	X	a. Inspect single-pass fillet welds ≤ 5/16"	Periodic	SI		Per AWS 360 (and AISC 341 as applicable), DSA IR 17-5.
		+ WOOD				
		+ OTHER				

1 Field Welding Inspection Special Inspection Verified Report - Form DSA-282

KEY to Columns

1 Type -	2 Performed By -
Continuous – Indicates that a continuous special inspection is required	GE – Indicates that the special inspection is to be performed by a registered geotechnical engineer or his or her authorized representative
Periodic – Indicates that a periodic special inspection is required	Lab – Indicates that the test or inspection is to be performed by a testing laboratory accepted in the DSA Laboratory Evaluation and Acceptance (LEA) Program. See section 4-335, 2019 CCR, Title 24, Part 1.
Test – Indicates that a test is required	PI – Indicates that the special inspection is to be performed by the project inspector
	SI – Indicates that the special inspection is to be performed by a special inspector

APPLICABLE BUILDING CODES
ALL NEW WORK SHALL COMPLY AND CONFORM TO THE REQUIREMENTS OF THE 2013 CBC

2013 CALIFORNIA CODE OF REGULATIONS (CCR) As of January 01, 2014*
-2013 CALIFORNIA BUILDING STANDARDS ADMINISTRATIVE CODE PART 1, TITLE 2
(2012 INTERNATIONAL BUILDING CODE VOLUMES 1-2 WITH 2013 CALIFORNIA AMENDMENTS)

-2013 CALIFORNIA ELECTRICAL CODE (CEC) PART 3, TITLE 24, CCR
(2011 NATIONAL ELECTRICAL CODE WITH 2013 CALIFORNIA AMENDMENTS)

-2013 CALIFORNIA MECHANICAL CODE (CMC) PART 4, TITLE 24, CCR
(2012 UNIFORM MECHANICAL CODE WITH 2013 CALIFORNIA AMENDMENTS)

-2013 CALIFORNIA PLUMBING CODE (CPC) PART 5, TITLE 24, CCR
(2012 UNIFORM PLUMBING CODE WITH 2013 CALIFORNIA AMENDMENTS)

-2013 CALIFORNIA ENERGY CODE (CEC) PART 6, TITLE 24, CCR*

-2013 CALIFORNIA FIRE CODE PART 9, TITLE 24, CCR
(2012 INTERNATIONAL FIRE CODE WITH 2013 CALIFORNIA AMENDMENTS)

-2013 CALIFORNIA REFERENCED STANDARDS CODE PART 12, TITLE 24, CCR

TITLE 19 CCR PUBLIC SAFETY, STATE FIRE MARSHALL REGULATIONS.

DESIGN DATA:

FLOOR LIVE LOAD = 50 PSF, 50 + 20 PSF PARTITIONS, 100 PSF
ROOF LIVE LOAD = 20 PSF REDUCIBLE FOR TRIBUTARY AREA
WIND SPEED =120 MPH (V) (3 SECOND GUST), K zt = 1.0
SNOW LOAD: PROJECT IS NOT LOCATED IN A SNOW REGION.
BUILDING CODES = 2012 IBC AND CBC 2013

SEISMIC DESIGN DATA: MOMENT FRAME PC'S
Basic Seismic-Force-Resisting System = STEEL MOMENT FRAME
ANALYSIS PROCEDURE USED = EQUIVALENT LATERAL FORCE
Seismic Design Category = E (per CBC Section 1613A.5.6)
Design Base Shear: 24x40 BUILDING = 9460 # (Roof, Floor, Walls & Partitions)
30x40 BUILDING = 14190 # (Roof, Floor, Walls & Partitions)
48x40 BUILDING = 19020 # (Roof, Floor, Walls & Partitions)

I: = 1.0 Cs= 0.411 R: = 3.5 SITE CLASS = D
Ss = 2.7 mapped value / 0.6 Sa = 2.16 (For Design)
Sds = 1.44 (Site Specific Documentation Justifying SDS Shall Be Submitted To DSA Prior
S1 = 1.3 per CBC Figure 1613A.5(2) S01 = 1.3 To Approval)
RISK CATEGORY = II

FLOOD DESIGN DATA: Project is not located in a flood zone.

SEISMIC DESIGN DATA: SHEAR WALL PC'S
Basic Seismic-Force-Resisting System = WOOD PANEL SHEAR WALLS
ANALYSIS PROCEDURE USED = EQUIVALENT LATERAL FORCE
Seismic Design Category = E (per CBC Section 1613A.5.6)
Design Base Shear: 24x40 BUILDING = 9460 # (Roof, Floor, Walls & Partitions)
30x40 BUILDING = 14190 # (Roof, Floor, Walls & Partitions)
48x40 BUILDING = 19020 # (Roof, Floor, Walls & Partitions)

I: = 1.0 Cs= 0.222 R: = 6.5 SITE CLASS = D p = 1.3
Ss = 2.7 mapped value / 0.6 Sa = 2.16 (For Design)
Sds = 1.44 (Site Specific Documentation Justifying SDS Shall Be Submitted To DSA Prior
S1 = 1.3 per CBC Figure 1613A.5(2) S01 = 1.3 To Approval)
RISK CATEGORY = II

LIMITATIONS FOUNDATION PC ONLY:

FOUNDATION ONLY PC IS DESIGNED TO SUPPORT THE SUPERSTRUCTURE FOR THE RELOCATABLE BUILDINGS AS LISTED ON THIS DRAWING.

THE DESIGN CALCULATIONS ARE BASED ON THE FOLLOWING:

1. DSA APPROVED STOCKPILE BUILDINGS
2. ROOF OVERHANGS OF 5'-0" MAXIMUM
3. SINGLE SLOPE OR DUAL SLOPE BUILDINGS
   WALL HEIGHT: 9'-0" MAXIMUM ON DUAL SLOPE BUILDING.
   WALL HEIGHT: 10'-4" MAXIMUM ON SINGLE SLOPE BUILDING.
   (HEIGHT DETERMINED FROM FINISH FLOOR IN BUILDING TO BOTTOM OF STEEL ROOF STRUCTURE: BEAMS OR ROOF HEADERS)
   WALL HEIGHT: 9'-10" MAXIMUM ON SHEAR WALL-DUAL SLOPE BUILDING
4. WALL DEAD LOAD OF 10 PSF (NO STUCCO)
5. FLOOR DEAD LOAD OF 8 PSF

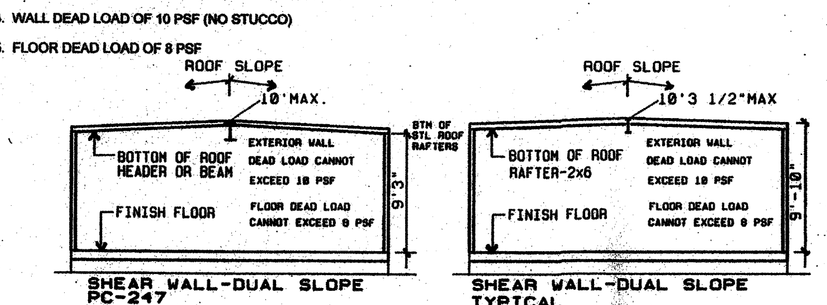

SHEAR WALL-DUAL SLOPE PC-247 | SHEAR WALL-DUAL SLOPE TYPICAL

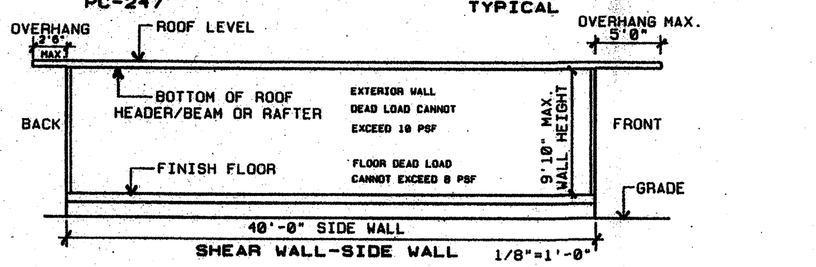

SHEAR WALL-SIDE WALL 1/8"=1'-0"

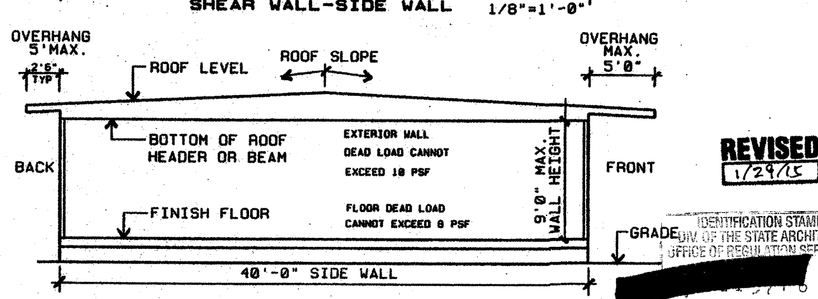

DUAL SLOPE ROOF 1/8"=1'-0"

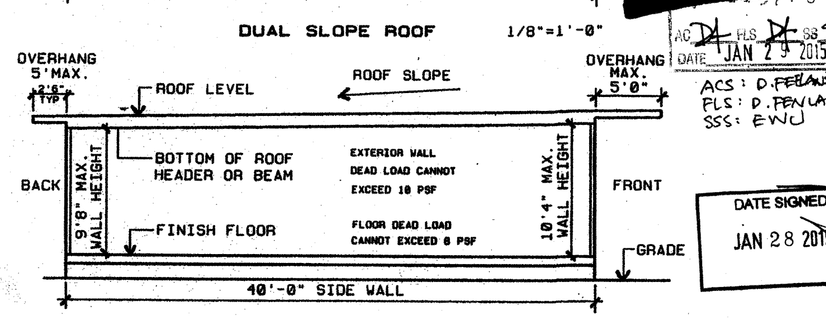

MONO SLOPE ROOF 1/8"=1'-0"

TYPICAL ELEVATIONS ARE SHOWN TO CLARIFY FOUNDATION PC ONLY LIMITATIONS DOCUMENTATION SHALL BE PROVIDED BY ENGINEER OF GENERAL RESPONSIBLE CHARGE TO BE REVIEWED AND APPROVED BY THE DSA STRUCTURAL PLAN REVIEWER.

SCOPE OF WORK: DSA FOUNDATION PLANS FOR EXISTING STOCKPILE BUILDINGS FOR CLASS LEASING, LLC.

SHEET INDEX: STOCKPILE BUILDING FOUNDATION– 2013 CODE UPDATE

F1.0 COVER SHEET, BUILDING DATA, STOCKPILE APPROVAL INDEX
F2.0 24x40 50 PSF FOUNDATION PLAN AND DETAILS, ADJACENT BUILDING PAD
F2.1 24x40 50+20 PSF FOUNDATION PLAN AND DETAILS, ADJACENT BUILDING PAD
F3.0 36x40 50 PSF FOUNDATION PLAN AND DETAILS, ADJACENT BUILDING PAD
F3.1 36x40 50+20 PSF FOUNDATION PLAN AND DETAILS, ADJACENT BUILDING PAD
F3.2 36x40 100 PSF FOUNDATION PLAN AND DETAILS, ADJACENT BUILDING PAD
F4.0 48x40 50 PSF FOUNDATION PLAN AND DETAILS, ADJACENT BUILDING PAD
F4.1 48x40 50+20 PSF FOUNDATION PLAN AND DETAILS, ADJACENT BUILDING PAD
F4.2 48x40 100 PSF FOUNDATION PLAN AND DETAILS, ADJACENT BUILDING PAD

SHEET INDEX:
BELOW GRADE CONCRETE FOUNDATION DESIGNED FOR MODTECH BUILDINGS ONLY

C1.0 COVER SHEET, BUILDING DATA, STOCKPILE APPROVAL INDEX
C2.0 24 x 40 - 50 PSF CONCRETE FOUNDATION PLAN & DETAILS, ADJACENT BUILDING PAD
C2.1 24 x 40 - 50+20 PSF CONCRETE FOUNDATION PLAN & DETAILS, ADJACENT BUILDING PAD
C3.0 36 x 40 - 50 PSF CONCRETE FOUNDATION PLAN & DETAILS, ADJACENT BUILDING PAD
C3.1 36 x 40 - 50+20 PSF CONCRETE FOUNDATION PLAN & DETAILS, ADJACENT BUILDING PAD
C3.2 36 x 40 - 100 PSF CONCRETE FOUNDATION PLAN & DETAILS, ADJACENT BUILDING PAD
C4.0 48 x 40 - 50 PSF CONCRETE FOUNDATION PLAN & DETAILS, ADJACENT BUILDING PAD
C4.1 48 x 40 - 50+20 PSF CONCRETE FOUNDATION PLAN & DETAILS, ADJACENT BUILDING PAD
C4.2 48 x 40 - 100 PSF CONCRETE FOUNDATION PLAN & DETAILS, ADJACENT BUILDING PAD

ADJACENT BUILDINGS: ONLY THOSE BUILDINGS MANUFACTURED BY THE SAME COMPANY MAY BE PLACED ADJACENT TO EACH OTHER

CLASS LEASING-APPROVED STOCKPILE A NUMBERS FOR THIS FOUNDATION PC

BUILDING DATA - 24 x 40 SHEAR WALL

STKP #	DSA #	PC-BASE	DATE	SIZE	FLOOR LOAD	BLDG MFG
STKP 1029	50643	SHR	10-21-1988	24 x 40	50+20#	MODTECH
STKP 02	52612	48133-SHR	11-06-1989	24 x 40	50#	MODTECH
STKP 01	52613	46790-SHR	11-06-1989	24 x 40	50#	MODTECH
STKP 03	52614	SHR	11-06-1989	24 x 40	50#	MODTECH
STKP 05	52615	45400-SHR	12-07-1989	24 x 40	50#	AURORA
STKP 04	52616	SIM PC 29 SHR	12-07-1989	24 x 40	50#	MODTECH
STKP 22	55113	PC 80	10-08-1990	24 x 40	50#	MODTECH
STKP 24	55560	PC 95	06-14-1994	24 x 40	50#	MODTECH
STKP 13	61967	PC 247	06-29-1994	24 x 40	50#	MODTECH
STKP 77	67970	PC 247	11-10-1997	24 x 40	50#	MODTECH

BUILDING DATA - 24 x 40 RIGID FRAME

STKP #	DSA #	PC-BASE	DATE	SIZE	FLOOR LOAD	BLDG MFG
STKP 11	52462	MRF	06-13-1991	24 x 40	50+20#	MODTECH
STKP 20	55031	PC 79	09-18-1990	24 x 40	50#	MODTECH
STKP 21	55032	PC 79	09-18-1990	24 x 40	50#	MODTECH
STKP 23	55347	PC 79	11-26-1990	24 x 40	50#	MODTECH
STKP 5W	57194	PC 79	11-08-1991	24 x 40	50+20#	MODTECH
STKP 14	57679	PC 96	03-19-1992	24 x 40	50#	MODTECH
STKP 18	63288	PC 243	05-04-1995	24 x 40	50#	MODTECH
STKP 19	63321	PC 242	06-11-1995	24 x 40	50#	MODTECH
STKP 27	65493	PC 266	07-31-1996	24 x 40	50#	MODTECH
STKP 31	66318	PC 266	11-12-1996	24 x 40	50+20#	MODTECH
STKP 33	67333	PC 266	03-11-1997	24 x 40	50#	MODTECH
STKP 35	04-100117	PC 266	01-15-1998	24 x 40	50+20#	MODTECH
STKP 39	04-100595	PC 275	08-10-1998	24 x 40	50+20#	MODTECH
STKP 37	04-100596	PC 266	08-10-1998	24 x 40	50+20#	MODTECH
STKP 40	04-100690	PC 282	09-03-1998	24 x 40	50+20#	MODTECH
STKP 42	04-100929	PC 266	01-07-1999	24 x 40	50+20#	MODTECH
STKP 43	04-101555	PC 275	09-09-1999	24 x 40	50#	MODTECH
STKP 44	04-101602	PC 266	09-30-1999	24 x 40	50+20#	MODTECH
STKP 48	04-101768	PC 101268	12-16-1999	24 x 40	50#	MODTECH
STKP 51	04-102015	PC 101268	03-16-2000	24 x 40	50# /"50+20#	MODTECH
STKP 53	04-102365	PC 101288	07-06-2000	24 x 40	50+20#	MODTECH
STKP 53	04-102824	PC 101288	12-21-2000	24 x 40	50#	MODTECH
STKP 62	04-104169	PC 101268	04-18-2002	24 x 40	50+20#	MODTECH
STKP 67	04-104812	PC 101268	12-06-2002	24 x 40	50+20#	MODTECH
STKP 70	04-105299	PC 104601	06-22-2003	24 x 40	50+20#	MODTECH
STKP 75	04-110431	PC 04-105337	06-06-2003	24 x 40	50#	MODTECH
STKP 76	04-105455	PC 04-104796	07-17-2003	24 x 40	50#	MODTECH
STKP 78	04-109206	PC 106884	12-03-2007	24 x 40	50#	CURRENT/SIMI
STKP 107	65966	PC 266	06-24-1996	24 x 40	50#	MODTECH
STKP 109	66341	PC 275	05-20-1999	24 x 40	50#	MODTECH
STKP 110	04-100118	PC 04-100073	01-15-1998	24 x 40	50#	MSI
STKP 111	04-101984	PC 04-101419	03-09-2000	24 x 40	50#	MODTECH
STKP 112	04-104082	PC 04-101419	03-21-2002	24 x 40	50#	MODTECH
STKP 113	04-104310	PC 04-101419	06-02-2002	24 x 40	50#	MODTECH
STKP 114	04-105455	PC 04-104796	07-17-2003	24 x 40	50#	MODTECH
STKP 130	04-101827	PC 270	09-12-1999	24 x 40	50# /50+20#	MODTECH
STKP 131	04-104046	PC 04-101419	01-23-2003	24 x 40	50# /50+20#	MODTECH

BUILDING DATA - 36 x 40 RIGID FRAME

STKP #	DSA #	PC-BASE	DATE	SIZE	FLOOR LOAD	BLDG MFG
STKP 5W	57194	PC 79	11-08-1991	36 x 40	70#	MODTECH
STKP 32	66319	PC 266	11-12-1996	36 x 40	50+20#	MODTECH
STKP 34	67333	PC 266	03-11-1997	36 x 40	50+20#	MODTECH
STKP 46	04-101618	PC 101268	10-07-1999	36 x 40	50+20#	MODTECH
STKP 51	04-113121	PC 04-102015	06-12-2013	36 x 40	50+20#	MODTECH
STKP 57	04-103091	PC 101268	03-01-2001	36 x 40	50#	MODTECH
STKP 65	04-104441	PC 101288	07-11-2002	36 x 40	50+20#	MODTECH
STKP 71	04-106-419	PC 104801	07-30-2004	36 x 40	50+20#	MODTECH
STKP 73	04-108885	PC 101288	03-01-2007	36 x 40	100#	MODTECH
STKP 85	04-111101	PC 79	06-03-2010	36 x 40	50+20#	MODTECH
STKP 104	04-113588	A-58118	06-01-2014	36 x 40	50+20#	MODTECH

BUILDING DATA - 48 x 40 RIGID FRAME

STKP #	DSA #	PC-BASE	DATE	SIZE	FLOOR LOAD	BLDG MFG
STKP 5W	57194	PC 79	11-08-1991	48 x 40	100#	MODTECH
STKP 5W	57194	PC 79	11-08-1991	48 x 40	70#	MODTECH
STKP 17	63289	PC 243	05-04-1995	48 x 40	50+20#	MODTECH
STKP 41	04-100787	PC 266	10-22-1998	48 x 40	50+20#	MODTECH
STKP 45	04-101617	PC 101268	10-07-1999	48 x 40	50+20#	MODTECH
STKP 63	04-104170	PC 101268	04-18-2002	48 x 40	50+20#	MODTECH
STKP 96	04-113418	PC 79/57194	01-30-2014	48 x 40	50+20#	MODTECH
STKP 105	04-113544	PC 04-101288	04-10-2014	48 x 40	50+20#	MODTECH

REVISED 1/29/15

IDENTIFICATION STAMP DIV OF THE STATE ARCHITECT OFFICE OF REGULATION SERVICES
[redacted]
AC: FLS: SS:
DATE JAN 29 2015
ACS: D.FERGUSON
FLS: D.FERGUSON
SSS: EWJ

DATE SIGNED SEP 30 2014
REGISTERED PROFESSIONAL ENGINEER JAMES T. SIMPSON No. 3602 STRUCTURAL STATE OF CALIFORNIA
LICENSE EXPIRES 6-30-2016

IDENTIFICATION STAMP DIV OF THE STATE ARCHITECT
AC: 117350 FLS: SS: ACS
DATE 8-2-2016

PRE-CHECK (PC) DOCUMENT
CODE: 2013 CBC
A SEPARATE PROJECT APPLICATION FOR CONSTRUCTION IS REQUIRED

DATE SIGNED JAN 28 2015
REGISTERED PROFESSIONAL ENGINEER JAMES T. SIMPSON No. 3602 STRUCTURAL STATE OF CALIFORNIA
LICENSE EXPIRES 6-30-2016

IDENTIFICATION STAMP DIV. OF THE STATE ARCHITECT OFFICE OF REGULATION SERVICES
PC 04-113776
AC: FLS: SS:
DATE: OCT 08 2014
ACS: D.FERGUSON
FLS: D.FERGUSON
SSS: D.FERGUSON

IDENTIFICATION STAMP DIV. OF THE STATE ARCHITECT
113776
DATE

STOCKPILE CLASSROOM
RELOCATION FOUNDATION PLAN & DETAILS

© Class Leasing LLC. 2014

REVISIONS	BY
1 JAN 2015 ADD STKP 130/#131 & RE-STA SHEET NOTE & SHEET C1.0	CLS

CLASS LEASING LLC

Class Leasing, LLC
1221 Harley Knox Blvd. Perris, CA 92571-7408
VOICE (951)943-1908 FAX (951)943-5768

CLASS LEASING, LLC. PC
FOUNDATION PLANS AND DETAILS
STOCKPILE CLASSROOMS RELOCATION

DATE	09-29-2014
SCALE	
DRAWN	LAM-CLLS
JOB	
SHEET	F1.0

DATAPRINT CORP. 700 SO. CLARKSHOT ST. SAN MATEO, CA 94402
STOCKCRAFTING FORM NO. 101-04

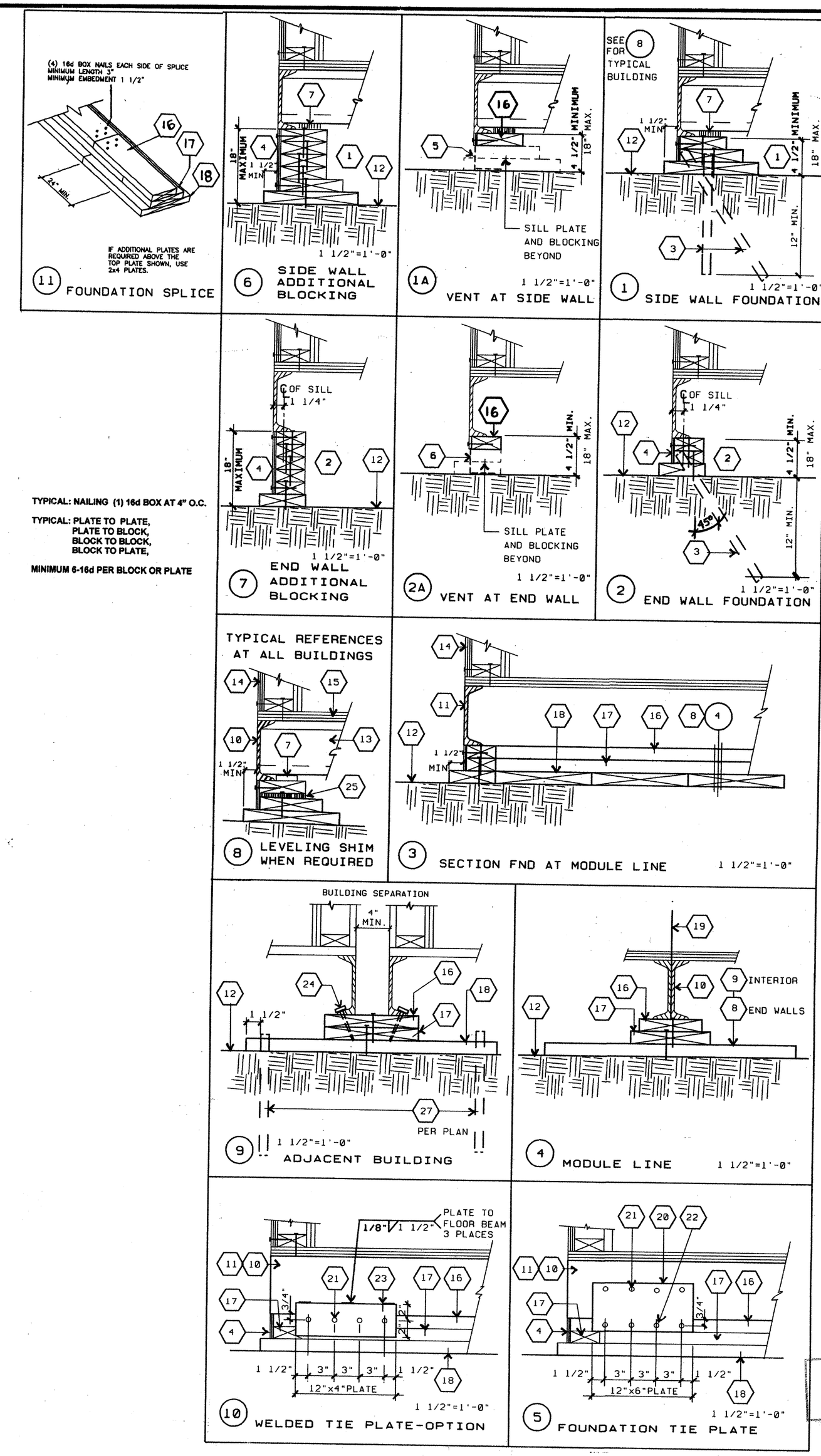

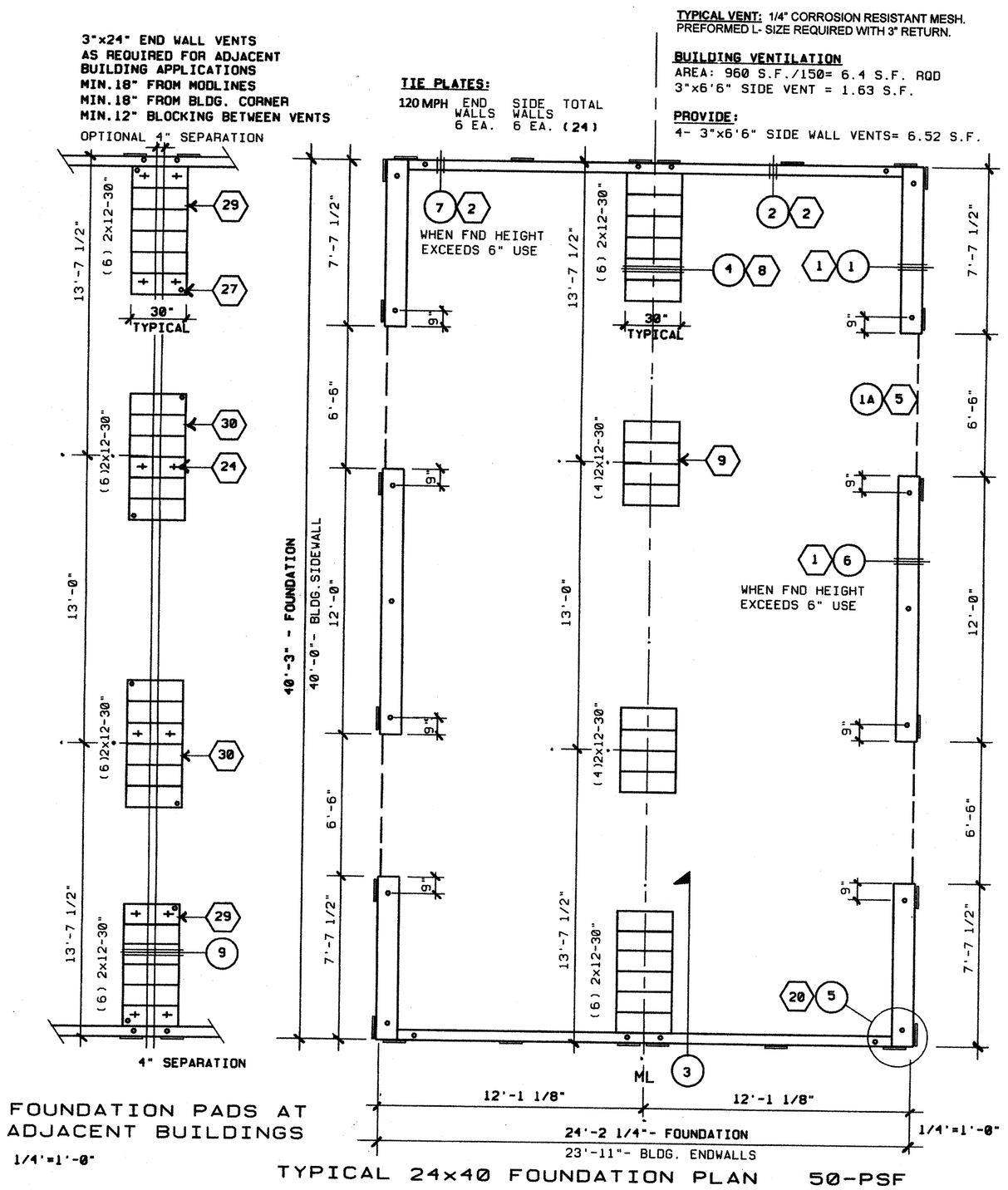

KEY NOTES 24x40- 50 PSF FLOOR LOAD

FOUNDATION AT SIDE WALL

1 **TOP PLATE:** 2x6 CONTINUOUS W/ (1) 16d NAIL AT 4" O.C. TO BLOCKING PLATE BELOW
BLOCKING: 2x6 CONTINUOUS W/ (1) 16d NAIL AT 4" O.C. TO BLOCKING OR SILL PLATE BELOW
SILL PLATE: 2x12 (PT) WITH SILL RESTRAINT PER GENERAL NOTE #A.

FOUNDATION AT END WALL

2 **TOP PLATE:** 2x4 CONTINUOUS W/ (1) 16d NAIL AT 4" O.C. TO BLOCKING PLATE BELOW
BLOCKING: 2x4 CONTINUOUS W/ (1) 16d NAIL AT 4" O.C. TO BLOCKING OR SILL PLATE BELOW
SILL PLATE: 2x6 (PT) WITH SILL RESTRAINT PER GENERAL NOTE #A.

3 SILL RESTRAINT- PIPE TO GRADE (TYP) SEE GENERAL NOTE #A

4 SKIRTING: 3/8" PLYWOOD, ATTACH WITH 10d NAILS, EDGE NAILING 4" O.C. AT END WALLS AND 6" O.C. AT SIDE WALLS, FIELD NAILING 12" OC

5 SIDEWALL VENT: 3" HIGH BY 6'-6" LONG. INSTALL UNDER SKIRTING. SKIRTING ATTACH WITH 10d NAILS, EDGE NAILING 6" O.C.,

6 ENDWALL VENT: 3" HIGH BY 2'-0" LONG. INSTALL UNDER SKIRTING. SKIRTING ATTACH WITH 10d NAILS, EDGE NAILING 4" O.C.

7 SHIM: 5/8" X 2 1/2" WHEN REQUIRED

FOUNDATION AT MOD LINE / END WALL

8 **TOP PLATE:** 2x8 CONTINUOUS W/ (1) 16d NAIL AT 4" O.C. TO BLOCKING PLATE BELOW
BLOCKING: 2x10 CONTINUOUS W/ (1) 16d NAIL AT 4" O.C. TO BLOCKING OR SILL PLATE BELOW
SILL PLATE: (6) 2x12x30" (PT)

FOUNDATION AT MOD LINE / INTERIOR WALL

9 **TOP PLATE:** 2x8 CONTINUOUS W/ (1) 16d NAIL AT 4" O.C. TO BLOCKING PLATE BELOW
BLOCKING: 2x10 CONTINUOUS W/ (1) 16d NAIL AT 4" O.C. TO BLOCKING OR SILL PLATE BELOW
SILL PLATE: (4) 2x12x30" (PT)

10 FLOOR BEAM: C7x 9.8 TYPICAL

11 FLOOR HEADER: C7x 9.8 TYPICAL

12 FINISH GRADE

13 FLOOR JOIST

14 EXTERIOR FINISH

15 PLYWOOD SUB-FLOOR

16 TOP PLATE: CONTINUOUS

17 BLOCKING

18 SILL PLATE

19 MODLINE

20 TIE PLATE: 12" x 6" x 10 GA

21 PLATE ANCHOR: 4 -1/4" ϕ S.M.S. (1 1/2" MIN. EMBEDMENT)

22 PLATE ANCHOR: 4 -1/4" x 2" LONG LAG SCREWS (1 1/2" MIN. EMBEDMENT)

23 TIE PLATE: 12" x 4" x 10 GA

24 BUILDING ANCHORAGE: 6- 5/8" x 4" LAG SCREWS AT EACH BUILDING (FOR LOCATION SEE PLAN AT ADJACENT BUILDINGS)

25 LOCATION OF SHIM PLATES WHERE REQUIRED FOR LEVELING USE 1/4", 1/2" OR 3/4" PLYWOOD AT SAME WIDTH AS PLATE. NAIL SHIM TO PLATE WITH (6) 10d BOX.

26 2" CUT OUT OF SILL PLATE FOR DRAINAGE. FIELD TO LOCATE AT LOWEST CORNER OF FOUNDATION.

27 1" PIPE EACH END OF PAD AT ADJACENT BUILDING LINE.

28 THIS VENT TO BE LOCATED UNDER LANDING. PROVIDE EQUAL AREA SCREENED VENTILATION IN LANDING SKIRT.

FOUNDATION AT BUILDING SEPARATION / END WALL

29 **TOP PLATE:** 2x12 CONTINUOUS W/ (1) 16d NAIL AT 4" O.C. TO BLOCKING PLATE BELOW
BLOCKING: 2x12 CONTINUOUS W/ (1) 16d NAIL AT 4" O.C. TO BLOCKING OR SILL PLATE BELOW
SILL PLATE: (6) 2x12x30" (PT) WITH SILL RESTRAINT PER PLAN AND NOTE 25.

FOUNDATION AT BUILDING SEPARATION / INTERIOR WALL

30 **TOP PLATE:** 2x12 CONTINUOUS W/ (1) 16d NAIL AT 4" O.C. TO BLOCKING PLATE BELOW
BLOCKING: 2x12 CONTINUOUS W/ (1) 16d NAIL AT 4" O.C. TO BLOCKING OR SILL PLATE BELOW
SILL PLATE: (6) 2x12x30" (PT) WITH SILL RESTRAINT PER PLAN AND NOTE 25.

GENERAL NOTES

A. **SILL RESTRAINT**: THE FOUNDATION SHALL BE DESIGNED TO PREVENT SLIDING ON THE SUPPORTING SURFACE (ASPHALT CONCRETE PAVING OR ON SOIL OR ON PRE-DRILLED CONCRETE SLAB ON GRADE) BY ATTACHING THE WOOD FOUNDATION PLATES FOR THE BUILDING, RAMPS AND STAIRS TO THE GROUND WITH RESTRAINING DEVICES.

USE A ONE-INCH DIAMETER STANDARD WEIGHT (1.315" ACTUAL O.D.) HOT DIPPED GALVANIZED PIPE OR ONE-INCH DIAMETER SOLID STEEL ROD SPACED AT NOT MORE THAN 10'-0". ONE PIPE/ROD SHALL BE LOCATED A MAXIMUM OF TWO FEET FROM EACH CORNER IN BOTH DIRECTIONS AND A MINIMUM OF TWO PIPES/RODS PER DISCONTINUOUS FOUNDATION STRIP.

PIPES TO PENETRATE INTO SOIL AND OR PAVING A MINIMUM OF 12" MEASURED VERTICALLY. 18-1/2" LONG PIPE REQUIRED FOR PENETRATION AT A 45 DEGREE ANGLE.

B. TO PREVENT WATER FROM PONDING BENEATH THE STRUCTURE VERIFY DRAINAGE WITH DISTRICT ARCHITECT SITE PLANS.

C. A **WOOD SILL (FOOTING) PLATE** SHALL BE PRESSURE TREATED HEM FIR OR DOUG FIR AND MAY BEAR DIRECTLY ON SOIL OR PAVED SURFACE. GRASS OR TURF SHALL BE CLEARED TO BARE SOIL UNDER THE ENTIRE AREA OF THE BUILDING (BY DISTRICT). THE WOOD SILL (FOOTING) PLATE MAY SUPPORT WOOD CRIPPLE STUDS, POSTS OR CONTINUOUS BLOCKING AND SHEATHING (SKIRT) WHICH NEED NOT BE TREATED. FOUNDATION LUMBER TO BE PRECUT AT FACTORY, LUMBER AND PRESSURE TREATING TO BE VERIFIED BY THE INSPECTOR

D. **FOUNDATION DESIGNED FOR 1000 PSF SOIL BEARING PRESSURE**

E. THIS FOUNDATION PLAN HAS 1/4" ADDED AT EACH MODLINE AND 1/8" AT EACH SIDE WALL AND DOES NOT MATCH THE FLOOR PLAN DIMENSIONS, THIS IS REQUIRED FOR GROWTH THAT IS EXPERIENCED WHEN SETTING MULTIPLE MODULE BUILDINGS.

F. MACHINE APPLIED 16d FASTENERS SHALL HAVE AN EMBEDMENT OF NOT LESS THAN 1 1/2" INTO SECOND MEMBER, AND SHALL BE NOT LESS THAN 3 1/2" IN OVERALL LENGTH

G. THE ABOVE NAILS SHALL ALSO BE ACCEPTABLE FOR HAND NAILING PROVIDED THE REQUIRED EMBEDMENT IS MAINTAINED.

PRE-CHECK (PC) DOCUMENT
CODE: 2013 CBC
A SEPARA. □ PROJECT APPLICATION FOR CONSTRUCTION IS REQUIRED

DATE SIGNED SEP 30 2014

REGISTERED PROFESSIONAL ENGINEER JAMES T. SIMPSON No. 3602 STRUCTURAL STATE OF CALIFORNIA

IDENTIFICATION STAMP DIV. OF THE STATE ARCHITECT
03 17350
AC. FLS. SS.
DATE 8-3-2016
LICENSE EXPIRES 6-30-2016

IDENTIFICATION STAMP DIV. OF THE STATE ARCHITECT OFFICE OF REGULATION SERVICES
[redacted]
AC. FLS. SS.
DATE: OCT 0 8 2014

24x40 - 50 PSF STOCKPILE CLASSROOM RELOCATION FOUNDATION PLAN & DETAILS

REVISIONS	BY

CLASS LEASING LLC

Class Leasing, LLC
1221 Harley Knox Blvd. Perris, CA 92571-7408
VOICE (951)943-1908 FAX (951)943-5768

CLASS LEASING, INC.
STOCKPILE CLASSROOM
24x40 - 50 PSF RELOCATION
FOUNDATION PLAN & DETAILS

DATE	09-29-2014
SCALE	
DRAWN	LAM-CLLS
JOB	24x40 50 PSF
SHEET	F2.0

© Class Leasing LLC. 2014

DUTYPRINT CORP. 700 SO. CLARKSON ST. SAN MATEO, CA. 94402
STOCKDRAFTING FORM NO. 101-04

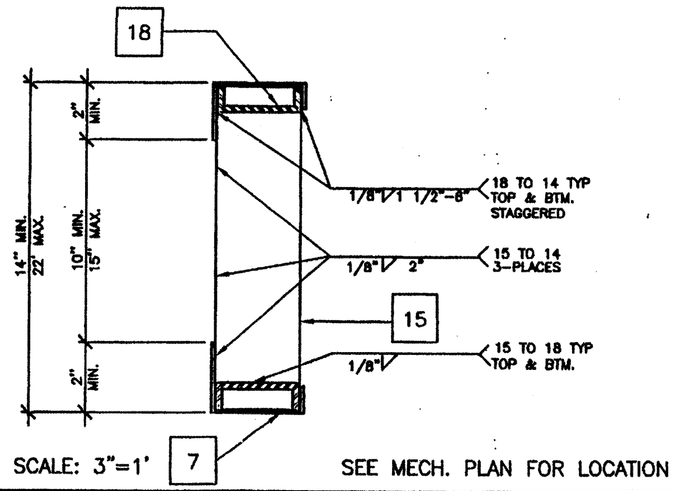

SCALE: 3"=1'

SEE MECH. PLAN FOR LOCATION

MECH. DUCT OPENING IN ROOF BM. 8

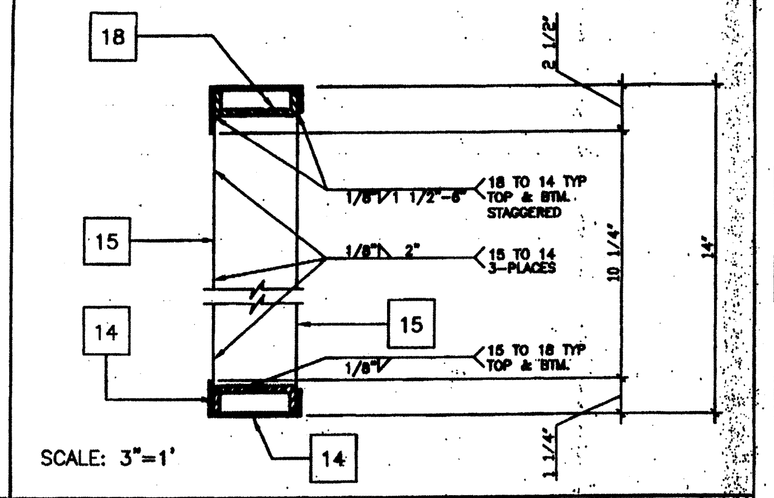

SCALE: 3"=1'

MECH. DUCT OPENING IN HEADER 4

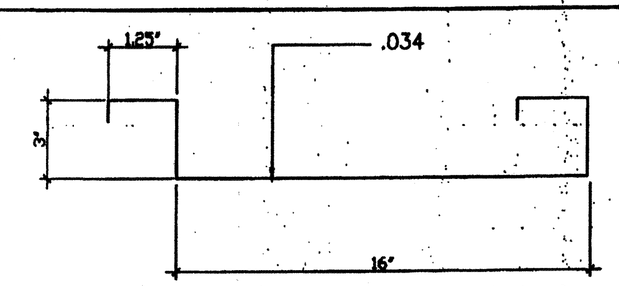

Sx(MIN) = 0.296 IN3 Sx(MAX) = 0.33 IN3
Ix(MIN) = 0.446 IN4 Ix(MAX) = 0.603 IN4

SCALE: NTS

ROOF PAN (22GA.) 5

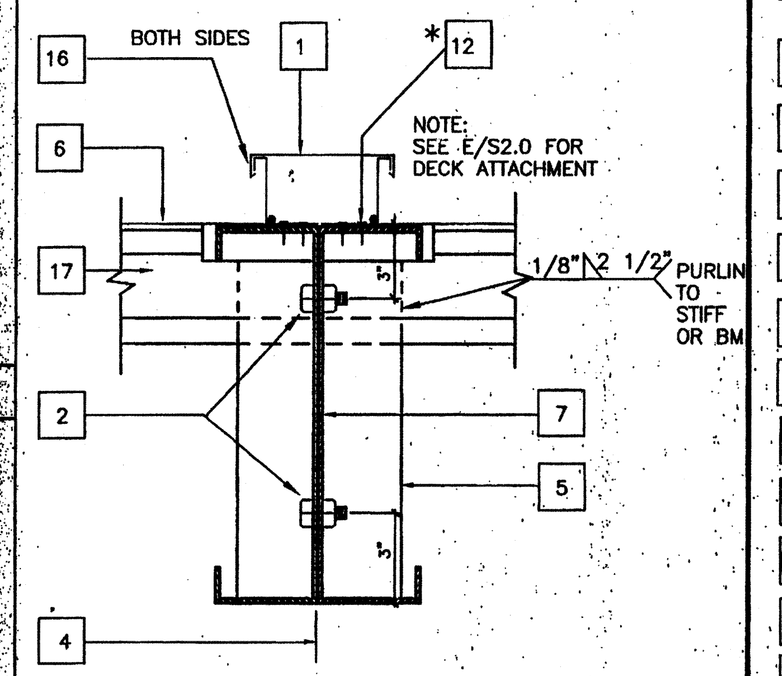

SEE 9/S2.2 FOR TYP. WELD STIFFENER TO BEAM

*DO NOT PENETRATE METAL ROOF DECK

SCALE: 3"=1'

ROOFING • MODLINE 1

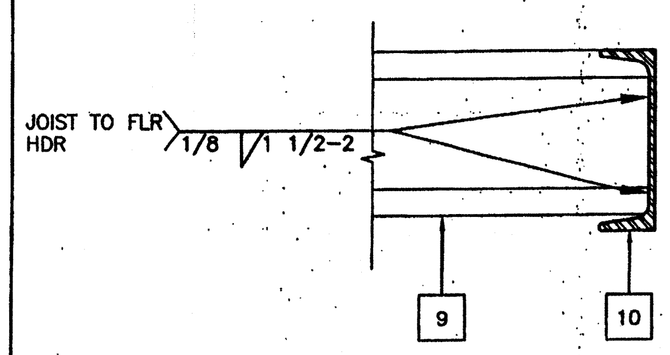

SCALE: 3"=1'

FLOOR FRAME/JOIST TO BEAM 6

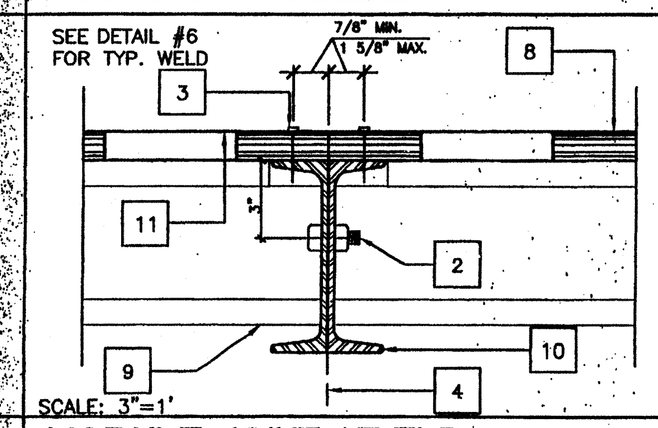

SCALE: 3"=1'

MODULE JOINT AT FLR. 12'-0" 2

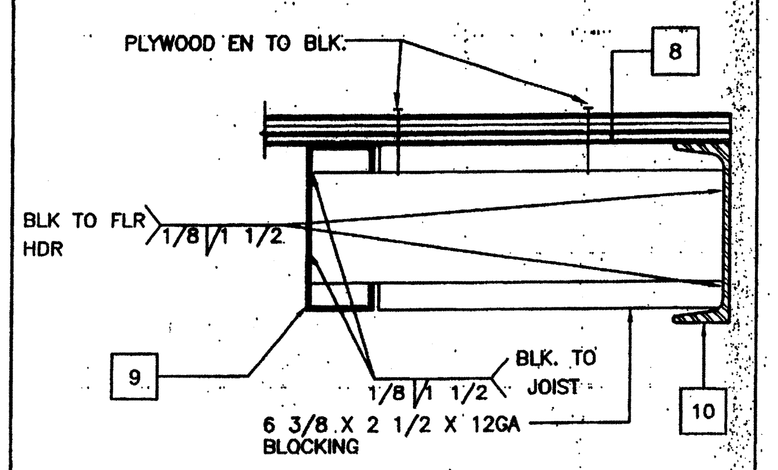

SCALE: 3"=1'

BLOCK AT MIDSPAN 10

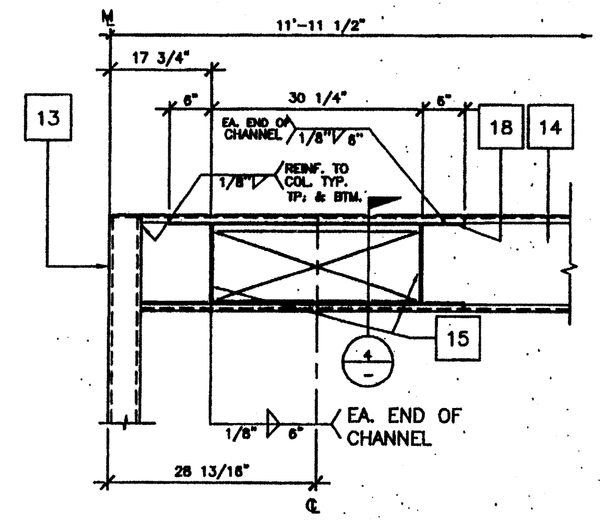

SCALE: 1"=1'

ELEVATION-OPENING 7 3

KEY NOTES

1. CAP CLOSURE AT RIDGE 26GA. GALV. W/#10 TYPE FASTENERS W/NEOPRENE WASHERS TO RIB BOTH SIDES OF MODLINE. SET CAP IN SEALANT. BOTH SIDES.
2. 5/8" M.B. A307 MODULE JOINT (SEE STRUCTURAL PLAN FOR LOCATION) AT 8" O.C.
3. E.N.
4. MODULE JOINT
5. 14" THK X 3" FULL DEPTH STIFFENER PLATE AT RIDGE ONLY (SEE 9/S2.2)
6. STANDING ROOF SEAM (SEE A2.0)
7. ROOF BEAM SEE 1/S2.2 & 7/S2.2
8. PLYWOOD FLOOR SHEATHING
9. FLOOR JOIST SEE 6/S2.2
10. FLOOR BEAM SEE 5/S2.2
11. HAND HOLE AT BOLT LOCATION
12. #14 STSMS.
13. 3 1/2"X3 1/2"X1/4" STEEL TUBE COLUMN. SEE 12/S2.2
14. ROOF HEADER SEE 3/S2.2
15. 1/4" STIFFENER PLATE SEE 9/S2.2 FOR TYP. WELD
16. SEALANT
17. ROOF PURLIN SEE 2/S2.2
18. 3 1/4" X 1" X 45 11/16" LG X 10GA CHANNEL TOP AND BOTTOM OF OPENING

IDENTIFICATION STAMP DIV. OF THE STATE ARCHITECT OFFICE OF REGULATION SERVICES 04 [redacted] AC 1 FLS 1 SS 116 DATE JUL 17 2003

04 [redacted] JUL 10 2003

IDENTIFICATION STAMP DIV. OF THE STATE ARCHITECT 03 # 117350 AC 1 FLS 1 SS 630 DATE 8-27-2016

FILE PATH:

PROJECT NO. 4736

REVISIONS	Electrical Engineer's Seal	Mechanical Engineer's Seal	PC Professional of Record Seal	Architects Seal
1				
2				
3				
4				
5				

PC CBC 01 IDENTIFICATION STAMP DIV. OF THE STATE ARCHITECT OFFICE OF REGULATION SERVICES 04 AC FLS SS DATE

MODTECH™ INC.
2830 BARRETT AVENUE FAX (909) 943-4014
PERRIS, CALIF. 92572 FAX (909) 940-0427

PROJECT NUMBER: 4736
WILLIAM SCOTTSMAN

© MODTECH, INC. 2002 ALL RIGHTS RESERVED

DRAWN BY: GL
DATE: 07/07/03
CHECKED BY:
DATE:

MODTECH Index No.

STRUCTURAL DETAILS

S1.2

ELECTRICAL PANEL SCHEDULE

MAIN: 100 AMP 12 POLE | PANEL: A | LOCATION: REAR/INTERIOR | FEED: REAR | MOUNTING: FLUSH

LOAD	WATTS Aø	WATTS Bø	BREAKER Amps	P	CKT	A	B	CKT	P	BREAKER Amps	WATTS Aø	WATTS Bø	LOAD
RECEPTACLE	720		20	1	1			2	2	60	7080		HVAC (3 1/2T)
RECEPTACLE/CLOCK		720	20	1	3			4	–	–		7080	HVAC (3 1/2T)
					5			6					
					7			8					
INT/EXT LIGHTS	900		20	1	9			10					
INT. LIGHTS		840	20	1	11			12	–	–		40	FIRE ALARM (DEDICATED)
WATTS/PHASE A = 8700	1620	1560									7080	7120	B = 8680 WATTS/PHASE
TOTAL 17380 WATTS	72		AMPS		120/240			VOLTS			SINGLE ø		THREE WIRE

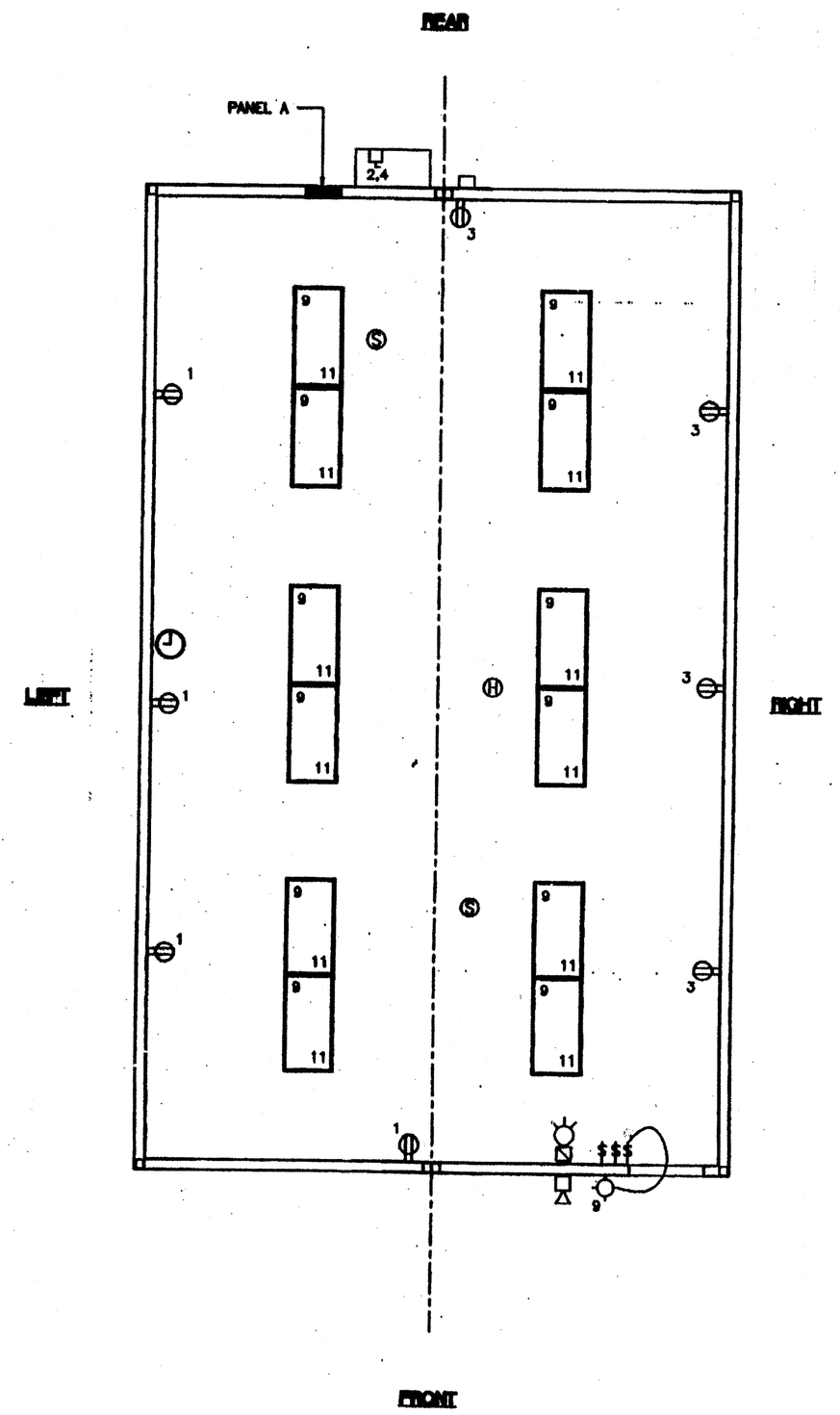

ELECTRICAL PLAN (24'x40')
OPP-HAND
SCALE: 1/4" = 1'-0"

GENERAL GROUNDING NOTES

1. EACH BUILDING SHALL BE SEPARATELY GROUNDED WITH A 3/4" RD. X 8' COPPERCLAD STEEL GROUND ROD. WHERE ROCK BOTTOM IS ENCOUNTERED, ROD SHALL BE DRIVEN AT AN ANGLE NOT TO EXCEED 45 DEGREE'S FROM THE VERTICAL OR SHALL BE BURIED IN A TRENCH THAT IS AT LEAST 30" DEEP (BY SITE ELECTRICAL)
2. TESTING: TEST FOR RESISTANCE TO GROUND. IF RESISTANCE EXCEEDS 25 OHMS, INSTALL ADDITIONAL GROUND RODS SEPARATED AT LEAST 6'-0" UNTIL RESISTANCE IS REDUCED TO 25 OHMS OR LESS. (BY SITE ELECTRICAL)
3. APPROVAL OF THIS PLAN DOES NOT CONSTITUTE APPROVAL OF THIS FIRE ALARM FOR ALL SITES. THE FIRE ALARM SYSTEM AND/OR COMPONENTS MAYBE REQUIRED TO BE CHANGED DUE TO SITE LOCATION, EXISTING CONDITIONS OR INCOMPATIBLE COMPONENTS.
4. GROUND MG TEST SHALL BE DONE IN THE PRESENCE OF THE PROJECT INSPECTOR. ALL GROUNDING SHALL BE IN ACCORDANCE WITH CEC ARTICLE 250.

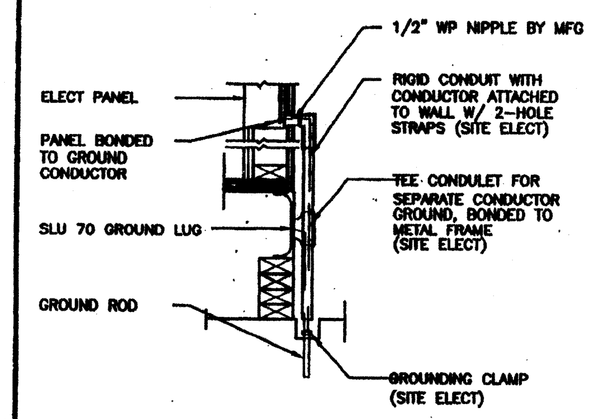

TYP GROUNDING DETAIL 1

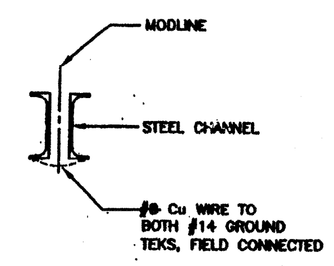

GROUND JUMPER • MOD LINE 2

ELECTRICAL LEGEND

- 2'x4' T8 LIGHTS W/ELECT. BALLAST [redacted]
- EXTERIOR LIGHT FIXTURE AT +93" AFF [redacted]
- SWITCH AT +48" AFF
- [redacted] SWITCH AT +48" AFF FOR EXT. LIGHT [redacted]
- DUPLEX WALL RECEPTACLE 15A 125V 3-WIRE AT +18" AFF UON
- HVAC UNIT (HV)
- 4SD J-BOX FOR FIRE ALARM PULL STATION AT +48" AFF, 3/4" CO TO OR . PULLSTRING
- 4SD J-BOX FOR FIRE ALARM STROBE/HORN AT +80" TO TO BOTTOM OF DEVICE AFF. 3/4" CO TO PULLSTRING.
- 4SD J-BOX FOR FIRE ALARM HORN AT +96" AFF 3/4" CO TO . PULLSTRING
- WEATHER PROOF GUTTER BOX (8"x8"x4") AT +18" AFF RECEIVE 3/4" CO FROM FA DEVICE, PULLSTRING
- ELECTRICAL PANEL AT +80" AFF TO CENTERLINE 1 1/4" POWER NIPPLE POC, GND JUMPER BY SITE ELECT
- CLOCK AT +90" AFF
- 4SD J-BOX FOR HEAT DETECTOR (ATTIC) * MAX 25' FROM ANY WALL AND 50' BETWEEN THEM.
- 4SD J-BOX FOR SMOKE DETECTOR (CEILING) * MAX 15' FROM ANY WALL AND 30' BETWEEN THEM.
- 2 GANG J-BOX AT 18" w/ CONDUIT STUBBED UP TO ATTIC SPACE.

NOTES

1. SCHOOL EQUIPMENT ANCHORAGE

THE FOLLOWING IS FOR THE ARCHITECTS INFORMATION ONLY:

THE SEISMIC ANCHORAGE OF ELECTRICAL EQUIPMENT SHALL CONFORM TO CCR TITLE 24, SECTION 1632A AND TABLE 16A-O. ANCHORAGE DETAILS FOR ROOF/FLOOR MOUNTED EQUIPMENT WEIGHING LESS THAN 400 LBS & HUNG EQUIPMENT WEIGHING LESS THAN 20 LBS MAY BE OMITTED FROM THE PLANS.

FOR ELECTRICAL DRAWINGS:

ALL ELECTRICAL EQUIPMENT SHALL BE BRACED OR ANCHORED TO RESIST A HORIZONTAL FORCE ACTING IN ANY DIRECTION USING THE FOLLOWING CRITERIA:

EQUIPMENT ON GRADE	33% OF OPERATING WEIGHT
EQUIPMENT ON STRUCTURE	40% OF OPERATING WEIGHT

FOR FLEXIBLY MOUNTED EQUIPMENT USE 4 TIMES THE ABOVE VALUES, AND FOR SIMULTANEOUS VERTICAL FORCE USE 1/3 TIMES THE HORIZONTAL FORCE.

THE ABOVE VALUES ARE FOR AN IMPORTANCE FACTOR, I = 1.0 AND SEISMIC ZONE, Z = 4

WHERE ANCHORAGE DETAILS ARE NOT SHOWN ON THE DRAWINGS THE FIELD INSTALLATION SHALL BE SUBJECT TO THE APPROVAL OF THE ARCHITECT AND THE FIELD ENGINEER OF THE OFFICE OF THE STATE ARCHITECT.

IDENTIFICATION STAMP
DIV. OF THE STATE ARCHITECT
OFFICE OF REGULATION SERVICES
[redacted]
AC FLS SS
DATE JUL 17 2003

04 10 34
JUL 20 2003
DIV OF THE STATE ARCHITECT
03 17550
AC FLS
DATE 8-27-2016

FILE PATH:

PROJECT NO. 4736

PC-04-104796

REVISIONS
1
2
3
4
5

Electrical Engineer's Seal

Mechanical Engineer's Seal

PC Professional of Record Seal
LICENSED ARCHITECT
FREDERICK HALLOCK
No. C-18886
12/31/03
RENEWAL DATE
STATE OF CALIFORNIA

Architects Seal

PC
CBC 01
IDENTIFICATION STAMP
DIV. OF THE STATE ARCHITECT
OFFICE OF REGULATION SERVICES
PC-04
104796
AC FLS NO SS
DATE 5/2/03

MODTECH INC.
2830 BARRETT AVENUE FAX (909) 943-4014
PERRIS, CALIF. 92572 FAX (909) 940-0427

PROJECT NUMBER: 4736
WILLIAM SCOTTSMAN

© MODTECH, INC. 2002
ALL RIGHTS RESERVED

DRAWN BY: GL
DATE: 07/07/03
CHECKED BY:
DATE:

ELECTRICAL PLAN W/O DATA

MODTECH Index No.
E1.03

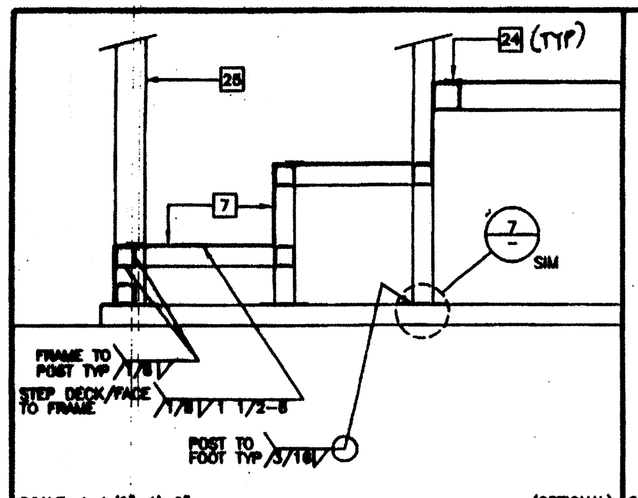

SCALE: 1 1/2"=1'-0" (OPTIONAL)

STAIR SECTION 16

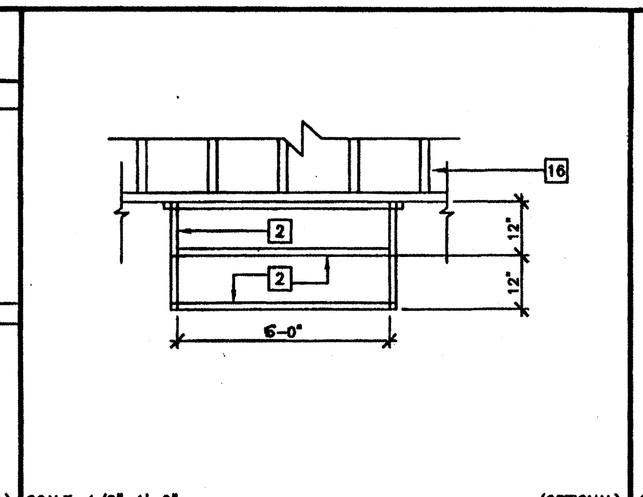

SCALE: 1/2"=1'-0" (OPTIONAL)

STAIR FRAMING PLAN 12

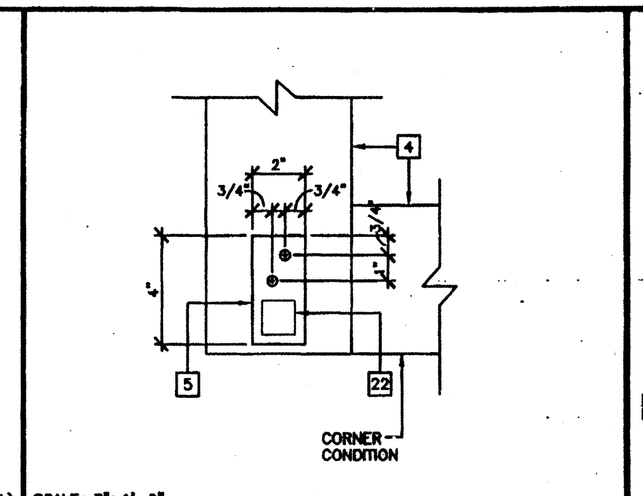

SCALE: 3"=1'-0"

ADJUSTABLE LEG BASE PLATE 8

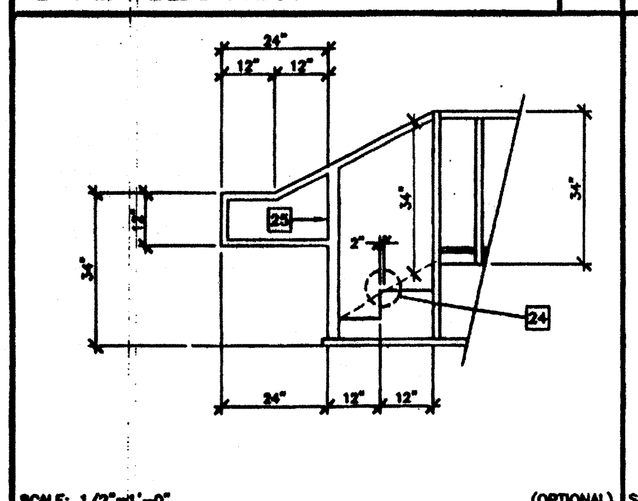

SCALE: 1/2"=1'-0" (OPTIONAL)

STAIR ELEVATION 17

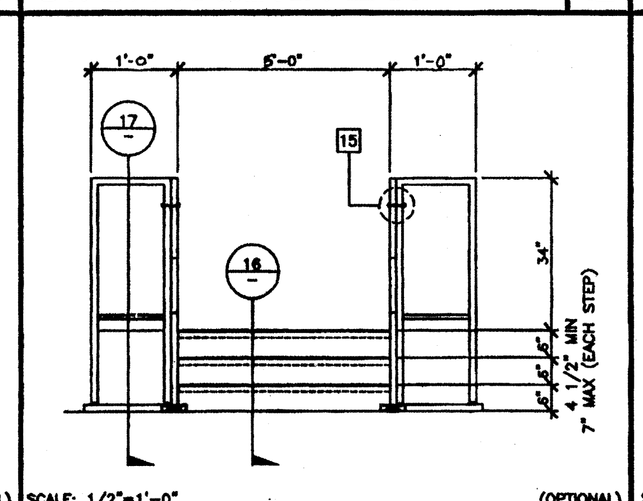

SCALE: 1/2"=1'-0" (OPTIONAL)

STAIR ELEVATION 13

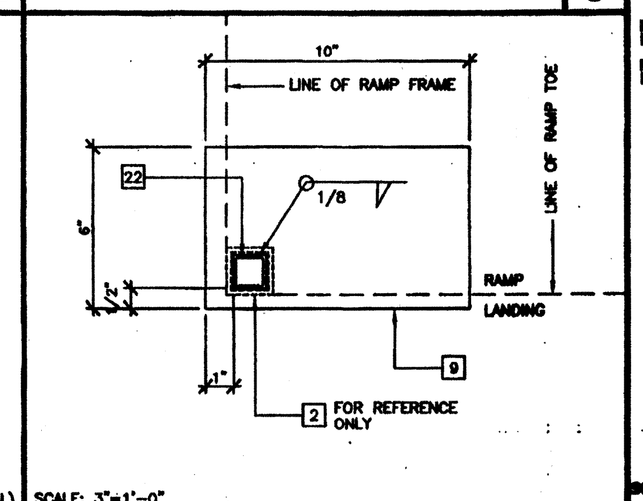

SCALE: 3"=1'-0"

BASE PLATE AT RAMP TOE 9

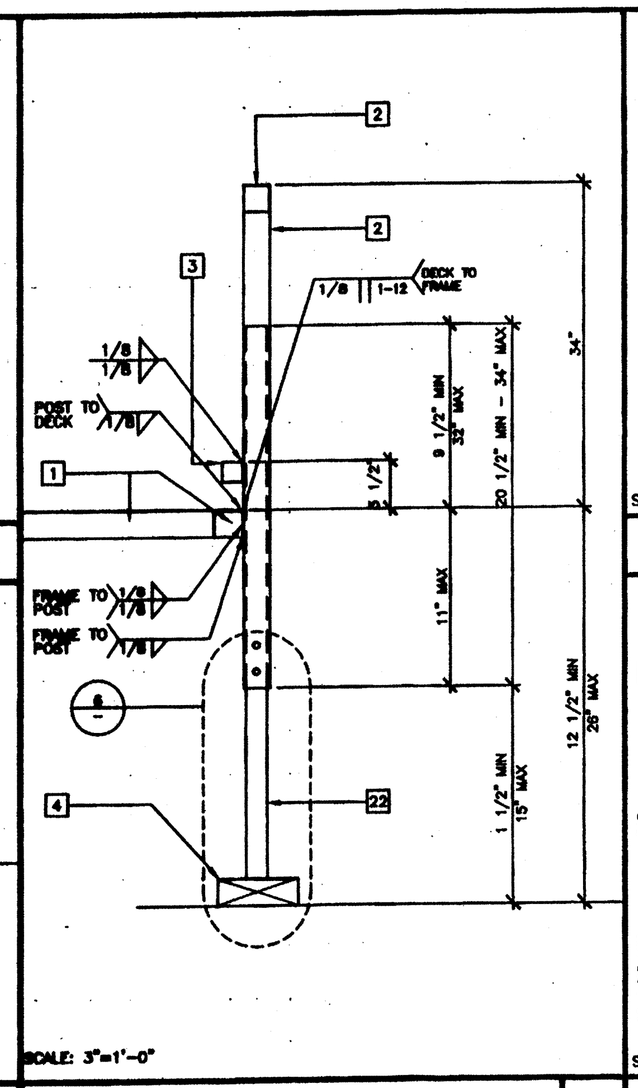

SCALE: 3"=1'-0"

ADJUSTABLE LEG 5

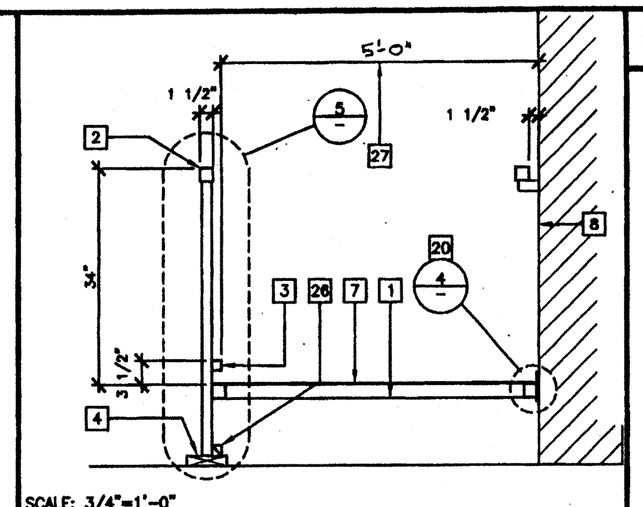

SCALE: 3/4"=1'-0"

SECTION AT RAMP 1

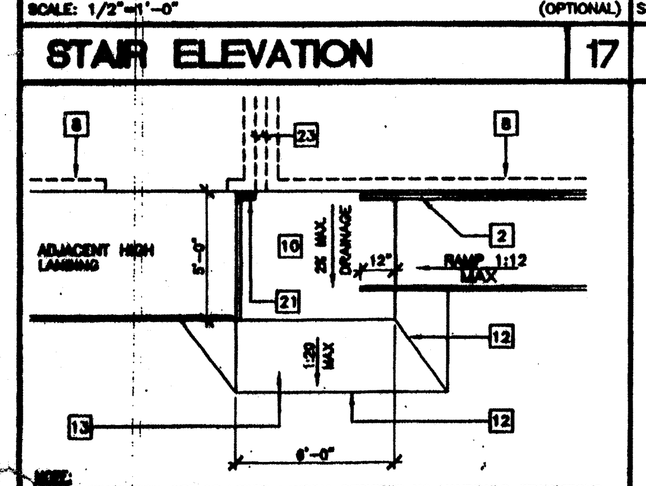

NOTE:
1:20 TRANSITION OFF OF LOWER LANDING REQUIRES NO HANDRAILS. TRANSITIONS EXCEEDING 1:20 BUT NOT TO EXCEED 1:12 REQUIRE REMOVAL OF 12" HANDRAIL EXTENSION AND ADDITIONAL HANDRAILING BY DISTRICT

SCALE: NTS (BY DISTRICT)

RAMP TRANSITION 18

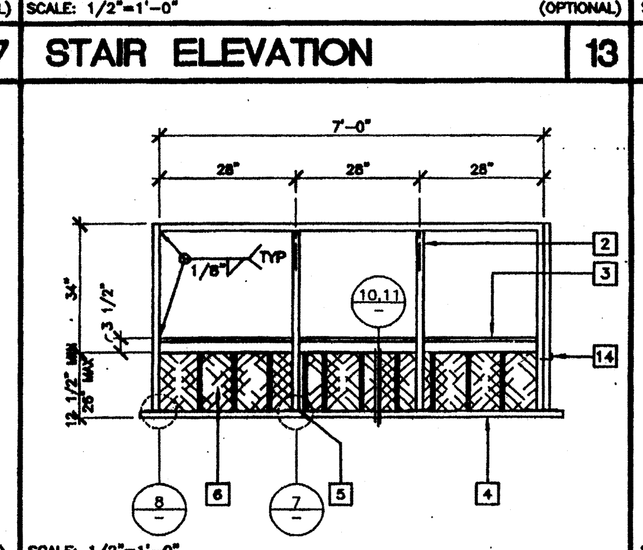

SCALE: 1/2"=1'-0"

LANDING ELEVATION 14

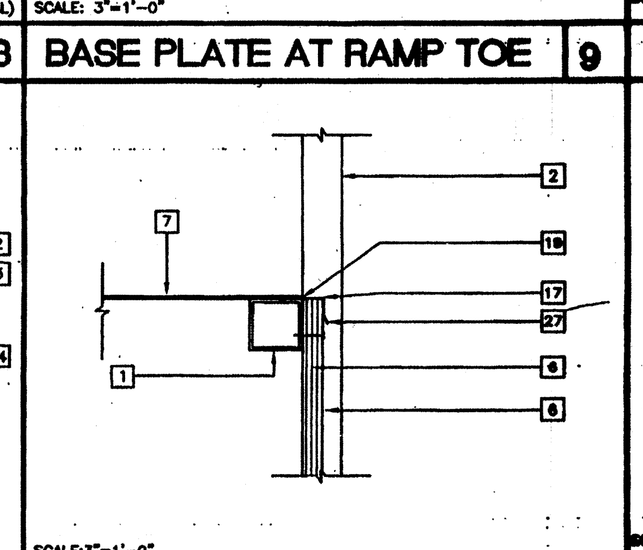

SCALE:3"=1'-0"

SKIRT FLASHING 10

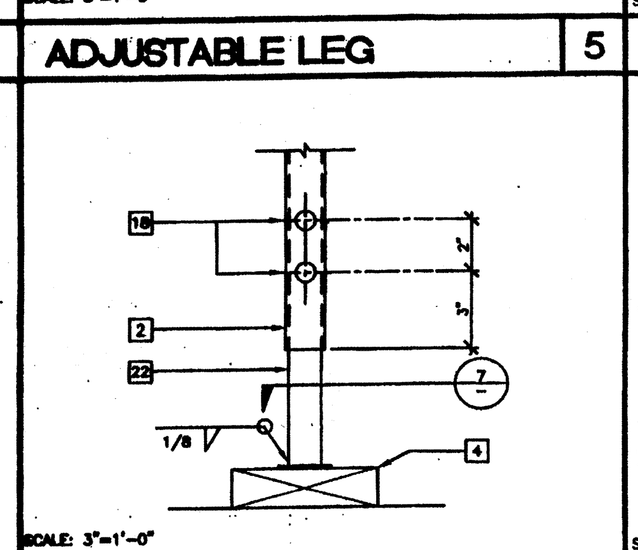

SCALE: 3"=1'-0"

ADJUSTABLE LEG 6

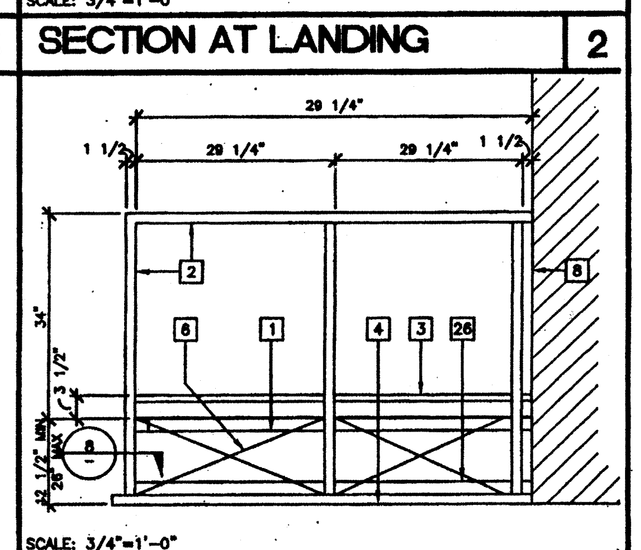

SCALE: 3/4"=1'-0"

END ELEVATION 3

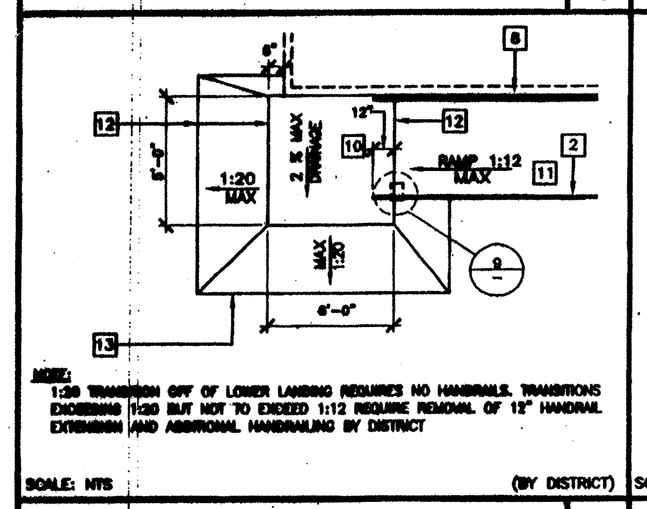

NOTE:
1:20 TRANSITION OFF OF LOWER LANDING REQUIRES NO HANDRAILS. TRANSITIONS EXCEEDING 1:20 BUT NOT TO EXCEED 1:12 REQUIRE REMOVAL OF 12" HANDRAIL EXTENSION AND ADDITIONAL HANDRAILING BY DISTRICT

SCALE: NTS (BY DISTRICT)

RAMP TRANSITION 19

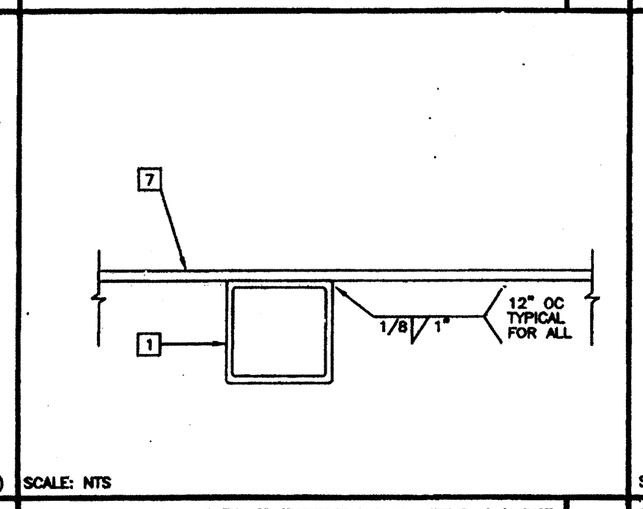

SCALE: NTS

SECTION AT INTERIOR FRAME 15

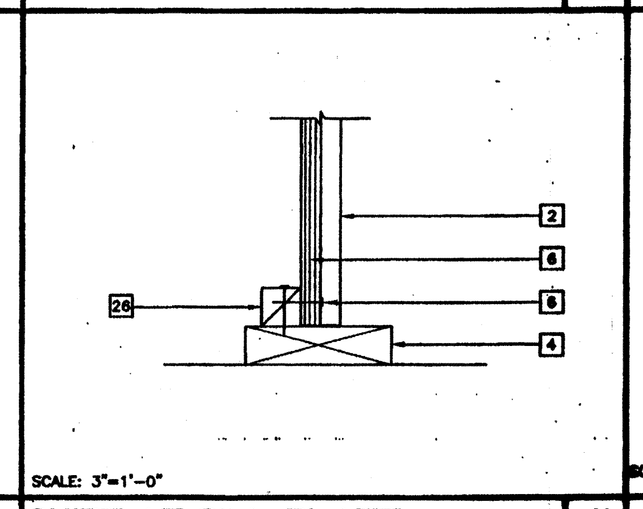

SCALE: 3"=1'-0"

SKIRT AT SILL PLATE 11

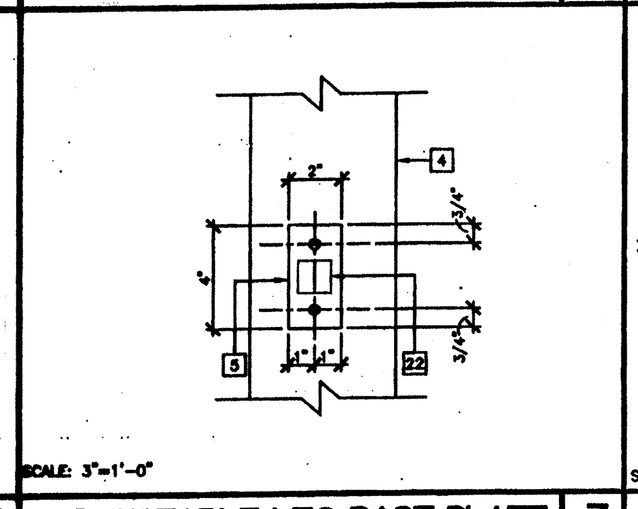

SCALE: 3"=1'-0"

ADJUSTABLE LEG BASE PLATE 7

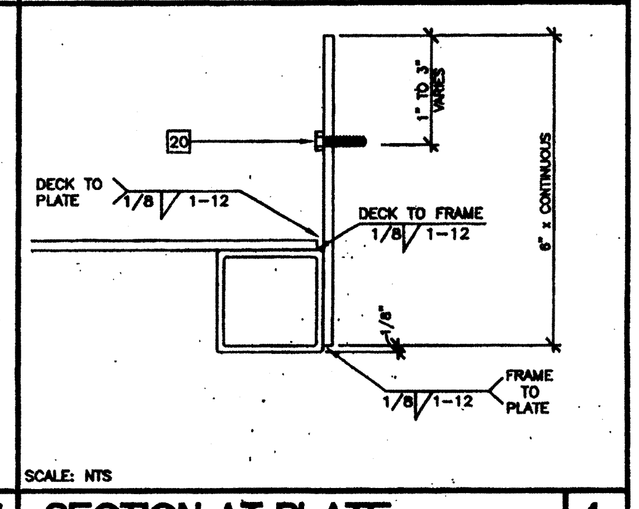

SCALE: NTS

SECTION AT PLATE 4

KEY NOTES

1. TS 2"x2"x14 GA
2. TS 1 1/2"x1 1/2"x14 GA (Fy = 39 KSI). ROUNDED OR BEVELED AT CORNERS.
3. TS 1"x1"x16 GA WHEELCHAIR GUIDE
4. 2"x6" PRESSURE TREATED SILL PLATE
5. 2"x4"x12 GA BASE PLATE WITH 2-1/4"x1" LAGS
6. SKIRTING: PLYWOOD TO MATCH BUILDING SIDING. BLOCK ALL EDGES. ATTACH WITH 8d AT 6" OC EDGES AND 12" OC FIELD. AT EDGE CONNECTION TO TS. USE #14x2" TEK SCREWS AT 6" OC
7. 12GA METAL DECK: NON-SLIP SURFACE. DESIGN COEFFICIENT OF FRICTION GREATER THAN 65%. MAINTAINABLE FOR 1 YR. PROVIDE ROUNDED OR BEVELED EDGES ON STAIR NOSING.
8. EXISTING BUILDING.
9. 6"x10"x12 GA BASE PLATE AT RAMP TOE.
10. LOWER LANDING BY DISTRICT
11. RAMP BY MODTECH
12. FLUSH TRANSITION
13. PAVE BY DISTRICT
14. 3"x1"x3'-0"x10 GA BENT PLATE
15. FASTEN POSTS WITH 3/8" DIA THRU BOLT, TYPICAL
16. RAMP LANDING, TYPICAL
17. 26 GA FLASHING
18. 3/8" DIAx2" LONG MB WITH NUT & WASHERS
19. CAULKING
20. 6"x10GA CONTINUOUS PLATE WITH #14x2" TEK SCREWS AT 9" OC INTO WOOD OR FOUNDATION BLOCKS OR #14x2" TEK SCREWS INTO METAL AT 9" OC
21. PROVIDE DIVERSION FOR WATER FROM DOWNSPOUT FOR THIS CONDITION. BY DISTRICT
22. TS 1 1/4"x1 1/4"x14 GA (Fy = 39 KSI)
23. 4" MINIMUM BUILDING SEPARATION
24. 2" SLIP RESISTANT WARNING STRIPES MAX 1" FROM EVERY STAIR NOSING AND TOP LANDING. USE CONTRASTING COLOR.
25. TS 2 1/2"x1 1/2"x8 GA. ASTM A500 GRADE A
26. 2"x2" NAILER WITH 16d AT 12" OC
27. RAMP WIDTH MINIMUM CLEAR DIMENSION IS 5'-0"

DSA 04 10 84 JUL 10 2003

IDENTIFICATION STAMP
DIV OF THE STATE ARCHITECT
OFFICE OF REGULATION SERVICES
AC NO FLS 1 SS NA
DATE JUL 17 2003

IDENTIFICATION STAMP
DIV OF THE STATE ARCHITECT
03 117850
AC NO SS
DATE 8-22-2016

FILE PATH:

PROJECT NO.4736

PC- 04-104/96

REVISIONS

1		
2		
3		
4		
5		

Electrical Engineer's Seal

Mechanical Engineer's Seal

PC Professional of Record Seal — LICENSED ARCHITECT WILLIAM WALLACE No. C-23925 EXPIRATION DATE 12-31-03 STATE OF CALIFORNIA

Architects Seal

PC CBC 2 — IDENTIFICATION STAMP DIV. OF THE STATE ARCHITECT OFFICE OF PROJECT REVIEW SERVICES 04-5796 AC FLS SS DATE 5/9/03

MODTECH INC.™
2830 BARRETT AVENUE FAX (909) 943-4014
PERRIS, CALIF. 92572 FAX (909) 940-0427

PROJECT NUMBER: 4736

WILLIAM SCOTTSMAN

© MODTECH, INC. 2002
ALL RIGHTS RESERVED

DRAWN BY: GL
DATE: 07/07/03
CHECKED BY:
DATE:

MODTECH Index No.

RAMP/LANDING DETAILS

R1.02

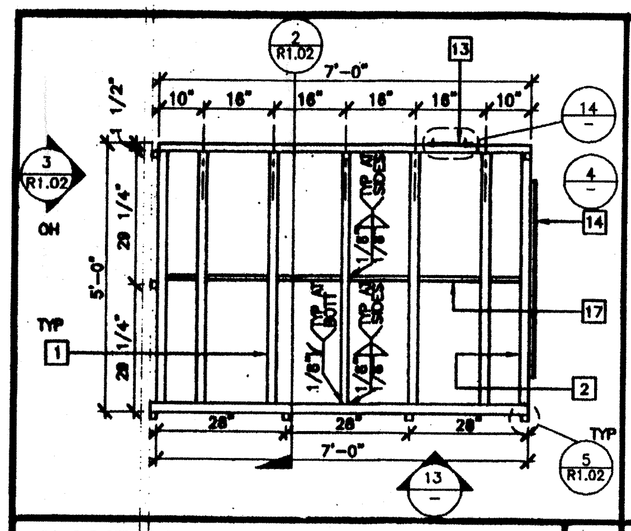

LANDING FRAME 12

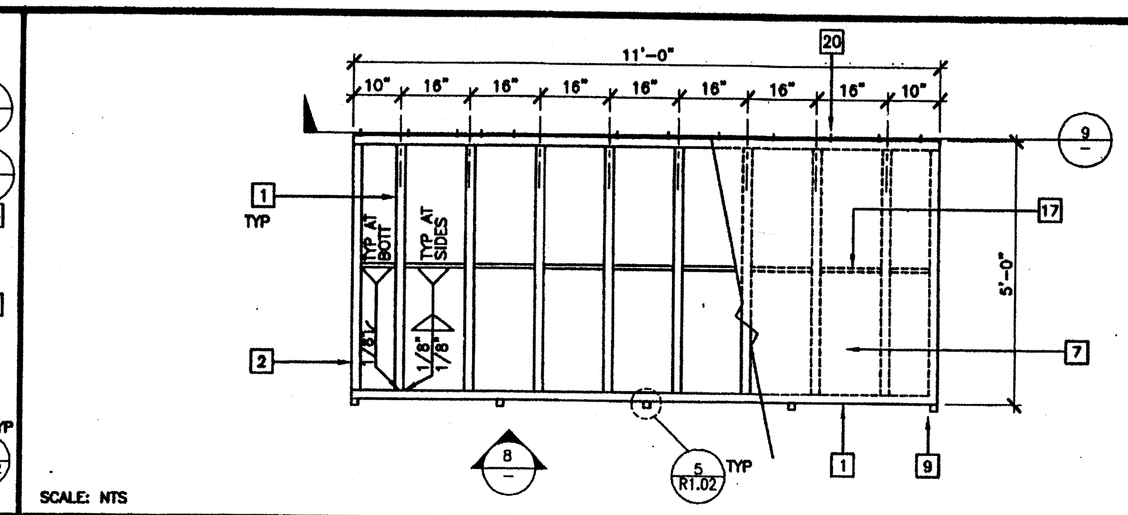

SCALE: NTS

RAMP FRAME 7

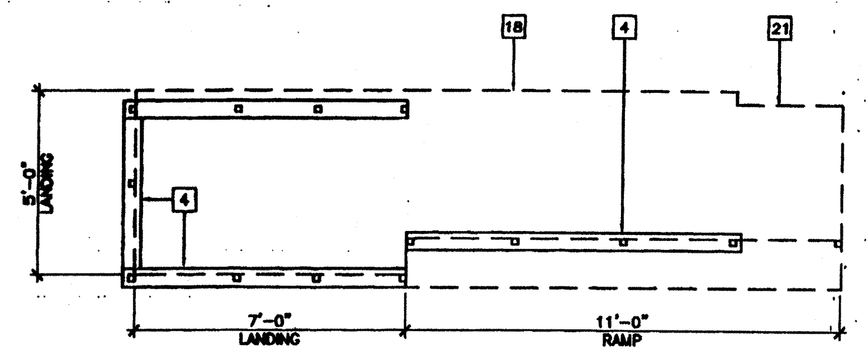

SCALE: 3/8"=1'-0"

SILL PLAN FOR RAMP AND LANDING 1

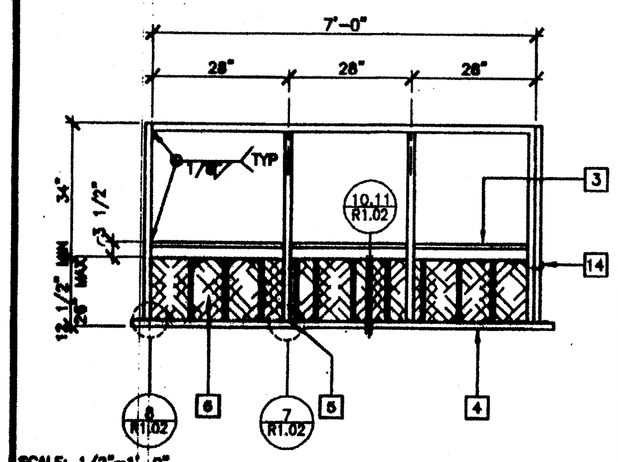

SCALE: 1/2"=1'-0"

LANDING ELEVATION 13

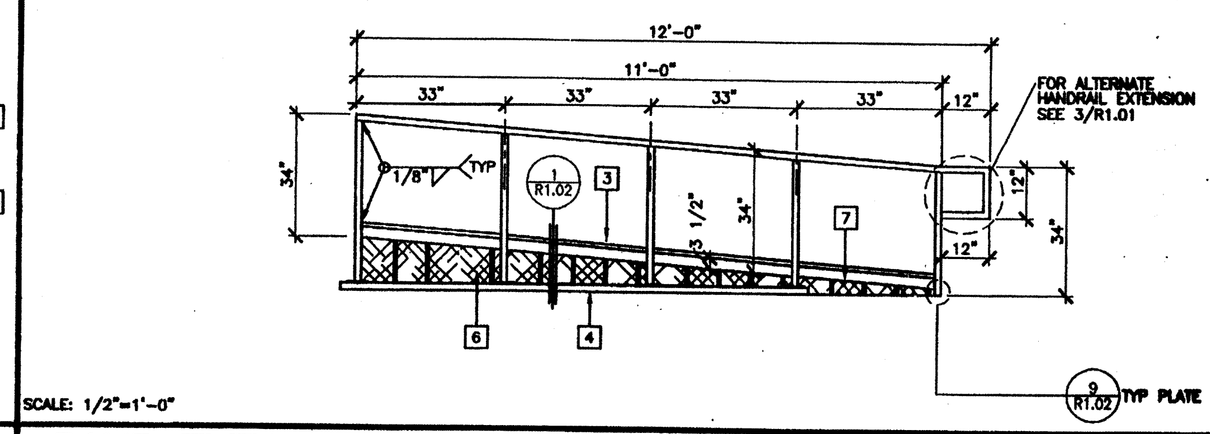

SCALE: 1/2"=1'-0"

RAMP ELEVATION 8

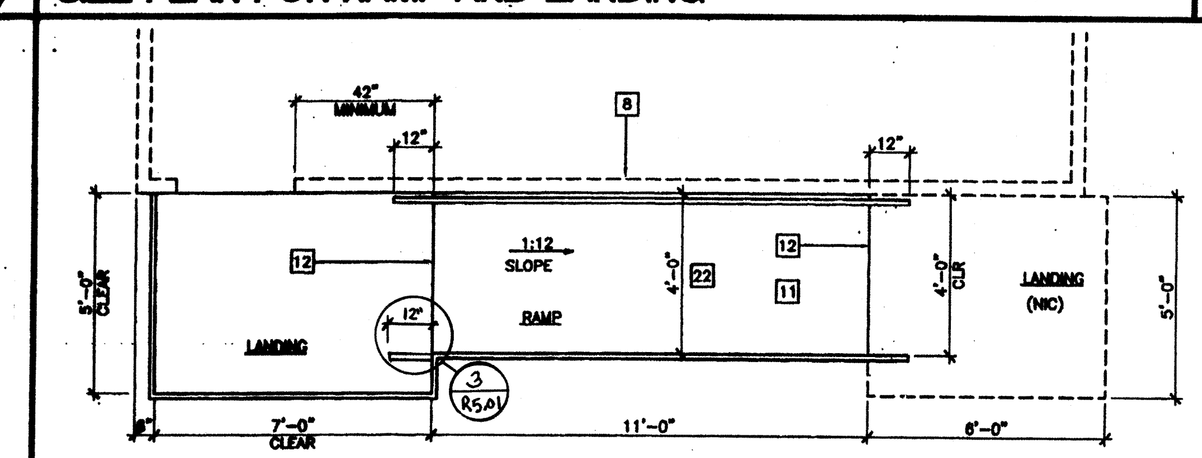

SCALE: 3/8"=1'-0"

RAMP AND LANDING AT BUILDING 2

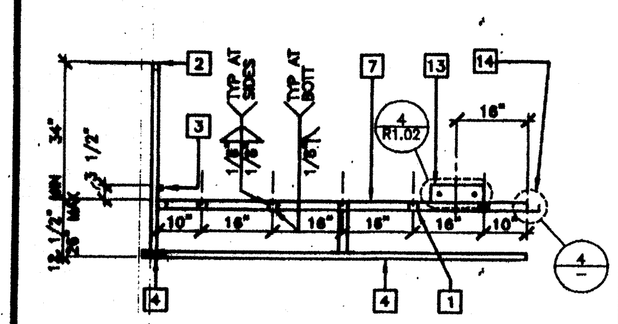

SCALE: NTS

SECTION AT LANDING 14

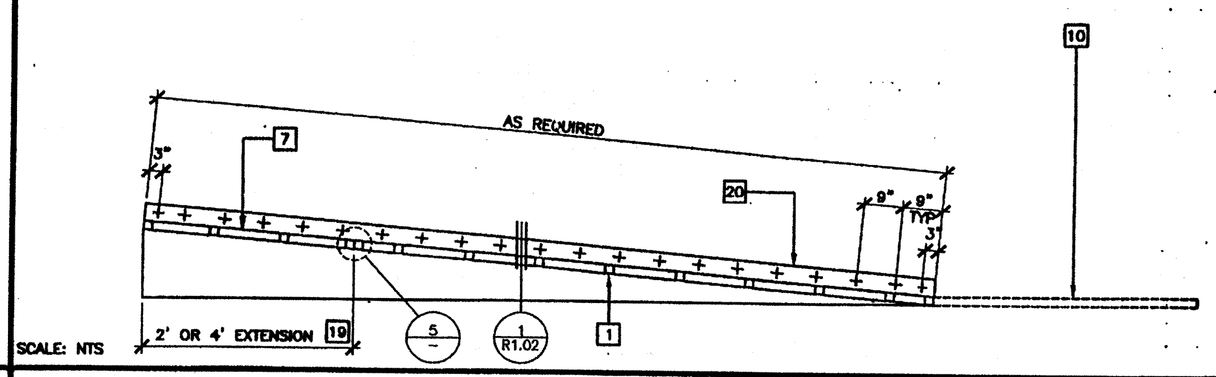

SCALE: NTS

LONGITUDINAL SECTION AT RAMP 9

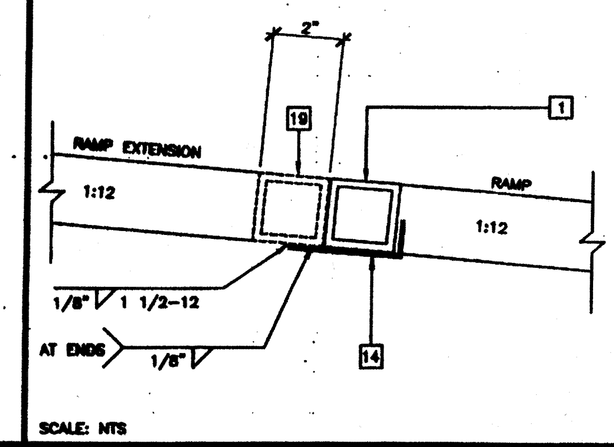

SCALE: NTS

RAMP EXTENSION TO RAMP 5

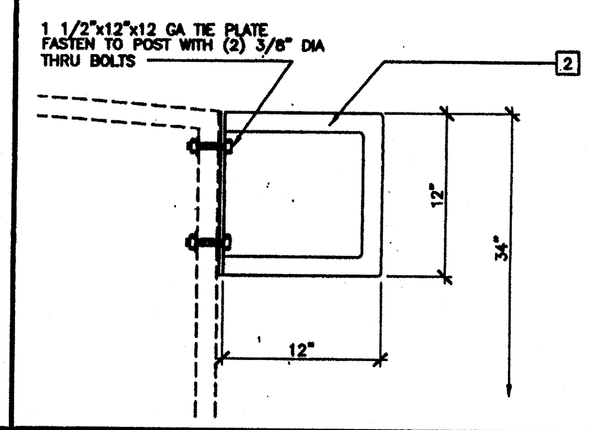

ALTERNATE GUARD RAIL EXTENSION 3

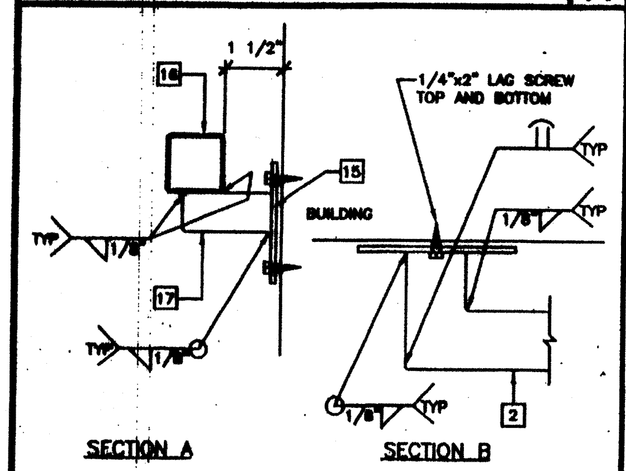

SCALE: NTS

HANDRAIL CONNECTION 15

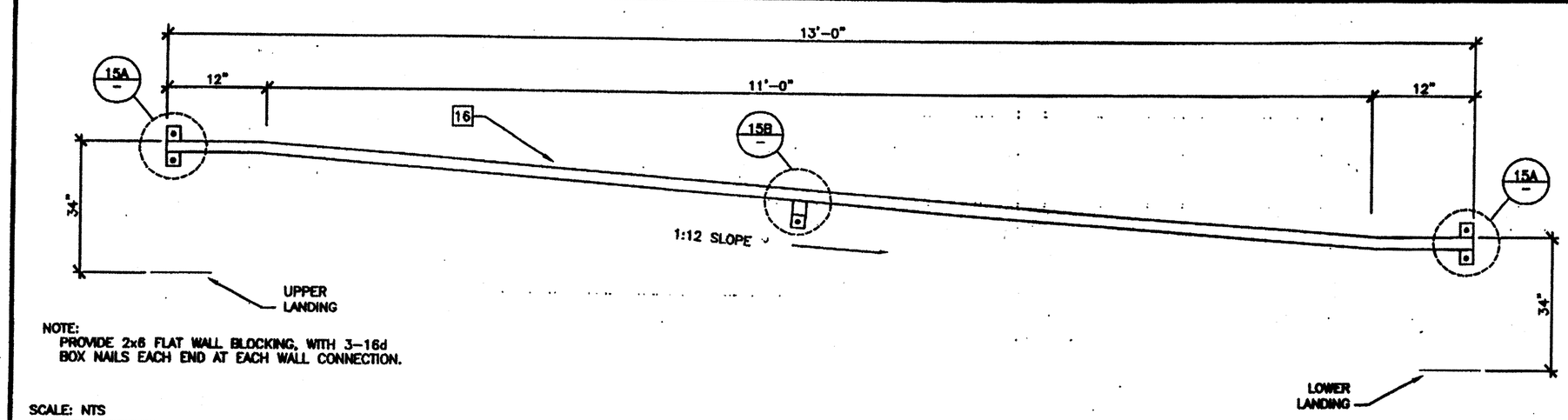

NOTE:
PROVIDE 2x6 FLAT WALL BLOCKING, WITH 3-16d BOX NAILS EACH END AT EACH WALL CONNECTION.

SCALE: NTS

HANDRAIL ATTACHED TO BUILDING (OPTIONAL) 6

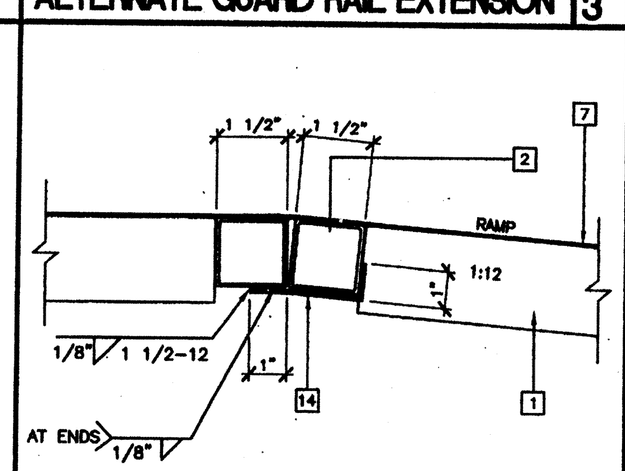

SCALE: NTS

RAMP AT LANDING 4

KEY NOTES

1. TS 2"x2"x14 GA
2. TS 1 1/2"x1 1/2"x14 GA (Fy = 39KSI). ROUNDED OR BEVELED AT CORNERS
3. TS 1"x1"x16 GA WHEELCHAIR GUIDE
4. 2"x6" PRESSURE TREATED SILL PLATE
5. 2"x4"x12 GA BASE PLATE WITH (2) 1/4"x1" LAGS
6. SKIRTING: PLYWOOD TO MATCH BUILDING SIDING. BLOCK ALL EDGES. ATTACH WITH 8d AT 6" OC EDGES AND 12" OC FIELD. AT EDGE CONNECTION TO TUBE STEEL USE #14x2" TEK SCREWS AT 6" OC
7. 12 GA METAL DECK: NON-SLIP SURFACE. DESIGN COEFFICIENT OF FRICTION GREATER THAN 6%. MAINTAINABLE FOR 1 YEAR
8. EXISTING BUILDING
9. 6"x10"x12 GA BASE PLATE AT RAMP TOE
10. LOWER LANDING BY DISTRICT
11. RAMP BY MODTECH
12. FLUSH TRANSITION
13. 6"x12"x10 GA PLATE WITH (2) 1/4"x3" LAGS TO STRUCTURAL FRAME OF BUILDING
14. 3"x1"x3'-0"x10 GA BENT PLATE
15. 2"x4"x 1/8" PLATE
16. TS 1 1/2"x1 1/2"x14 GA HANDRAIL - CONTINUOUS AND UNINTERRUPTED. ROUNDED OR BEVELED AT CORNERS
17. TS 1"x1"x16 GA RAIL SUPPORT
18. LINE OF RAMP/LANDING ABOVE
19. RAMP EXTENSION FRAME
20. 6"x10 GA CONTINUOUS PLATE WITH 1/4"x2" TEK SCREWS AT 9" OC INTO WOOD OR FOUNDATION BLOCKS OR #14x2" TEK SCREWS INTO STEEL AT 9" OC
21. NOTCH BOTTOM PLATE (MUD SILL) AS REQUIRED TO CLEAR RAMP TOE. MAX NOTCH 1 1/2"x4'-0" LONG.
24. NOTCH BOTTOM PLATE (MUD SILL) AS REQUIRED TO CLEAR RAMP TOE. MAX NOTCH 1 1/2"x4'-0" LONG.

IDENTIFICATION STAMP
DIV. OF THE STATE ARCHITECT
OFFICE OF REGULATION SERVICES
[redacted]
AC FLS SS
DATE JUL 17 2003

IDENTIFICATION STAMP
DIV. OF THE STATE ARCHITECT
JUL 10 2003
AC FLS SS
DATE 8-2-2016

NOTES

1. RAMPS: RAMPS SHALL NOT SLOPE MORE THAN 1" IN 12"
2. HANDRAILS: HANDRAILS AT BOTH SIDES OF RAMP AT 34" HEIGHT.
3. SURFACE: LANDING & RAMP TO HAVE NON-SLIP SURFACE AMCOR GRIP II AS MANUFACTURED BY AMERICAN CHEMICAL COMPANY (OR EQUAL)
4. GROUNDING: PROVIDE GROUNDING OF RAMP TO BUILDING FRAME WITH #8 COPPER TO BOTH GROUND LUGS.
5. ARCHITECT SITE/RAMP/LANDING PLANNING: DUE TO VARYING SITE CONDITIONS THE MAXIMUM HEIGHT OF FINISH FLOOR FROM GRADE IS 26". THEREFORE IT IS POSSIBLE THAT THE ACCESS RAMP ATTACHED TO THE BUILDING COULD BE 26'-0" AT A SLOPE OF 1:12. ARCHITECT MUST TAKE INTO ACCOUNT THAT THE RAMP SUPPLIED BY MODTECH INC. IS 11'-0" AT A SLOPE OF 1:12. THEREFORE THE ARCHITECT WILL HAVE TO DESIGN AND PROVIDE DETAILS OF RAMP EXTENSIONS AND BOTTOM LANDING DEPENDING ON PARTICULAR SITE CONDITIONS. IN NO WAY IS MODTECH INC RESPONSIBLE FOR ANY RAMP EXTENSION EXCEEDING THE ORIGINAL PLAN AS SHOWN ON THIS SHEET
6. ALL 1 1/4" AND 1 1/2" TUBE STEEL TO BE OF ASTM A500 GRADE A STEEL (Fy = 39 KSI)

FILE PATH: --

PROJECT NO. 4736

PC- 04-104796

REVISIONS

1		
2		
3		
4		
5		

Electrical Engineer's Seal | Mechanical Engineer's Seal | PC Professional of Record Seal | Architects Seal

LICENSED ARCHITECT
CHRISTOPHER HALLIGAN
No. 4796
12/31/05
RENEWAL DATE
STATE OF CALIFORNIA

IDENTIFICATION STAMP
DIV. OF THE STATE ARCHITECT
OFFICE OF REGULATION SERVICES
[redacted]
AC FLS SS
DATE

MODTECH INC.
2830 BARRETT AVENUE
PERRIS, CALIF. 92571
PH (909) 943-4014
FAX (909) 940-0427

PROJECT NUMBER: 4736

WILLIAM SCOTTSMAN

© MODTECH, INC. 2002

DRAWN BY: GL
DATE: 07/07/03
CHECKED BY:
DATE:

MODTECH Index No.

RAMP/LANDING

11' RAMPS

R5.01