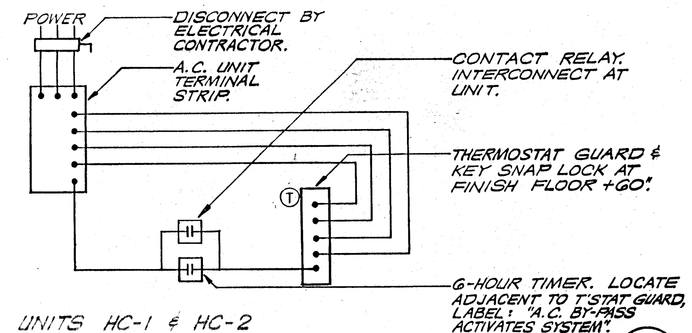

UNITS HC-1 & HC-2
PACKAGE A.C. UNIT CONTROL DIAGRAM (J / M-8)
SCALE: NONE

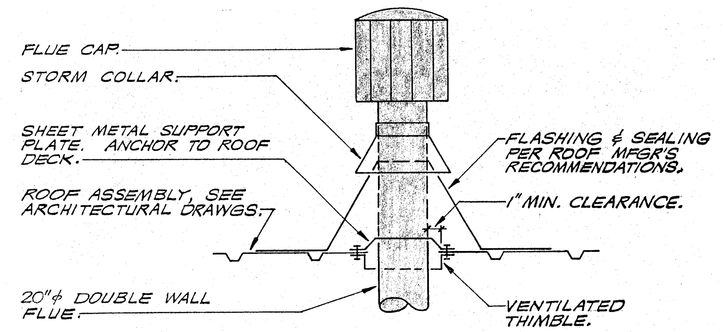

FLUE THRU ROOF DETAIL (D / M-8)
SCALE: NONE

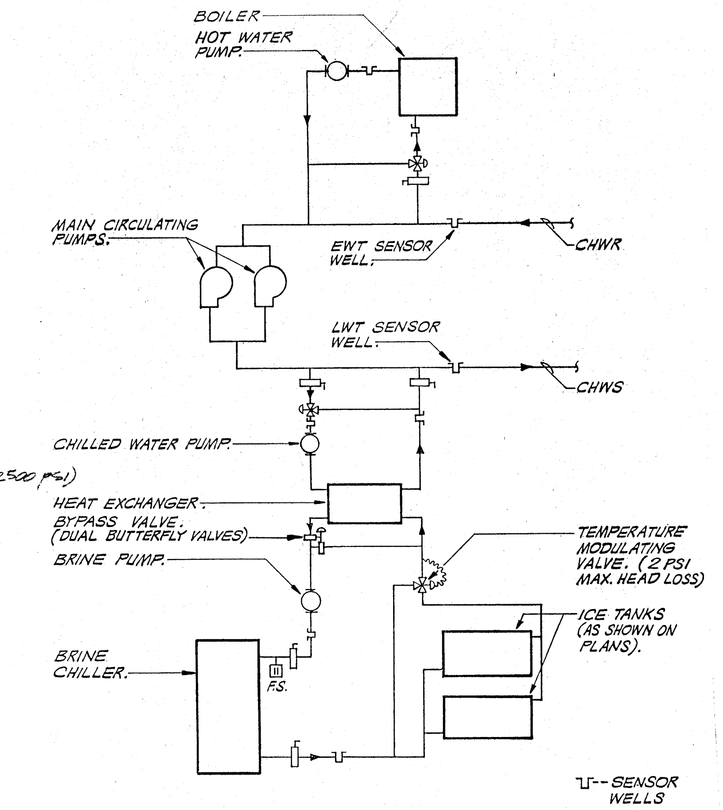

CENTRAL PLANT PIPING SCHEMATIC (A / M-8)
SCALE: NONE

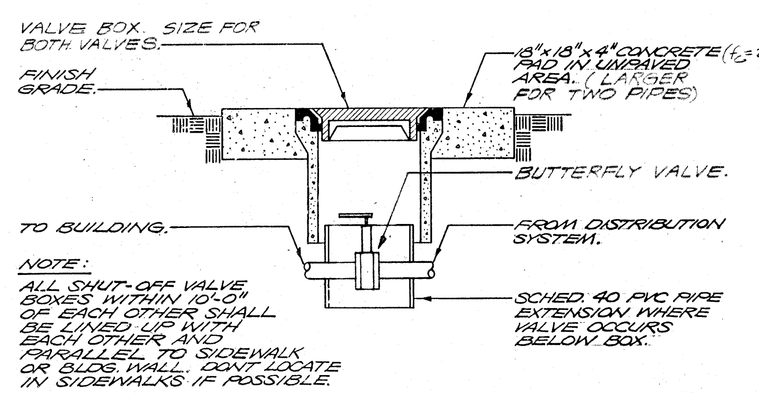

NOTE:
ALL SHUT-OFF VALVE BOXES WITHIN 10'-0" OF EACH OTHER SHALL BE LINED UP WITH EACH OTHER AND PARALLEL TO SIDEWALK OR BLDG. WALL. DON'T LOCATE IN SIDEWALKS IF POSSIBLE.

SHUT-OFF VALVE IN BOX DETAIL (E / M-8)
SCALE: NONE

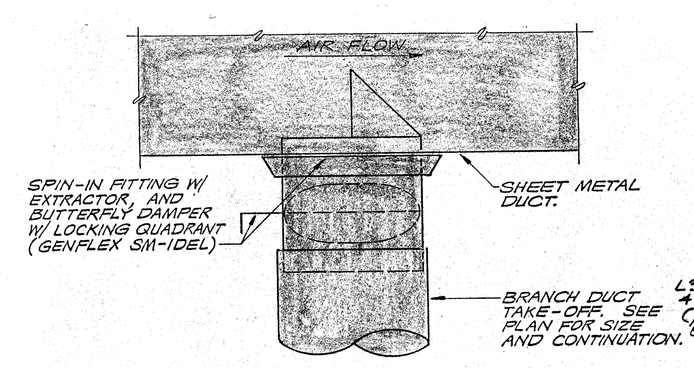

TYPICAL SPIN-IN TAKE-OFF (F / M-8)
SCALE: NONE

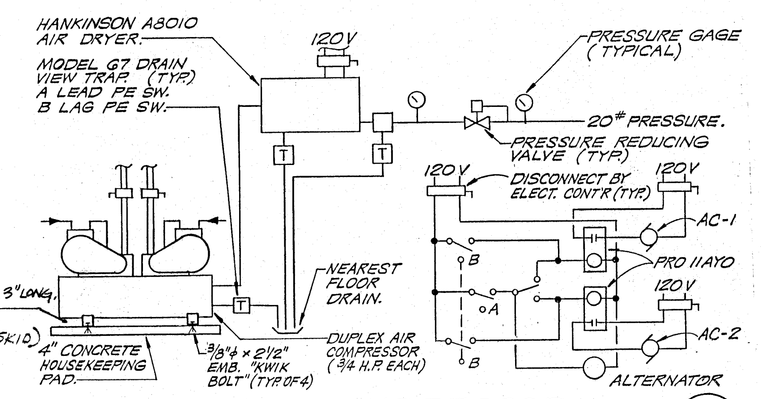

CONTROL AIR COMPRESSOR (B / M-8)
SCALE: NONE

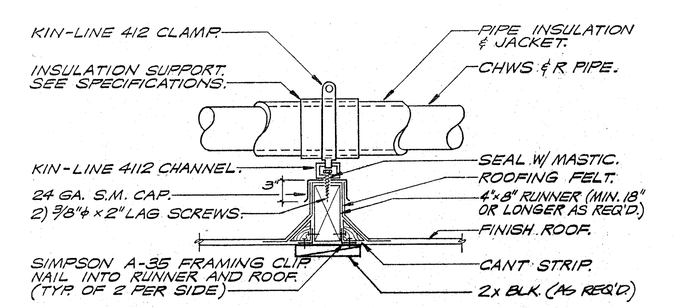

PIPE SUPPORT ON ROOF (G / M-8)
SCALE: NONE

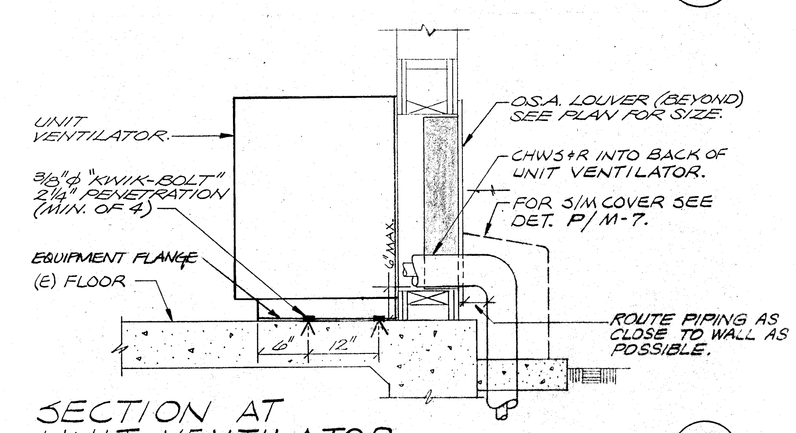

SECTION AT UNIT VENTILATOR (C / M-8)
SCALE: 1"=1'-0"

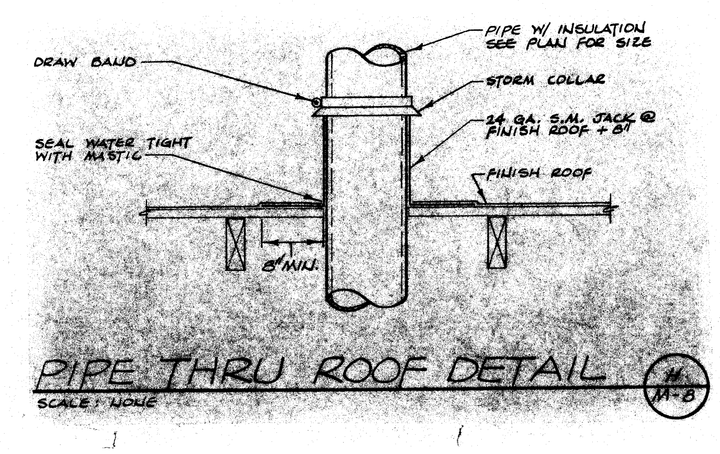

PIPE THRU ROOF DETAIL (H / M-8)
SCALE: NONE

TITLE 24 & 1988 UBC
CERTIFICATION BY HCD
Department of General Services
Office of State Architect
DEC 7 1990
Structural Safety Section
A 53548 JCH/LA

DEC 7 1990
STATE FIRE MARSHAL
SCHOOL BUILDING

KLASSEN CORPORATION
Architecture
Planning
Construction
2021 Westwind Drive
Bakersfield, CA 93301
(805) 327-0875
C-6 A/E C-10 481

The above drawings and specifications and ideas, designs and arrangements represented thereby are and shall remain the property of the architect and no part thereof shall be copied, disclosed to others or used in connection with any work or project other than the specific project for which they have been prepared and developed without the written consent of the architect. Visual contact with these drawings or specifications shall constitute conclusive evidence of acceptance of these restrictions.

Written dimensions on these drawings shall have precedence over scaled dimension; contractors shall verify and be responsible for all dimensions and conditions on the job and this office must be notified of any variations from the dimensions and conditions shown by these drawings. Shop details must be submitted to this office for approval before proceeding with fabrication.

BAKERSFIELD CITY SCHOOL DISTRICT
WAYSIDE ELEMENTARY SCHOOL MODERNIZATION
BAKERSFIELD, CALIFORNIA

WAYSIDE ELEMENTARY SCHOOL
BAKERSFIELD CITY SCHOOL DISTRICT
1000 MING AVENUE

Sheet title: DETAILS

Lawrence • Nye • Becker Associates
CONSULTING MECHANICAL ENGINEERS, INCORPORATED
1300 W. Shaw Avenue, Suite 120 Fresno, CA 93711
(209) 226-0101 FAX: (209) 224-6337

MC # 11064

Date:	Issued for:
12/22/88	OLA/OSA APPROVAL
10/31/90	O.S.A. BACKCHECK

Date:	Revisions:

Drawn by: D. ENNS
Checked by: G. NYE
Job no: 1702
Sheet: M-8
Sheet of:
Date:

OLA APPLICATION NO. 77-58812