X:/JOBS/02/2002-2X/2002-21/2002-21-E.4.DWG DAJ 07/23/02

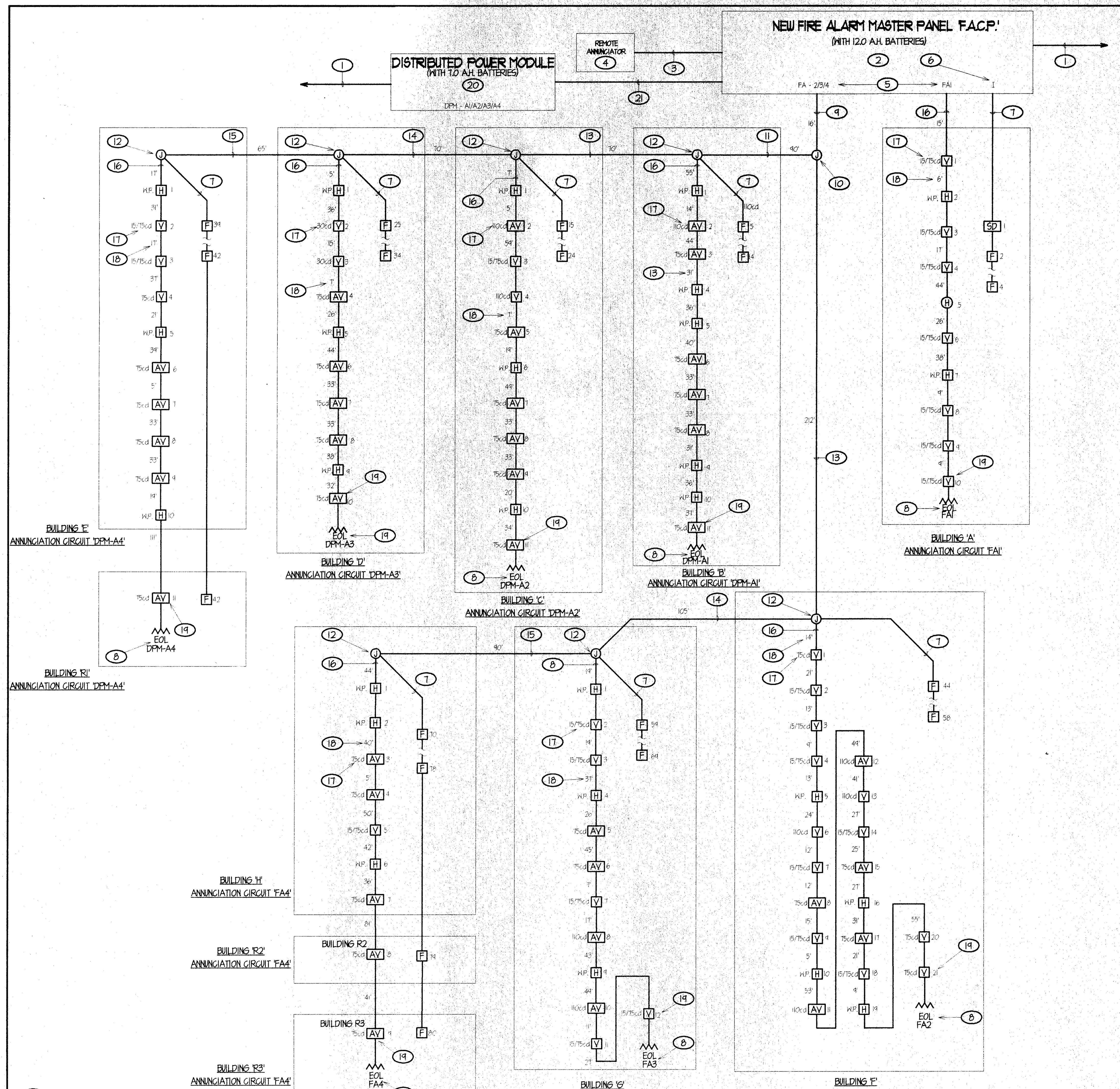

(1) FIRE ALARM SINGLE LINE DIAGRAM

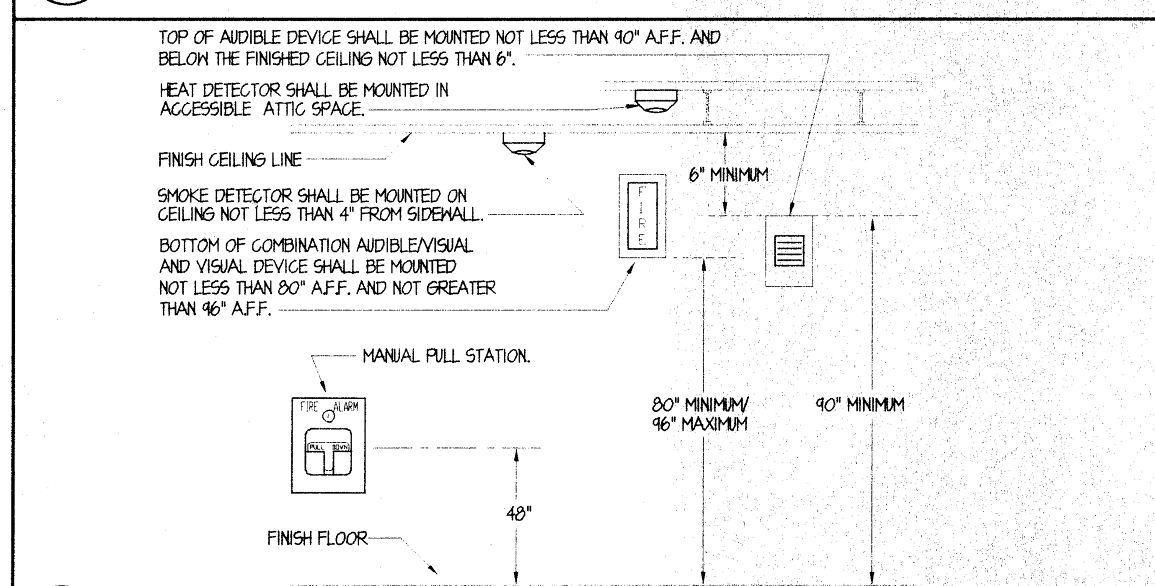

(2) FIRE ALARM DEVICE ELEVATION

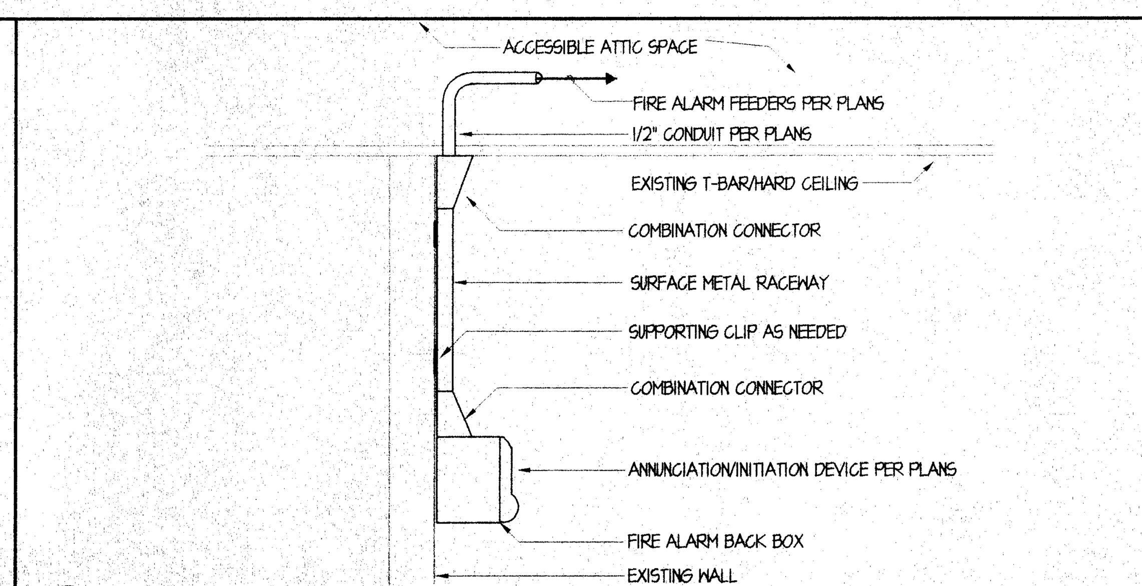

(4) FIRE ALARM DEVICE INSTALLATION

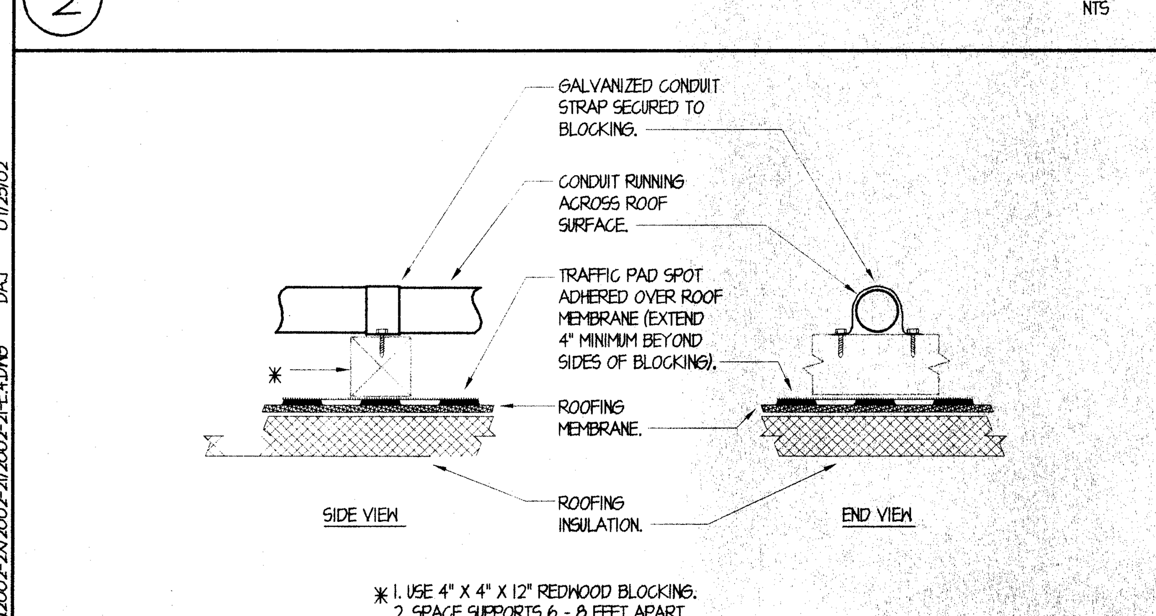

(3) CONDUIT SUPPORT AT ROOF

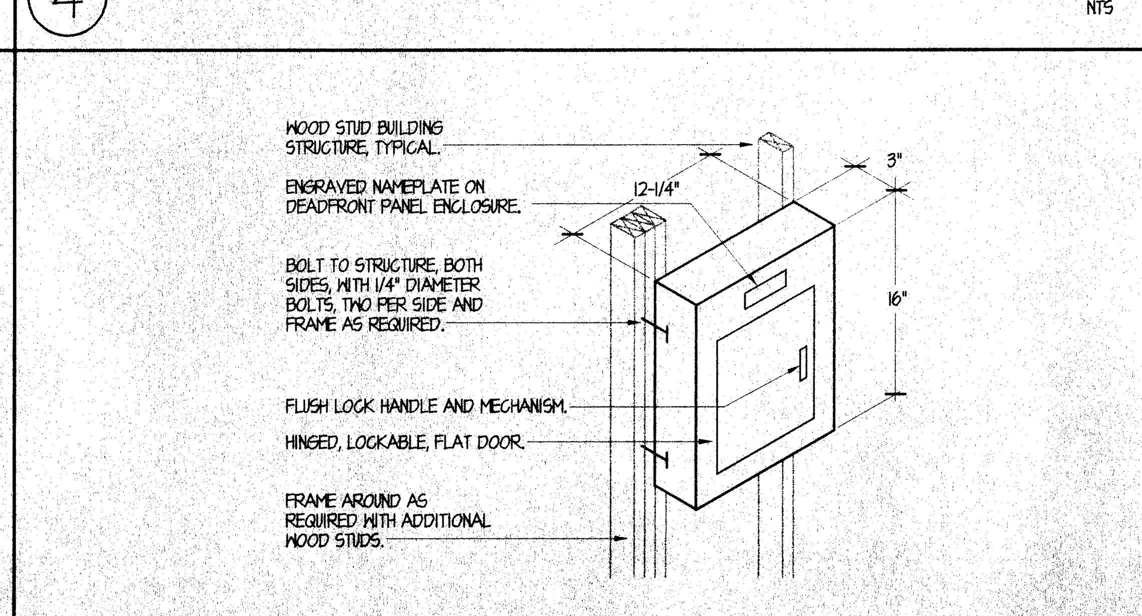

(5) SURFACE MOUNTED FIRE ALARM MASTER PANEL

FIRE ALARM SINGLE LINE DIAGRAM NOTES

1. 120V POWER CONNECTION PER PLANS. REFER TO BUILDING 'A' FIRE ALARM SYSTEM PLAN, SHEET E-2 FOR COORDINATION/REFERENCE.
2. PROVIDE NEW 24VDC FIRE ALARM MASTER PANEL PER SPECIFICATIONS AND INSTALL PER PLANS AND MANUFACTURERS WRITTEN INSTRUCTIONS.
3. CABLING/WIRING PER MANUFACTURERS RECOMMENDATION. REFER TO BUILDING 'A' FIRE ALARM SYSTEM PLAN, SHEET E-2 FOR COORDINATION/REFERENCE.
4. PROVIDE REMOTE ANNUNCIATOR PER SPECIFICATIONS AND INSTALL PER PLANS AND MANUFACTURERS WRITTEN INSTRUCTIONS.
5. ANNUNCIATION CIRCUIT DESIGNATION, TYPICAL.
6. INITIATION CIRCUIT DESIGNATION, TYPICAL.
7. ONE 'F' CABLE BETWEEN INITIATION DEVICES, TYPICAL. REFER TO RESPECTIVE FIRE ALARM SYSTEM PLAN EXACT CONDUIT SIZE AND CIRCUIT ROUTING.
8. END OF LINE RESISTOR FOR ANNUNCIATION CIRCUIT.
9. 14 #12 CU THWN (ANNUNCIATION), ONE 'F' CABLE. REFER TO SITE FIRE ALARM PLAN, SHEET E-1 FOR EXACT CONDUIT SIZE AND CIRCUIT ROUTING.
10. 8" x 8" x 4" NEMA 3R SCREW COVER ENCLOSURE. REFER TO SITE FIRE ALARM SYSTEM PLAN, SHEET E-1 FOR COORDINATION/REFERENCE.
11. 8 #12 CU THWN (ANNUNCIATION), ONE 'F' CABLE. REFER TO SITE FIRE ALARM PLAN, SHEET E-1 FOR EXACT CONDUIT SIZE AND CIRCUIT ROUTING.
12. 6" x 6" x 4" NEMA 3R SCREW COVER ENCLOSURE. REFER TO SITE FIRE ALARM SYSTEM PLAN, SHEET E-1 FOR COORDINATION/REFERENCE.
13. 6 #12 CU THWN (ANNUNCIATION), ONE 'F' CABLE. REFER TO SITE FIRE ALARM PLAN, SHEET E-1 FOR EXACT CONDUIT SIZE AND CIRCUIT ROUTING.
14. 4 #12 CU THWN (ANNUNCIATION), ONE 'F' CABLE. REFER TO SITE FIRE ALARM PLAN, SHEET E-1 FOR EXACT CONDUIT SIZE AND CIRCUIT ROUTING.
15. 2 #12 CU THWN (ANNUNCIATION), ONE 'F' CABLE. REFER TO SITE FIRE ALARM PLAN, SHEET E-1 FOR EXACT CONDUIT SIZE AND CIRCUIT ROUTING.
16. 2 #12 CU THWN (ANNUNCIATION), ONE 'F' CABLE. REFER TO RESPECTIVE FIRE ALARM SYSTEM PLAN FOR EXACT CONDUIT SIZE AND CIRCUIT ROUTING.
17. NOMINAL CANDELA RATING DENOTATION USED IN VOLTAGE DROP CALCULATIONS THIS SHEET.
18. DISTANCE USED IN VOLTAGE DROP CALCULATIONS, THIS SHEET, TYPICAL.
19. DEVICE NUMBER USED IN VOLTAGE DROP CALCULATIONS, THIS SHEET, TYPICAL.
20. PROVIDE NEW 24VDC DISTRIBUTED POWER MODULE PER SPECIFICATIONS AND INSTALL PER PLANS AND MANUFACTURERS WRITTEN INSTRUCTIONS.
21. 10 #12 CU THWN (ANNUNCIATION). REFER TO FIRE ALARM PLAN, SHEET E-2 FOR EXACT CONDUIT SIZE AND CIRCUIT ROUTING.

FIRE ALARM SYSTEM INSTALLATION NOTES

ALL DRAWINGS ARE DIAGRAMMATIC ONLY, AND SHALL NOT BE USED IN DETERMINING ACTUAL CONDUIT ROUTING. THE CONTRACTOR SHALL VERIFY ALL CONDUIT ROUTING CONDITIONS AT THE PROJECT SITE AS CONSTRUCTION PROGRESSES.

ALL FIRE ALARM DATA COMMUNICATIONS AND INITIATING CIRCUITS SHALL BE INSTALLED UTILIZING SOLID COPPER CONDUCTORS WITH OUTER COVERING COLORS PER THE SPECIFICATIONS AND AS SHOWN ON THE DRAWINGS. ALL SMOKE DAMPER AND REMOTE TROUBLE INDICATOR CIRCUITS SHALL BE YELLOW. ALL CIRCUITS SHALL BE INDIVIDUALLY LABELLED, BOTH AT THE DEVICE END AND AT THE SIGNAL TERMINAL CABINET AND/OR FIRE ALARM MASTER PANEL TERMINATION POINT.

ALL FIRE ALARM CIRCUITS SHALL CONTINUOUS FROM DEVICE TO DEVICE. SPLICES ARE NOT ALLOWED UNLESS IN COVERED JUNCTION BOXES ON APPROVED TERMINAL BLOCKS. 'T' TAPPING IS ALLOWED ONLY UNDER THESE CONDITIONS.

FIRE ALARM SYSTEM LEVEL OF AUDIBILITY

ALARM INDICATING DEVICES OF A FIRE ALARM SYSTEM INTENDED TO ALERT ALL OCCUPANTS SHALL BE SO LOCATED AND UNOBSTRUCTED AS TO CAUSE A LEVEL OF AUDIBILITY OF NOT LESS THAN 15 DB ABOVE AMBIENT NOISE LEVELS MEASURED FOUR FEET ABOVE THE FLOOR INSIDE BUILDING.

AMBIENT NOISE LEVELS SHALL BE CONSTRUED TO MEAN THAT WHICH CAN NORMALLY BE EXPECTED TO EXIST WHEN THE FACILITY, BUILDING, ROOM OR AREA IS FUNCTIONING UNDER NORMAL OPERATIVE OR WORKING CONDITIONS.

FIRE ALARM SYSTEM SHALL SOUND WITH THE TEMPORAL PATTERN ADOPTED BY THE STATE OF CALIFORNIA.

FIRE ALARM SYSTEM TESTING REQUIREMENTS

UPON COMPLETION OF THE INSTALLATION OF THE FIRE PROTECTIVE SIGNALLING EQUIPMENT, A SATISFACTORY TEST OF THE ENTIRE SYSTEM SHALL BE MADE IN THE PRESENCE OF THE ENFORCING FIRE AGENCY PER CHAPTER 7, NFPA 72, AND A CERTIFICATE OF COMPLETION SHALL BE PROVIDED TO THE OWNER PER CHAPTER 1, NFPA 72 AND THE CALIFORNIA FIRE CODE, SECTION 1007.3.4.

FIRE ALARM APPROVAL

THE FIRE ALARM SYSTEM DESIGN IS A COMPLETE PLAN SUBMITTAL PER DSA-ORS POLICY. THE CONTRACTOR SHALL INSTALL THE MANUAL, ADDRESSABLE FIRE PROTECTION SYSTEM AS SHOWN AND AS HEREIN SPECIFIED. IF ANY SUBSTITUTION OF FIRE ALARM EQUIPMENT IS TO BE REQUESTED, SUCH REQUEST SHALL BE MADE A MINIMUM OF TEN BUSINESS DAYS PRIOR TO PROJECT BID DATE. THE CONTRACTOR SUBMITTAL SHALL INCLUDE ALL MANUFACTURERS CATALOG EQUIPMENT SPECIFICATION SHEETS, THE CSFM LISTING SHEETS FOR INDIVIDUAL COMPONENTS COMPRISING THE SUBSTITUTED FIRE ALARM SYSTEM, BATTERY LOAD CALCULATIONS AND VOLTAGE DROP CALCULATIONS FOR EACH SIGNALLING CIRCUIT. SHOULD THE SUBSTITUTED SYSTEM BE APPROVED AND INSTALLED, THE CONTRACTOR SHALL PROVIDE ONE SET OF REPRODUCIBLE, CAD GENERATED, DSA-ORS APPROVED AND STAMPED 'AS-CONSTRUCTED' DRAWINGS TO THE ENGINEER UPON COMPLETION OF THE SYSTEM INSTALLATION.

FIRE ALARM SYMBOL SCHEDULE

Symbol	Description
▭	FIRE ALARM MASTER PANEL - NOTIFIER #AFP-300 W/CAB-B (C.S.F.M. # 7165-0028: 181)
RA	FIRE ALARM REMOTE ANNUNCIATOR - NOTIFIER #LCD-80 (C.S.F.M.# 7165-0028: 181)
SD	AUTOMATIC SMOKE DETECTOR (PHOTOELECTRIC) - NOTIFIER #FSP-751 (C.S.F.M. #7272-0028: 206)
DD	DUCT SMOKE DETECTOR NOTIFIER #FSD-751RP (C.S.F.M. #7300-0028:205)
F	MANUAL PULL STATION - NOTIFIER #NBG-12LX (C.S.F.M. #7150-0028: 199)
H	WALL MOUNTED AUDIBLE DEVICE - 75dba SETTING NOTIFIER SPECTRALERT #H12/24 WITH SURFACE MOUNT BACKBOX SKIRT #BBS (C.S.F.M. #7135-1204:143)
H WP	WALL MOUNTED AUDIBLE DEVICE - 100dba SETTING NOTIFIER SPECTRALERT #H12/24 WITH SURFACE MOUNT WEATHERPROOF BACKBOX #WBB (C.S.F.M. #7135-1204:143)
AV	WALL MOUNTED AUDIBLE/VISUAL DEVICE - 82dba SETTING, CANDELA RATING PER PLANS NOTIFIER SPECTRALERT #P2475 WITH SURFACE MOUNT BACKBOX SKIRT #BBS NOTIFIER SPECTRALERT #P24110 WITH SURFACE MOUNT BACKBOX SKIRT #BBS (C.S.F.M. #7135-1204:173)
V	WALL MOUNTED VISUAL DEVICE - CANDELA RATING PER PLANS NOTIFIER SPECTRALERT #S2415175 WITH SURFACE MOUNT BACKBOX SKIRT #BBS NOTIFIER SPECTRALERT #S2475 WITH SURFACE MOUNT BACKBOX SKIRT #BBS NOTIFIER SPECTRALERT #S24110 WITH SURFACE MOUNT BACKBOX SKIRT #BBS (C.S.F.M. #7135-1204:174)
EOL	CIRCUIT END OF LINE RESISTOR.

FIRE ALARM SYSTEM OPERATIONAL MATRIX

SYMBOL	DEVICE DESCRIPTION	ACTIVATE EVACUATION HORNS/ STROBES	RELEASE DOOR CLOSURE DEVICE	SHUT DOWN HVAC FANS	ANNUNCIATE AT BUILDING F.A.C.P.	ACTIVATE FIRE/ SMOKE DAMPERS	ACTIVATE FIRE RATED ROLL-UP DOORS
F	MANUAL PULL STATION	X			X		
DD	DUCT SMOKE DETECTOR	X		X	X		
SD	SMOKE DETECTOR	X	X		X	X	X
HD	HEAT DETECTOR	X	X		X		X
WF	WATERFLOW SWITCH	X			X		
TS	TAMPER SWITCH				SUPERVISORY		

FIRE ALARM BATTERY CALCULATIONS-DISTRIBUTED POWER MODULE

EQUIPMENT DESCRIPTION		QUANTITY EXISTING	QUANTITY NEW	SUPERVISORY CURRENT (AMPERES) EACH	SUPERVISORY CURRENT (AMPERES) SUB-TOTAL	ALARM CURRENT (AMPERES) EACH	ALARM CURRENT (AMPERES) SUB-TOTAL
DISTRIBUTED POWER MODULE			1	0.075	0.075	0.175	0.175
AUDIBLE/VISUALS	110cd		2	0.000	0.000	0.165	0.330
AUDIBLE/VISUALS	75cd		20	0.000	0.000	0.148	2.960
VISUALS	30cd		2	0.000	0.000	0.092	0.184
VISUALS	15/75cd		3	0.000	0.000	0.066	0.198
VISUALS	75cd		1	0.000	0.000	0.123	0.123
VISUALS	110cd		1	0.000	0.000	0.140	0.140
HORN			14	0.000	0.000	0.023	0.322
SUB-TOTAL AMPERES				0.075 AMPS		4.432 AMPS	
				x 24 HOURS		x 0.084 HOURS	
SUB-TOTAL AMPERE-HOURS				1.800 A.H.		0.361 A.H.	
TOTAL REQUIRED AMPERE-HOURS FOR:						2.161 A.H.	
BATTERY NON-LINEAR DISCHARGE CHARACTERISTIC FACTOR						x 1.2	
TOTAL MINIMUM AMPERE HOURS REQUIRED						2.600 A.H.	
PROVIDED BATTERY CAPACITY						7 A.H.	

FIRE ALARM VOLTAGE DROP CALCULATIONS — DISTRIBUTED POWER MODULE

DEVICE NUMBER	UNIT AMPERES	TOTAL AMPERES	WIRE LENGTH	AWG SIZE	CIRC. MILS	OHMS RES. PER/FT.	VOLT DROP	PERCENT DROP
1	0.023	1.020	161'	#12	6530	0.00164	0.5371	2.238
2	0.165	0.997	14'	#12	6530	0.00164	0.0456	0.190
3	0.148	0.832	44'	#12	6530	0.00164	0.1197	0.499
4	0.023	0.684	31'	#12	6530	0.00164	0.0693	0.289
5	0.023	0.661	36'	#12	6530	0.00164	0.0778	0.324
6	0.148	0.638	40'	#12	6530	0.00164	0.0835	0.348
7	0.148	0.490	33'	#12	6530	0.00164	0.0529	0.220
8	0.148	0.342	33'	#12	6530	0.00164	0.0369	0.154
9	0.023	0.194	31'	#12	6530	0.00164	0.0197	0.082
10	0.023	0.171	36'	#12	6530	0.00164	0.0201	0.084
11	0.148	0.148	37'	#12	6530	0.00164	0.0179	0.075
ANNUNCIATION CIRCUIT	DISTRIBUTED POWER MODULE- 'A1' CIRCUIT		TOTAL VOLTAGE DROP:					1.321
			TOTAL PERCENTAGE DROP IN CIRCUIT:					5.506%
BASED UPON A 24 VDC CIRCUIT OPERATING AT 70 DEGREES FARENHEIT								

FIRE ALARM VOLTAGE DROP CALCULATIONS — DISTRIBUTED POWER MODULE

DEVICE NUMBER	UNIT AMPERES	TOTAL AMPERES	WIRE LENGTH	AWG SIZE	CIRC. MILS	OHMS RES. PER/FT.	VOLT DROP	PERCENT DROP
1	0.023	1.180	183'	#12	6530	0.00164	0.7062	2.943
2	0.165	1.157	5'	#12	6530	0.00164	0.0189	0.079
3	0.066	0.992	54'	#12	6530	0.00164	0.1914	0.798
4	0.140	0.926	10'	#12	6530	0.00164	0.0303	0.126
5	0.148	0.786	7'	#12	6530	0.00164	0.0180	0.075
6	0.023	0.638	19'	#12	6530	0.00164	0.0396	0.165
7	0.148	0.615	49'	#12	6530	0.00164	0.0986	0.411
8	0.148	0.467	33'	#12	6530	0.00164	0.0504	0.210
9	0.148	0.319	33'	#12	6530	0.00164	0.0344	0.143
10	0.023	0.171	20'	#12	6530	0.00164	0.0112	0.047
11	0.148	0.148	34'	#12	6530	0.00164	0.0165	0.069
ANNUNCIATION CIRCUIT	DISTRIBUTED POWER MODULE- 'A2' CIRCUIT		TOTAL VOLTAGE DROP:					1.321
			TOTAL PERCENTAGE DROP IN CIRCUIT:					5.506%
BASED UPON A 24 VDC CIRCUIT OPERATING AT 70 DEGREES FARENHEIT								

FIRE ALARM VOLTAGE DROP CALCULATIONS — DISTRIBUTED POWER MODULE

DEVICE NUMBER	UNIT AMPERES	TOTAL AMPERES	WIRE LENGTH	AWG SIZE	CIRC. MILS	OHMS RES. PER/FT.	VOLT DROP	PERCENT DROP
1	0.023	0.993	251'	#12	6530	0.00164	0.8151	3.396
2	0.092	0.970	36'	#12	6530	0.00164	0.1142	0.476
3	0.092	0.878	15'	#12	6530	0.00164	0.0431	0.179
4	0.148	0.786	7'	#12	6530	0.00164	0.0180	0.075
5	0.023	0.638	26'	#12	6530	0.00164	0.0542	0.226
6	0.148	0.615	44'	#12	6530	0.00164	0.0885	0.369
7	0.148	0.467	33'	#12	6530	0.00164	0.0504	0.210
8	0.148	0.319	33'	#12	6530	0.00164	0.0344	0.143
9	0.023	0.171	38'	#12	6530	0.00164	0.0213	0.089
10	0.148	0.148	32'	#12	6530	0.00164	0.0155	0.065
ANNUNCIATION CIRCUIT	DISTRIBUTED POWER MODULE- 'A3' CIRCUIT		TOTAL VOLTAGE DROP:					1.255
			TOTAL PERCENTAGE DROP IN CIRCUIT:					5.228%
BASED UPON A 24 VDC CIRCUIT OPERATING AT 70 DEGREES FARENHEIT								

FIRE ALARM VOLTAGE DROP CALCULATIONS — DISTRIBUTED POWER MODULE

DEVICE NUMBER	UNIT AMPERES	TOTAL AMPERES	WIRE LENGTH	AWG SIZE	CIRC. MILS	OHMS RES. PER/FT.	VOLT DROP	PERCENT DROP
1	0.023	1.064	328'	#12	6530	0.00164	1.413	4.756
2	0.066	1.041	31'	#12	6530	0.00164	0.1055	0.440
3	0.066	0.975	17'	#12	6530	0.00164	0.0542	0.226
4	0.123	0.909	37'	#12	6530	0.00164	0.1100	0.458
5	0.023	0.786	21'	#12	6530	0.00164	0.0540	0.225
6	0.148	0.763	39'	#12	6530	0.00164	0.0973	0.405
7	0.148	0.615	5'	#12	6530	0.00164	0.0101	0.042
8	0.148	0.467	33'	#12	6530	0.00164	0.0504	0.210
9	0.148	0.319	33'	#12	6530	0.00164	0.0344	0.143
10	0.023	0.171	19'	#12	6530	0.00164	0.0106	0.044
11	0.148	0.148	111'	#12	6530	0.00164	0.0537	0.224
ANNUNCIATION CIRCUIT	DISTRIBUTED POWER MODULE- 'A4' CIRCUIT		TOTAL VOLTAGE DROP:					1.321
			TOTAL PERCENTAGE DROP IN CIRCUIT:					5.506%
BASED UPON A 24 VDC CIRCUIT OPERATING AT 70 DEGREES FARENHEIT								

FIRE ALARM BATTERY CALCULATIONS-FIRE ALARM MASTER PANEL

EQUIPMENT DESCRIPTION		QUANTITY EXISTING	QUANTITY NEW	SUPERVISORY CURRENT (AMPERES) EACH	SUPERVISORY CURRENT (AMPERES) SUB-TOTAL	ALARM CURRENT (AMPERES) EACH	ALARM CURRENT (AMPERES) SUB-TOTAL
DISTRIBUTED POWER MODULE			1	0.075	0.075	0.175	0.175
BATTERY CHARGER			1	0.100	0.100	0.100	0.100
MASTER PANEL			1	0.125	0.125	0.320	0.320
REMOTE ANNUNICIATOR			1	0.100	0.100	0.100	0.100
SMOKE DETECTOR			1	0.00027	0.00027	0.00027	0.00027
PULL STATIONS			67	0.0003	0.0201	0.0003	0.0201
AUDIBLE/VISUALS	110cd		4	0.000	0.000	0.165	0.660
AUDIBLE/VISUALS	75cd		10	0.000	0.000	0.148	1.480
VISUALS	15/75cd		19	0.000	0.000	0.066	1.250
VISUALS	75cd		2	0.000	0.000	0.123	0.246
VISUALS	110cd		1	0.000	0.000	0.140	0.140
MINI-HORN			1	0.000	0.000	0.012	0.012
HORN			12	0.000	0.000	0.023	0.276
SUB-TOTAL AMPERES				0.400 AMPS		4.779 AMPS	
				x 24 HOURS		x 0.084 HOURS	
SUB-TOTAL AMPERE-HOURS				9.6072 A.H.		0.402 A.H.	
TOTAL REQUIRED AMPERE-HOURS FOR:						10.009 A.H.	
BATTERY NON-LINEAR DISCHARGE CHARACTERISTIC FACTOR						x 1.2	
TOTAL MINIMUM AMPERE HOURS REQUIRED						10.805 A.H.	
PROVIDED BATTERY CAPACITY						12 A.H.	

FIRE ALARM VOLTAGE DROP CALCULATIONS — MASTER PANEL

DEVICE NUMBER	UNIT AMPERES	TOTAL AMPERES	WIRE LENGTH	AWG SIZE	CIRC. MILS	OHMS RES. PER/FT.	VOLT DROP	PERCENT DROP
1	0.066	0.656	15'	#12	6530	0.00164	0.0322	0.134
2	0.023	0.590	6'	#12	6530	0.00164	0.0116	0.048
3	0.066	0.567	10'	#12	6530	0.00164	0.0185	0.077
4	0.066	0.501	17'	#12	6530	0.00164	0.0279	0.116
5	0.148	0.435	44'	#12	6530	0.00164	0.0626	0.261
6	0.066	0.287	26'	#12	6530	0.00164	0.0244	0.102
7	0.023	0.221	38'	#12	6530	0.00164	0.0275	0.114
8	0.066	0.198	9'	#12	6530	0.00164	0.0058	0.024
9	0.066	0.132	9'	#12	6530	0.00164	0.0039	0.016
10	0.066	0.066	9'	#12	6530	0.00164	0.0019	0.008
ANNUNCIATION CIRCUIT	FIRE ALARM MASTER PANEL- 'A1'		TOTAL VOLTAGE DROP:					0.165
			TOTAL PERCENTAGE DROP IN CIRCUIT:					0.687%
BASED UPON A 24 VDC CIRCUIT OPERATING AT 70 DEGREES FARENHEIT								

FIRE ALARM VOLTAGE DROP CALCULATIONS — MASTER PANEL

DEVICE NUMBER	UNIT AMPERES	TOTAL AMPERES	WIRE LENGTH	AWG SIZE	CIRC. MILS	OHMS RES. PER/FT.	VOLT DROP	PERCENT DROP
1	0.123	1.977	84'	#12	6530	0.00164	0.4183	1.743
2	0.066	1.854	21'	#12	6530	0.00164	0.0981	0.409
3	0.066	1.722	13'	#12	6530	0.00164	0.0585	0.244
4	0.066	1.656	9'	#12	6530	0.00164	0.0390	0.163
5	0.023	1.590	13'	#12	6530	0.00164	0.0542	0.226
6	0.140	1.567	24'	#12	6530	0.00164	0.0987	0.411
7	0.066	1.493	12'	#12	6530	0.00164	0.0451	0.188
8	0.148	1.427	12'	#12	6530	0.00164	0.0431	0.180
9	0.066	1.279	15'	#12	6530	0.00164	0.0483	0.201
10	0.023	1.213	5'	#12	6530	0.00164	0.0153	0.064
11	0.165	1.190	53'	#12	6530	0.00164	1.589	0.662
12	0.165	1.025	49'	#12	6530	0.00164	0.1265	0.527
13	0.140	0.860	41'	#12	6530	0.00164	0.0888	0.320
14	0.066	0.720	27'	#12	6530	0.00164	0.0490	0.204
15	0.148	0.654	25'	#12	6530	0.00164	0.0412	0.172
16	0.023	0.506	27'	#12	6530	0.00164	0.0344	0.143
17	0.148	0.483	31'	#12	6530	0.00164	0.0377	0.157
18	0.066	0.335	21'	#12	6530	0.00164	0.0177	0.074
19	0.023	0.269	9'	#12	6530	0.00164	0.0061	0.025
20	0.123	0.246	55'	#12	6530	0.00164	0.0341	0.142
21	0.123	0.123	30'	#12	6530	0.00164	0.0093	0.039
ANNUNCIATION CIRCUIT	FIRE ALARM MASTER PANEL- 'A2'		TOTAL VOLTAGE DROP:					1.522
			TOTAL PERCENTAGE DROP IN CIRCUIT:					6.343%
BASED UPON A 24 VDC CIRCUIT OPERATING AT 70 DEGREES FARENHEIT								

FIRE ALARM VOLTAGE DROP CALCULATIONS — MASTER PANEL

DEVICE NUMBER	UNIT AMPERES	TOTAL AMPERES	WIRE LENGTH	AWG SIZE	CIRC. MILS	OHMS RES. PER/FT.	VOLT DROP	PERCENT DROP
1	0.023	1.025	194'	#12	6530	0.00164	0.6503	2.710
2	0.066	1.002	19'	#12	6530	0.00164	0.0623	0.259
3	0.066	0.936	19'	#12	6530	0.00164	0.0582	0.242
4	0.023	0.870	37'	#12	6530	0.00164	0.1053	0.439
5	0.148	0.847	26'	#12	6530	0.00164	0.0720	0.300
6	0.148	0.699	45'	#12	6530	0.00164	0.1029	0.429
7	0.066	0.551	7'	#12	6530	0.00164	0.0126	0.053
8	0.165	0.485	17'	#12	6530	0.00164	0.0270	0.112
9	0.023	0.320	43'	#12	6530	0.00164	0.0450	0.188
10	0.165	0.297	49'	#12	6530	0.00164	0.0476	0.198
11	0.066	0.132	11'	#12	6530	0.00164	0.0047	0.020
12	0.066	0.066	27'	#12	6530	0.00164	0.0058	0.024
ANNUNCIATION CIRCUIT	FIRE ALARM MASTER PANEL- 'A3'		TOTAL VOLTAGE DROP:					0.840
			TOTAL PERCENTAGE DROP IN CIRCUIT:					3.499%
BASED UPON A 24 VDC CIRCUIT OPERATING AT 70 DEGREES FARENHEIT								

FIRE ALARM VOLTAGE DROP CALCULATIONS — MASTER PANEL

DEVICE NUMBER	UNIT AMPERES	TOTAL AMPERES	WIRE LENGTH	AWG SIZE	CIRC. MILS	OHMS RES. PER/FT.	VOLT DROP	PERCENT DROP
1	0.023	0.875	265'	#12	6530	0.00164	0.7583	3.160
2	0.023	0.852	40'	#12	6530	0.00164	0.1115	0.464
3	0.148	0.829	40'	#12	6530	0.00164	0.1084	0.452
4	0.148	0.681	5'	#12	6530	0.00164	0.0111	0.046
5	0.066	0.533	50'	#12	6530	0.00164	0.0872	0.363
6	0.023	0.467	42'	#12	6530	0.00164	0.0641	0.267
7	0.148	0.144	36'	#12	6530	0.00164	0.0523	0.218
8	0.148	0.296	81'	#12	6530	0.00164	0.0784	0.327
9	0.148	0.148	41'	#12	6530	0.00164	0.0198	0.083
ANNUNCIATION CIRCUIT	FIRE ALARM MASTER PANEL- 'A4'		TOTAL VOLTAGE DROP:					1.366
			TOTAL PERCENTAGE DROP IN CIRCUIT:					5.692%
BASED UPON A 24 VDC CIRCUIT OPERATING AT 70 DEGREES FARENHEIT								

WATERS ENGINEERING
CONSULTING ELECTRICAL ENGINEER
3200 South Fairway Suite B
Visalia, California 93277
Telephone (559) 733-4733
Facsimile (559) 733-4755
Vincent W. Waters, P.E. #E014975

REGISTERED PROFESSIONAL ENGINEER VINCENT W. WATERS No. E 14975 Exp. 6/30/03 ELECTRICAL STATE OF CALIFORNIA

IDENTIFICATION STAMP
DIV OF THE STATE ARCHITECT
OFFICE OF REGULATION SERVICES
APPL #03-106456
FILE 15-6
AC ✓ FLS [illegible] SS [illegible]
DATE 12/17/02

Project:

BAKERSFIELD CITY SCHOOL DISTRICT

WASHINGTON JUNIOR HIGH SCHOOL

FIRE ALARM SYSTEM REPLACEMENT

Bakersfield, California

CAD INDEMNIFICATION CLAUSE
THE COMPUTER GENERATED CAD DRAWING FILES PREPARED BY THE ELECTRICAL ENGINEER FOR THIS PROJECT ARE INSTRUMENTS OF THE ELECTRICAL ENGINEER'S SERVICE SOLELY IN CONNECTION WITH THIS PROJECT. DURING THE COURSE OF IMPLEMENTATION OF THIS PROJECT, AND ONLY WITH THE PRIOR WRITTEN CONSENT OF THE ELECTRICAL ENGINEER, OTHERS MAY BE PERMITTED TO VIEW THE CAD DRAWING FILES FOR THE PURPOSE OF INFORMATION AND/OR REFERENCE ONLY. THESE CAD DRAWING FILES SHALL NOT BE USED ON ANY PROJECT OTHER THAN THIS PROJECT, FOR ANY UNAUTHORIZED ADDITIONS TO THIS PROJECT, OR FOR COMPLETION OF THIS PROJECT BY OTHERS. ANY INTENTIONAL REVISIONS, ADDITIONS OR DELETIONS MADE TO THESE CAD DRAWING FILES SHALL BE MADE AT THE FULL RISK OF THE PERSON(S) WHO SHALL KNOWINGLY MAKE SUCH REVISIONS, ADDITIONS OR DELETIONS, AND SUCH PERSON(S) SHALL HOLD HARMLESS AND INDEMNIFY THE ELECTRICAL ENGINEER OF ANY AND ALL RESPONSIBILITIES AND/OR LIABILITIES ATTENDANT TO SUCH REVISIONS, ADDITIONS OR DELETIONS.

DRAWN BY:	DAJ/JLD
CHECKED BY:	RTS
APPROVED BY:	VWW
PROJECT NUMBER:	2002-21A
FILE NAME:	2002-21A-E5.DWG
DATE:	07/19/02

SHEET TITLE:
FIRE ALARM SYSTEM PLAN NOTES AND SINGLE LINE DIAGRAM

SHEET
E-5
OF 6 SHEETS