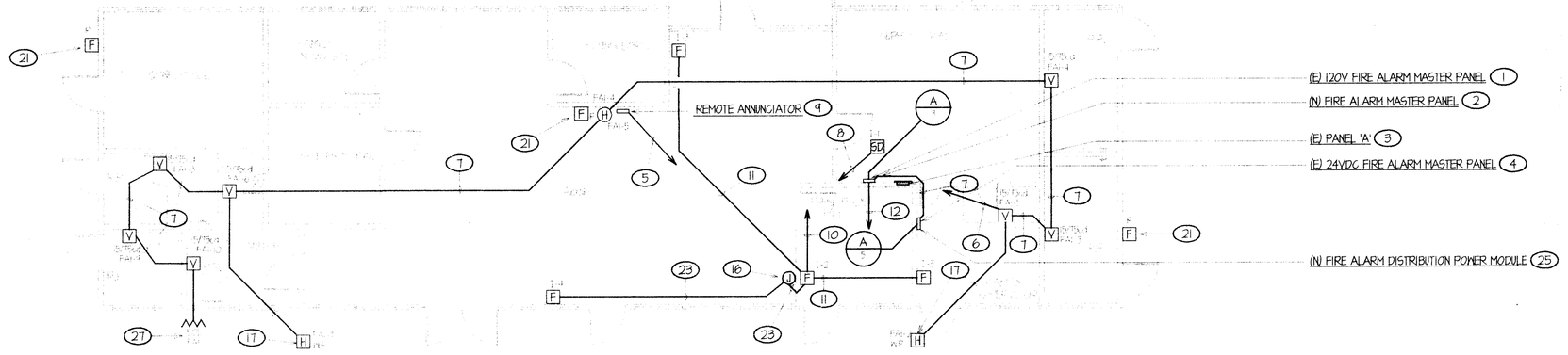

BUILDING 'A'

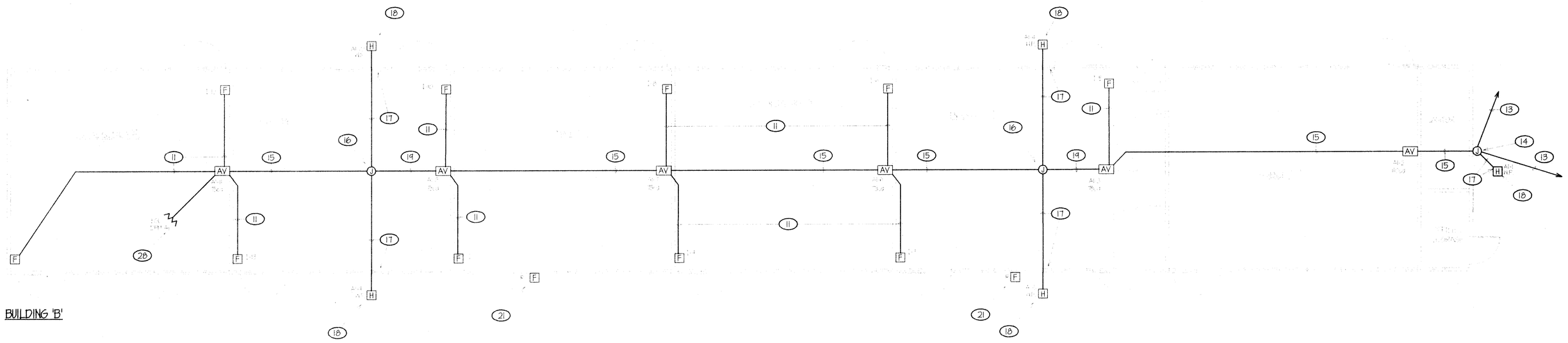

BUILDING 'B'

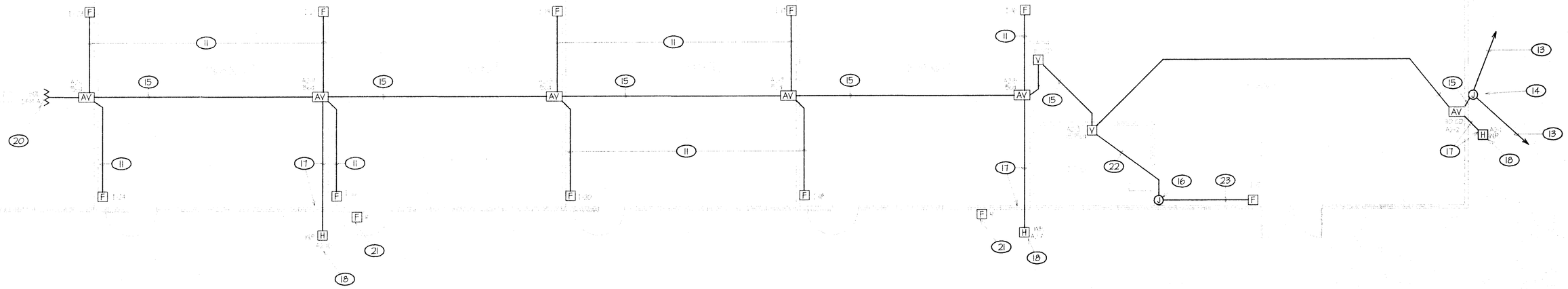

BUILDING C

FIRE ALARM SYSTEM PLAN-BUILDING 'A', 'B', 'C' 29

1/8" = 1'-0"

FIRE ALARM SYSTEM PLAN NOTES

1. EXISTING 120V FIRE ALARM PANEL, INSTALLED UNDER D.S.A. APPLICATION #A51541 TO BE REMOVED COMPLETE AND REPLACED WITH NEW 24V DC FIRE ALARM MASTER PANEL, ITEM 2 BELOW. DE-ENERGIZE MAIN AND BRANCH CIRCUIT BREAKERS, DISCONNECT BRANCH CIRCUIT CONDUCTORS AND PULL OUT COMPLETE. REMOVE ANY OVERHEAD BRANCH CIRCUIT CONDUIT COMPLETE. REFER TO GENERAL NOTES, SHEET E-0 AND FIRE ALARM SINGLE LINE DIAGRAM, I/E-5 FOR COORDINATION/ REFERENCE.
2. PROVIDE NEW FIRE ALARM MASTER CONTROL PANEL PER SPECIFICATIONS, INSTALL PER 5/E-5 AND CONNECT PER FIRE ALARM SINGLE LINE DIAGRAM, I/E-5.
3. EXISTING 208Y/120V, 3ph, 4W, PANEL TO REMAIN. CIRCUIT BREAKERS #3 AND #5 ARE DEDICATED TO EXISTING FIRE ALARM PANEL(S). REUSE 20/1 CIRCUIT BREAKER #3 AND CONNECT FIRE ALARM PANEL POWER PER MANUFACTURER'S WRITTEN INSTRUCTIONS AND PROVIDE DISCONNECT LOCATION LABELING PER NFPA 72, 1-5.25.2. REUSE 20/1 CIRCUIT BREAKER #5 AND CONNECT FIRE ALARM DISTRIBUTED POWER MODULE POWER PER MANUFACTURER'S WRITTEN INSTRUCTIONS AND PROVIDE DISCONNECT LOCATION LABELING PER NFPA 72, 1-5.25.2.
4. EXISTING 24VDC FIRE ALARM PANEL, CURRENTLY SERVING RELOCATABLE CLASSROOMS TO BE REMOVED COMPLETE AND REPLACED WITH NEW DISTRIBUTED POWER MODULE, ITEM 25 BELOW. DISCONNECT BRANCH CIRCUIT CONDUCTORS AND PULL OUT COMPLETE. REMOVE ANY EXPOSED, EMPTY CONDUIT COMPLETE. REFER TO GENERAL NOTES, SHEET E-0 AND FIRE ALARM SINGLE LINE DIAGRAM, I/E-5 FOR COORDINATION/ REFERENCE.
5. RUN SURFACE METAL RACEWAY (WIREMOLD V700 SERIES OR EQUAL) WITH WIRING/CABLING PER MANUFACTURER'S RECOMMENDATION UP WALL TO CEILING. CONVERT TO 1/2"C. WITH WIRING/CABLING PER MANUFACTURER'S RECOMMENDATION IN ACCESSIBLE ATTIC SPACE AND RUN TO FIRE ALARM MASTER PANEL LOCATED IN SUPPLY ROOM, BUILDING 'A'. REFER TO 4/E-5 FOR COORDINATION/REFERENCE.
6. RUN SURFACE METAL RACEWAY (WIREMOLD V700 SERIES OR EQUAL) 2 #12 CU THWN (ANNUNCIATION) UP WALL FROM DEVICE TO CEILING. CONVERT TO 1/2"C. 4 #12 CU THWN (ANNUNCIATION) IN ACCESSIBLE ATTIC SPACE AND RUN TO FIRE ALARM MASTER PANEL LOCATED IN SUPPLY ROOM, BUILDING 'A' PER ITEM 12 BELOW. REFER TO 4/E-5 FOR COORDINATION/REFERENCE.
7. 1/2"C., 2 #12 CU THWN (ANNUNCIATION) IN ACCESSIBLE ATTIC SPACE. CONVERT TO SURFACE METAL RACEWAY (WIREMOLD V700 SERIES OR EQUAL) ABOVE CEILING IN ACCESSIBLE ATTIC SPACE AT EACH FIRE ALARM ANNUNCIATION DEVICE, THEN RUN SURFACE METAL RACEWAY 4 #12 CU THWN (ANNUNCIATION) TO FIRE ALARM ANNUNCIATION DEVICE. REFER TO 4/E-5 FOR COORDINATION/REFERENCE.
8. CEILING MOUNT SMOKE DETECTOR WITHIN 5'-0" OF FIRE ALARM MASTER PANEL. RUN SURFACE METAL RACEWAY (WIREMOLD V700 SERIES OR EQUAL) ONE 1" CABLE (INITIATION) ALONG CEILING TO FIRE ALARM MASTER PANEL LOCATED IN SUPPLY ROOM, BUILDING 'A'. REFER TO 4/E-5 FOR COORDINATION/REFERENCE.
9. PROVIDE FIRE ALARM REMOTE ANNUNCIATOR PER SPECIFICATIONS. REFER TO FIRE ALARM SINGLE LINE DIAGRAM, SHEET E-5 FOR COORDINATION/REFERENCE.
10. RUN SURFACE METAL RACEWAY (WIREMOLD V700 SERIES OR EQUAL) ONE 1" CABLE (INITIATION) UP WALL TO CEILING. CONVERT TO 1/2"C. ONE 1" CABLE (INITIATION) IN ACCESSIBLE ATTIC SPACE TO FIRE ALARM MASTER PANEL LOCATED IN SUPPLY ROOM, BUILDING 'A' PER ITEM 12 BELOW. REFER TO 4/E-5 FOR COORDINATION/REFERENCE.
11. 1/2"C., ONE 1" CABLE (INITIATION) IN ACCESSIBLE ATTIC SPACE. CONVERT TO SURFACE METAL RACEWAY (WIREMOLD V700 SERIES OR EQUAL) ABOVE CEILING IN ACCESSIBLE ATTIC SPACE AT EACH FIRE ALARM INITIATION DEVICE, THEN RUN SURFACE METAL RACEWAY ONE 1" CABLE (INITIATION) TO FIRE ALARM INITIATION DEVICE. REFER TO 4/E-5 FOR COORDINATION/REFERENCE.
12. EXIT FIRE ALARM MASTER PANEL WITH SURFACE METAL RACEWAY (WIREMOLD 64000 SERIES OR EQUAL) WITH 3 #12 CU THWN (ANNUNCIATION), ONE 1" CABLE (INITIATION) TO CEILING. CONVERT TO SURFACE METAL RACEWAY SERVICE ENTRANCE FITTING, THEN EXIT BUILDING VIA 2"C. TO TOP OF COVERED WALKWAY AND DISTRIBUTE AS SHOWN. REFER TO FIRE ALARM SITE ELECTRICAL PLAN, SHEET E-1 FOR COORDINATION/REFERENCE
13. REFER TO SITE FIRE ALARM SYSTEM PLAN FOR FEEDER CONTINUATION ON COVERED WALKWAY AND COORDINATION/ REFERENCE.
14. WP, 6" x 6" x 4" NEMA 3R SCREW COVER ENCLOSURE FOR BUILDING FIRE ALARM BRANCH CIRCUIT EXTENSION. REFER TO SITE FIRE ALARM SYSTEM PLAN FOR COORDINATION/REFERENCE.
15. 1/2"C., 2 #12 CU THWN (ANNUNCIATION), ONE 1" CABLE (INITIATION) IN ACCESSIBLE ATTIC SPACE. CONVERT TO SURFACE METAL RACEWAY (WIREMOLD V700 SERIES OR EQUAL) WHEN EXITING CEILING IN ACCESSIBLE ATTIC SPACE AT EACH FIRE ALARM ANNUNCIATION DEVICE, THEN RUN SURFACE METAL RACEWAY 4 #12 CU THWN (ANNUNCIATION) TO FIRE ALARM DEVICE. REFER TO 4/E-5 FOR COORDINATION/REFERENCE.
16. 4S JUNCTION BOX MOUNTED IN ACCESSIBLE ATTIC SPACE. RUN 1/2" CONDUIT IN ACCESSIBLE ATTIC SPACE TO T-BAR CEILING, THEN CONVERT TO SURFACE METAL RACEWAY AT T-BAR CEILING AND EXTEND TO FIRE ALARM DEVICE ON INTERIOR WALL. REFER TO 4/E-5 FOR COORDINATION/REFERENCE.
17. 1/2"C., 4 #12 CU THWN (ANNUNCIATION) CONCEALED IN ATTIC AND EXTERIOR SOFFIT STRUCTURE AS REQUIRED.
18. EXTERIOR WP. AUDIBLE DEVICE MOUNTED IN SOFFIT OF CORRIDOR.
19. 1/2"C., 2 #12 CU THWN (ANNUNCIATION), ONE 1" CABLE (INITIATION) IN ACCESSIBLE ATTIC SPACE.
20. END OF LINE RESISTOR FOR ANNUNCIATION CIRCUIT 'DPM-A3' MOUNTED AT THIS DEVICE.
21. EXISTING DEVICE, DENOTED WITH SUBSCRIPT 'R', TO BE REMOVED FROM WALL THAT IS TO REMAIN. PULL OUT WIRING MADE IDLE BY DEVICE REMOVAL COMPLETE TO EXISTING FIRE ALARM CONTROL PANEL. PROVIDE AND INSTALL APPROPRIATE BLANK COVER PLATE TO EXISTING FLUSH BACK BOX THAT IS TO BE ABANDONED IN PLACE. REMOVE ANY EMPTY, EXPOSED JUNCTION BOX(ES) AND/OR CONDUIT COMPLETE. PAINT COVER PLATE TO MATCH EXISTING SURFACE. CONTRACTOR SHALL FIELD VERIFY. REFER TO FIRE ALARM INSTALLATION SEQUENCE AND SCHEDULING NOT E, SHEET E-0 FOR COORDINATION/REFERENCE.
22. RUN 1/2"C. ONE 1" CABLE (INITIATION) IN ACCESSIBLE ATTIC SPACE TO JUNCTION BOX MOUNTED IN ACCESSIBLE ATTIC SPACE (ITEM 16 ABOVE).
23. CONVERT TO SURFACE METAL RACEWAY (WIREMOLD V700 SERIES OR EQUAL) ABOVE CEILING IN ACCESSIBLE ATTIC SPACE AND RUN SURFACE METAL RACEWAY ONE 1" CABLE (INITIATION) ALONG WALL TO SURFACE MOUNTED FIRE ALARM INITIATION DEVICE. REFER TO 4/E-5 FOR COORDINATION/REFERENCE.
24. 4S JUNCTION BOX MOUNTED IN ACCESSIBLE ATTIC SPACE.
25. PROVIDE NEW DISTRIBUTED POWER MODULE PER SPECIFICATIONS, INSTALL PER 5/E-5 AND CONNECT PER FIRE ALARM SINGLE LINE DIAGRAM, I/E-5.
26. 3/4"C. 10 #12 CU THWN (ANNUNCIATION).
27. END OF LINE RESISTOR FOR ANNUNCIATION CIRCUIT 'FA1' MOUNTED AT THIS DEVICE.
28. END OF LINE RESISTOR FOR ANNUNCIATION CIRCUIT 'DPM-A1' MOUNTED AT THIS DEVICE.
29. PER BAKERSFIELD CITY SCHOOL DISTRICT DIRECTIONS: ALL CONDUIT RUN ON TOP OF COVERED WALKWAY AND IN ACCESSIBLE ATTIC SHALL BE OF TYPE EMT. ALL FIRE ALARM DEVICES LOCATED INSIDE OF BUILDING SHALL BE SURFACE MOUNTED. ALL INTERIOR RUNS INSIDE BUILDING THAT ARE EXPOSED, ALONG WALL OR FROM DEVICE TO CEILING, SHALL UTILIZE A SURFACE METAL RACEWAY SYSTEM (WIREMOLD V700 SERIES, OR EQUAL). SURFACE METAL RACEWAY SHALL BE CONVERTED TO EMT CONDUIT ABOVE CEILING IN ACCESSIBLE ATTIC SPACE. REFER TO 4/E-5 FOR COORDINATION/REFERENCE. NO SURFACE CONDUIT INSIDE BUILDINGS WILL BE ALLOWED.

FIRE ALARM APPROVAL

THE FIRE ALARM SYSTEM DESIGN IS A COMPLETE PLAN SUBMITTAL PER DSA-ORS POLICY. THE CONTRACTOR SHALL INSTALL THE MANUAL, ADDRESSABLE FIRE PROTECTION SYSTEM AS SHOWN AND AS HEREIN SPECIFIED. IF ANY SUBSTITUTION OF FIRE ALARM EQUIPMENT IS TO BE REQUESTED, SUCH REQUEST SHALL BE MADE A MINIMUM OF TEN BUSINESS DAYS PRIOR TO PROJECT BID DATE. THE CONTRACTOR SUBMITTAL SHALL INCLUDE ALL MANUFACTURER'S CATALOG EQUIPMENT SPECIFICATION SHEETS, THE CSFM LISTING SHEETS FOR INDIVIDUAL COMPONENTS COMPRISING THE SUBSTITUTED FIRE ALARM SYSTEM, BATTERY LOAD CALCULATIONS AND VOLTAGE DROP CALCULATIONS FOR EACH SIGNALLING CIRCUIT. SHOULD THE SUBSTITUTED SYSTEM BE APPROVED AND INSTALLED, THE CONTRACTOR SHALL PROVIDE ONE SET OF REPRODUCIBLE, CAD GENERATED, DSA-ORS APPROVED AND STAMPED 'AS-CONSTRUCTED' DRAWINGS TO THE ENGINEER UPON COMPLETION OF THE SYSTEM INSTALLATION.

WATERS ENGINEERING
CONSULTING ELECTRICAL ENGINEER
3200 South Fairway, Suite B
Visalia, California 93277
Telephone (559) 733-4733
Facsimile (559) 733-4755
Vincent W. Waters, P.E. #E014475

REGISTERED PROFESSIONAL ENGINEER VINCENT W. WATERS No. E 14975 Exp. 6/30/03 ELECTRICAL STATE OF CALIFORNIA

IDENTIFICATION STAMP
DIV OF THE STATE ARCHITECT
OFFICE OF REGULATION SERVICES
APPL #03-106456
FILE 15-6
AC ✓ FLS ✓ SS
DATE 12/17/02

Project:

BAKERSFIELD CITY SCHOOL DISTRICT
WASHINGTON JUNIOR HIGH SCHOOL
FIRE ALARM SYSTEM REPLACEMENT
Bakersfield, California

CAD INDEMNIFICATION CLAUSE
THE COMPUTER GENERATED CAD DRAWING FILES PREPARED BY THE ELECTRICAL ENGINEER FOR THIS PROJECT ARE INSTRUMENTS OF THE ELECTRICAL ENGINEER'S SERVICE SOLELY IN CONNECTION WITH THIS PROJECT. DURING THE COURSE OF FIELD EDITATION OF THIS PROJECT, AND ONLY WITH THE PRIOR WRITTEN CONSENT OF THE ELECTRICAL ENGINEER, OTHERS MAY BE PERMITTED TO VIEW THE CAD DRAWING FILES FOR THE PURPOSE OF INFORMATION AND/OR REFERENCE ONLY. THESE CAD DRAWING FILES SHALL NOT BE USED ON ANY WAY BUT OTHER THAN THIS PROJECT FOR ANY UNAUTHORIZED ADDITIONS TO THIS PROJECT OR FOR COMPLETION OF THIS PROJECT BY OTHERS. ANY INTENTIONAL REVISIONS, ADDITIONS OR DELETIONS MADE TO THESE CAD DRAWING FILES SHALL BE MADE AT THE FULL RISK OF THE PERSON(S) WHO SHALL INDEMNIFY, MAKE SUCH REVISIONS, ADDITIONS OR DELETIONS, AND SUCH PERSON(S) SHALL HOLD HARMLESS AND INDEMNIFY THE ELECTRICAL ENGINEER OF ANY AND ALL RESPONSIBILITIES AND/OR LIABILITIES ATTENDANT TO SUCH REVISIONS, ADDITIONS OR DELETIONS.

DRAWN BY:	DAJ/LLD
CHECKED BY:	RTS
APPROVED BY:	VWW
PROJECT NUMBER:	2002-21A
FILE NAME:	2002-21A-E2.DWG
DATE:	11/14/02

SHEET TITLE:
FIRE ALARM SYSTEM PLAN-BUILDINGS 'A', 'B', 'C'

SHEET
E-2
OF 6 SHEETS

X:\2002\02202-2\02202-2A\02202-2A-E3.DWG LLD\DAJ 11/14/02