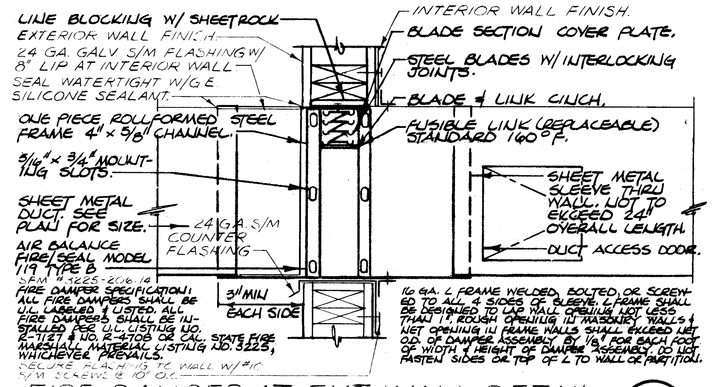

FIRE DAMPER AT EXT WALL DETAIL (A / MP-5)

SCALE: NONE

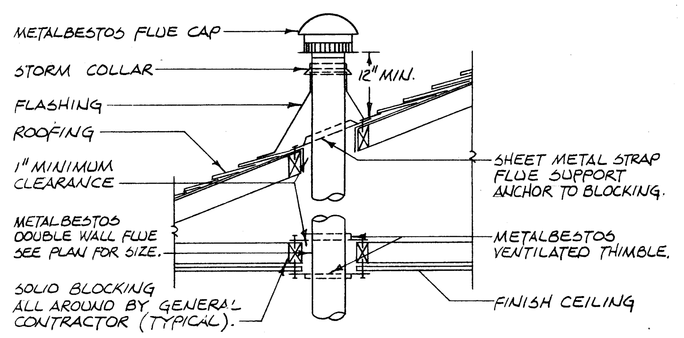

FLUE THRU ROOF DETAIL (B / MP-5)

SCALE: NONE

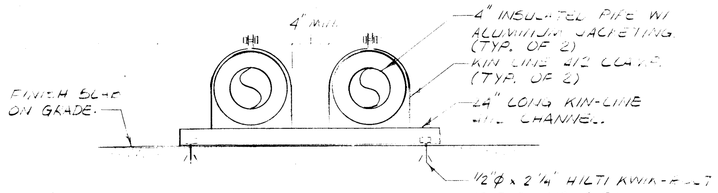

PIPE SUPPORT ON SLAB (C / MP-5)

SCALE: NONE

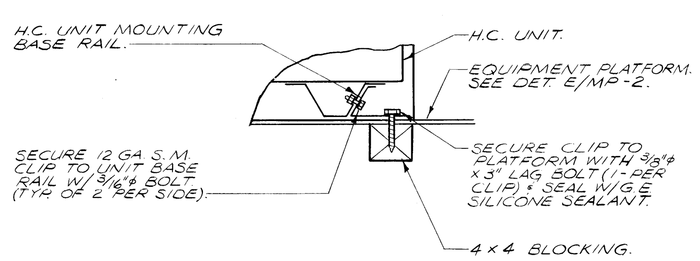

HC-1 MOUNTING DETAIL (D / MP-5)

SCALE: NONE

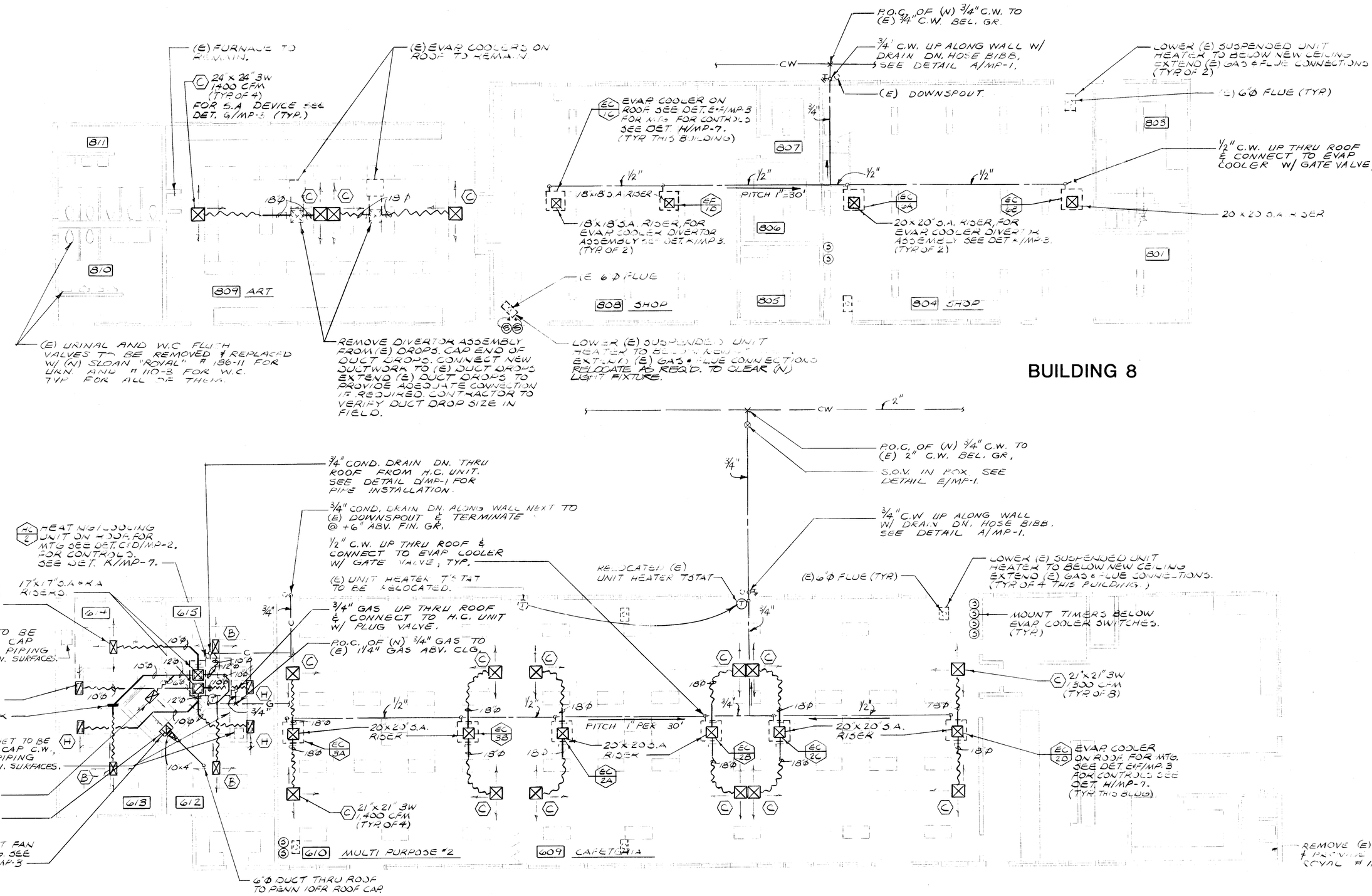

BUILDING 8

BUILDING 6

AIR CONDITIONING AND PLUMBING PLAN

SCALE: 1/8" = 1'-0"

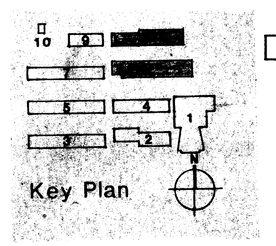

approved

Donald R. Lawrence & Associates
CONSULTING MECHANICAL ENGINEERS
1300 W. Shaw Ave., Suite 2B Fresno, CA 93711
(209) 226-0101 ME11064

C-1128
C-3269
C-3132
✱ C-6564

DAVID J. GETTHAL

biggar frapwell ghezzi cartnal
architects planners
311 south real road box 9698
bakersfield california 93309
805 832 8122
© copyright 1980

AIR CONDITIONING & PLUMBING PLANS BLDGS 6 & 8

BLAIR LEARNING CENTER RECONSTRUCTION

900 belle terrace, bakersfield, california

job 88-102

date 3 OCT 1990

sheet MP-5

bfgc biggar frapwell ghezzi cartnal