PLUMBING FIXTURE AND EQUIPMENT SCHEDULE						
		CONNECTION SIZES				
MARK	FIXTURE	S OR W	V.	C.W.	H.W.	DESCRIPTION
WC-1	WATER CLOSET	4"	2"	1"	-	AMERICAN STANDARD #2221.018 "ELONGATED WATER-SAVER MADERA" W/SLOAN ROYAL #110-3 FLUSH VALVE AND OLSONITE #L-310CC OPEN-FRONT 3" HIGH LIFT SEAT.
WCS-1	WATER CLOSET SEAT	-	-	-	-	OLSONITE #L-310CC, 3" HIGH OPEN FRONT LIFT SEAT.
S-1	SINK	2"	1-1/2"	1/2"	1/2"	KOHLER "GLEN FALLS" #K-6757, 24" X 21" X 13" DEEP ENAMELED CAST IRON WITH #K-8801 STRAINER, STAINLESS STEEL MOUNTING RIM, AND CHICAGO #527 SWING SPOUT FAUCET. SEE NOTE BEL
S-2	CLASSROOM SINK	2"	1-1/2"	1/2"	1/2"	HAWS #4120, 30" X 20" ENAMELED CAST IRON W/CHICAGO #50-E3 PANTRY FAUCET @ LEFT REAR, CHICAGO #748-335 DRINKING BUBBLER @ RIGHT FRONT, STAINLESS STEEL RIM AND #6455 SINK STRAINER.
BT-1	BATHTUB	2"	1-1/2"	1/2"	1/2"	AMERICAN STANDARD "SPECTRA" #2607.109 LEFT OUTLET, 60" X 32" ENAMELED CAST IRON W/PRICE-PFISTER SERIES #19 WASTE AND OVERFLOW, AND POWERS #T425-D-0-0-R-0-0 THERMOSTATIC SHOWER VALVE W/ANGLE CHECK-STOPS, AND TUB SPOUT.
EDF-1	ELECTRIC DRINKING FOUNTAIN	2"	1-1/2"	1/2"	-	HAWS #HWC70-S WALL-MOUNT W/STAINLESS STEEL CABINET FOR 10.3 GPH OF 50 DEG. F. WATER, AND JAY R. SMITH #800 CARRIER. ELECTRICAL REQ: 1/5 HP., 120 V/SINGLE PHASE.
WH-1	WATER HEATER	-	-	3/4"	3/4"	A.O. SMITH #ELS-15, 15 GALLON STORAGE CAPACITY, W/ONE 1500 WATT, 120V/SINGLE PHASE ELEMENT AND WITH 3/4" P & T RELIEF VALVE. OPERATING WEIGHT = 180 LBS.
F-1	FAUCET	-	-	1/2"	-	CHICAGO #335-E12 "TIP-TAP" SLOW CLOSING FAUCET INDEXED FOR COLD WATER. ADJUST FAUCET TO STAY OPEN FOR 10 SECONDS.
HB-1	HOSE BIBB	—	—	3/4"	—	ACORN # B121 ROUGH BRONZE W/ VANDAL-PROOF LOCKSHIELD, VACUUM BREAKER AND REMOVABLE HANDLE.
WH-2	WATER HEATER	—	—	1/2"	1/2"	I.T.S. # MDT SERIES, WITH 4 KW 240 V/ 3 PHASE ELEMENT.

NOTE; FOR EACH SINK, S-1 PROVIDE THE FOLLOWING: POWERS # T425-D-0-0-0-5-0 THERMOSTATIC MIXING VALVE W/ ANGLE CHECKSTOPS, HAND HELD SHOWERHEAD W/ TWIN WALL HOOKS, AND # 141-319 IN-LINE VACUUM BREAKER. SEE ARCH. INTERIOR ELEVATIONS FOR LOCATION OF UNIT.

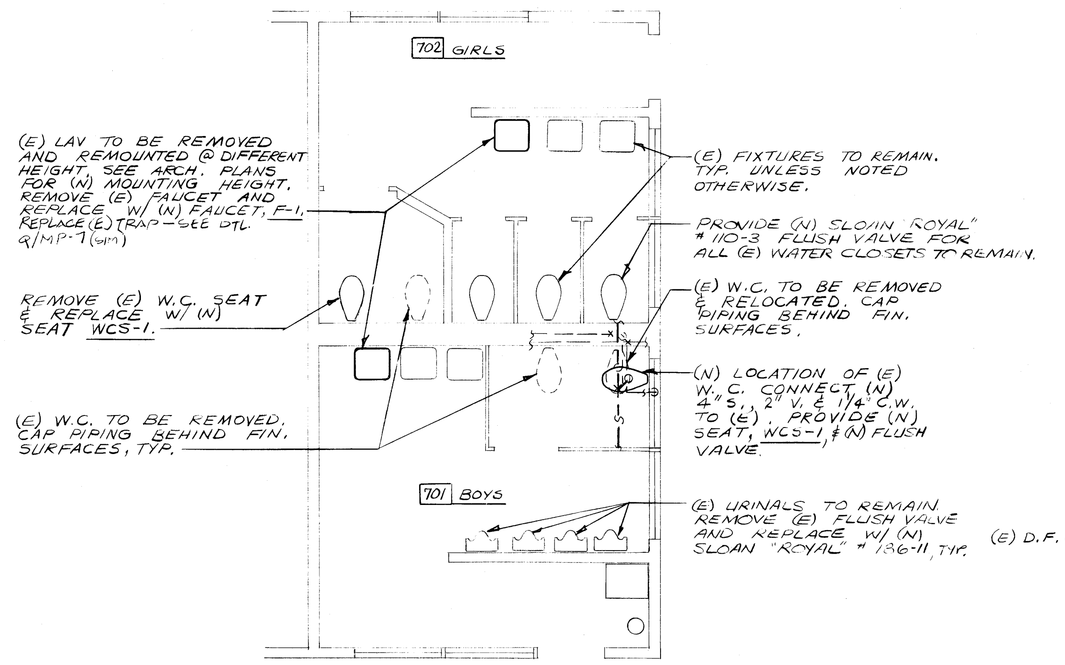

BUILDING 7
TOILET ROOM PLUMBING DETAIL (B / MP-1)
SCALE : 1/4" = 1'-0"

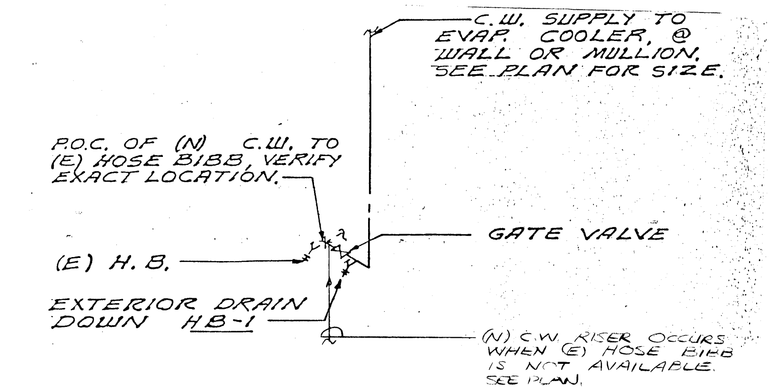

DRAIN DOWN DETAIL (A / MP-1)
SCALE : NONE

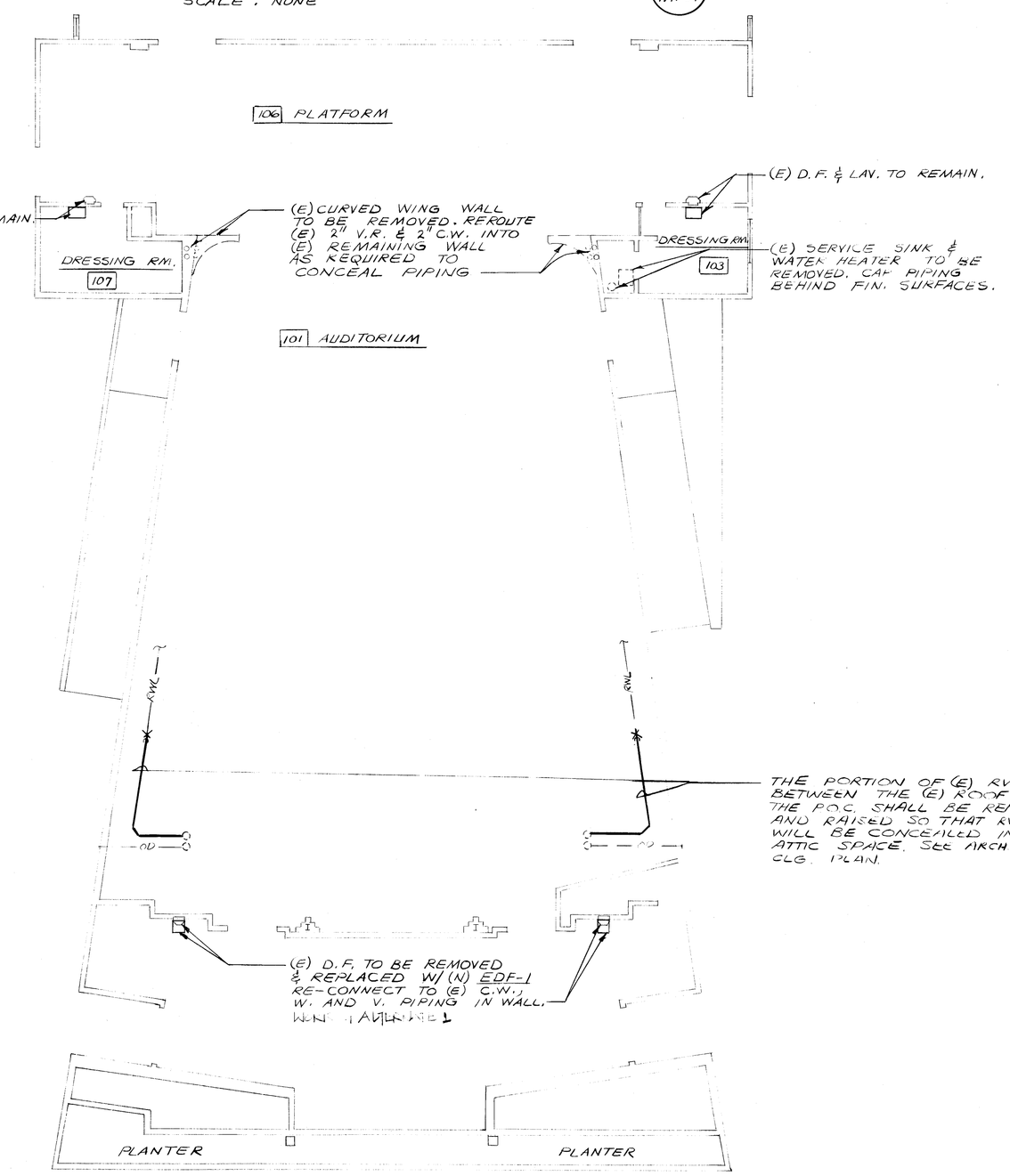

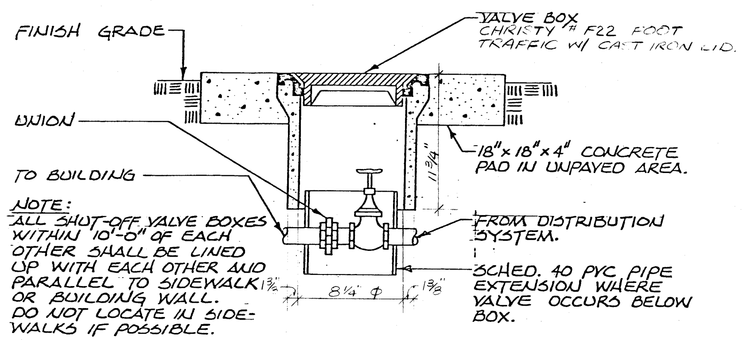

SHUT-OFF VALVE IN BOX DETAIL (E / MP-1)
SCALE : NONE

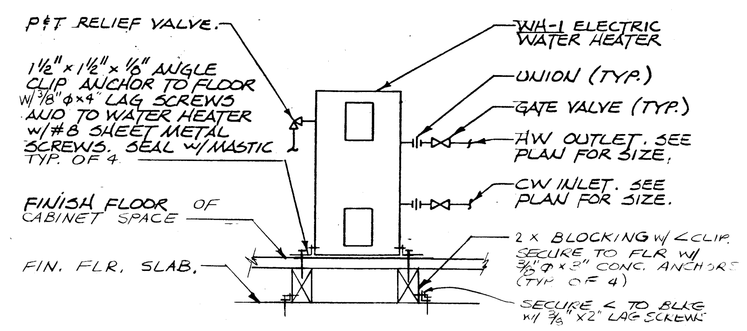

WATER HEATER DETAIL (C / MP-1)
SCALE : NONE

PLUMBING LEGEND		
SYMBOL	ITEM	ABBR
	SOIL OR WASTE	S or W
	VENT	V
	VENT RISER	VR
	VENT THROUGH ROOF	VTR
	DOMESTIC COLD WATER	CW
	DOMESTIC HOT WATER	HW
	DOMESTIC HOT WATER RETURN	HWR
G	NATURAL GAS	G
C	CONDENSATE DRAIN	CD
	EXISTING PIPING	
	FLOOR CLEANOUT	FCO
	CLEANOUT TO GRADE	COTG
	WALL CLEANOUT	WCO
	PIPING TURN UP	
	PIPING TURN DOWN	
	POINT OF CONNECTION	POC
(N)	NEW	
(E)	EXISTING	
	ABOVE CEILING	ABV. CLG.
	BELOW FLOOR	BEL. FLR.
	BELOW GRADE	BEL. GR.
	TYPICAL	TYP.
	CONTINUATION	CONT.
	SHUT-OFF VALVE IN BOX	SOV
	GATE VALVE	
	CHECK VALVE	
	PLUG VALVE	

NOTES:
1. PLUMBING CONTRACTOR TO VERIFY EXACT LOCATION AND DEPTH OF POINTS OF CONNECTION TO EXISTING UTILITIES.
2. MINIMUM DOMESTIC WATER PIPE SIZE TO BE 3/4", UNLESS NOTED OTHERWISE. USE A REDUCING ELL AT WALL IF NECESSARY.
3. PLUMBING CONTRACTOR SHALL FLUSH AND VERIFY PROPER OPERATION OF EXISTING RWL DRAIN SYSTEM. SEE ARCH FOR LOCATION OF DRAINS.

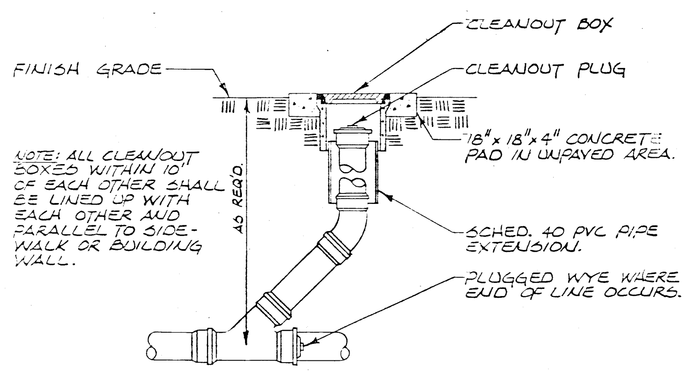

CLEANOUT TO GRADE DETAIL (F / MP-1)
SCALE : NONE

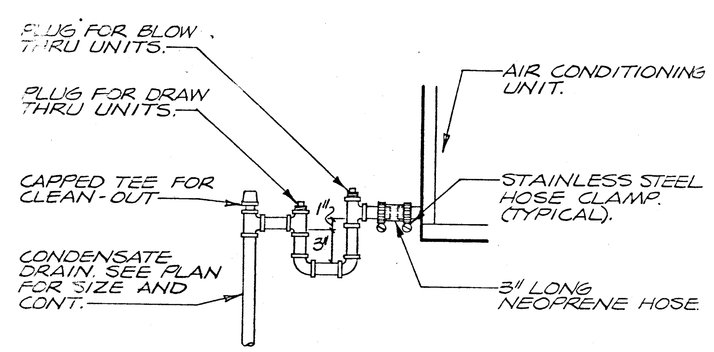

CONDENSATE DRAIN CONNECTION (D / MP-1)
SCALE : NONE

BUILDING 1

PARTIAL PLUMBING DEMOLITION PLAN
SCALE : 1/8" = 1'-0"

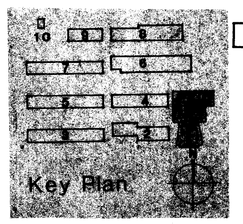

NOTE: NO WORK REQUIRED BY MECH/PLMBG FOR ALT. 2

approved

Donald R. Lawrence & Associates
CONSULTING MECHANICAL ENGINEERS
1300 W. Shaw Ave., Suite 2B Fresno, CA 93711
(209) 226-0101 ME11064

C-1128
C-3269
C-3132
*C-6564

biggar frapwell ghezzi cartnal
architects planners
31 south real road box 9698
bakersfield california 93309
805 832 8122
© copyrighted 1985

PARTIAL PLUMBING DEMOLITION PLAN, BLDG 1, DETAILS

BLAIR LEARNING CENTER RECONSTRUCTION
900 belle terrace, bakersfield, california

job # 83-122
date 3 OCT 1986

sheet MP-1

biggar frapwell ghezzi cartnal