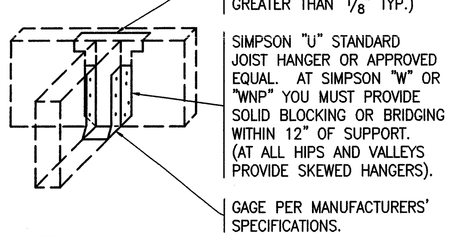

NOTE:
THIS TYPE OF HANGER TO BE USED TYPICAL WHERE APPLICABLE UNLESS NOTED OR SHOWN OTHERWISE ON THE PLANS AND DETAILS. USE SIZE AND TYPE OF NAILS AS REQUIRED BY MANUFACTURER AND FULLY DRIVE IN ALL NAILS. (FILL ALL HOLES).

TYPICAL JOIST HANGER DETAIL 6

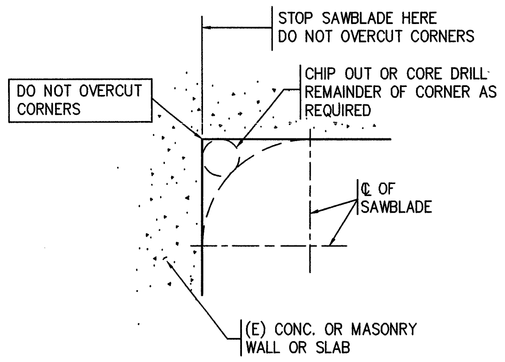

ELEVATION OR PLAN

TYP. SAW-CUTTING DETAIL 5

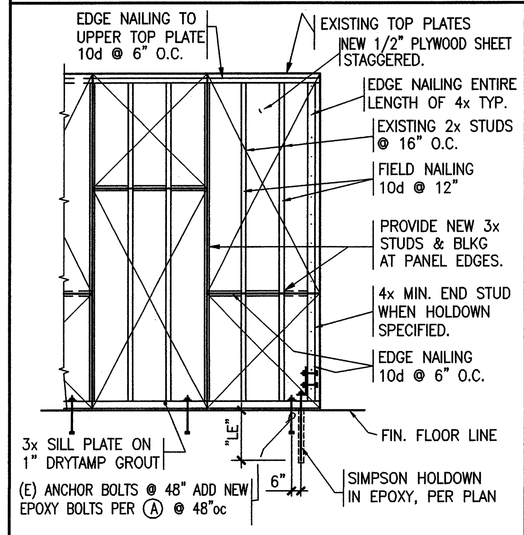

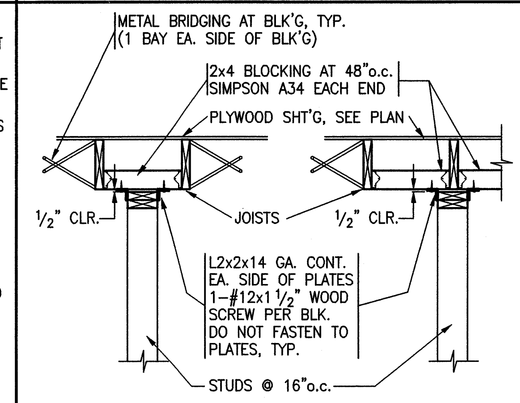

PARALLEL TO JOISTS

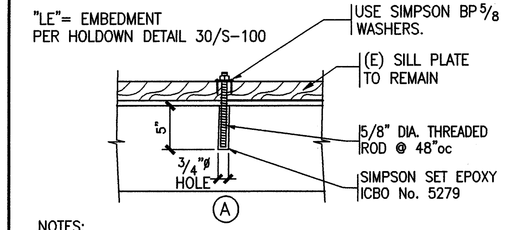

NOTES:
1. ALL PLYWOOD TO BE 1/2" PLYWOOD STRUCTURAL I-EXT. UNLESS OTHERWISE NOTED.
2. NO PLYWOOD TO BE LESS THAN 2'-0" WIDE.
3. ALL NAILING TO BE 1/2" MIN. TO EDGE OF SUPPORT AND SHEET.
4. GAP PLYWOOD SHEETS 1/8" MIN. TYPICAL.
5. SHEATH ENTIRE WALL BETWEEN CROSS WALLS TO AVOID LETTING IN OF PLYWOOD SHEATHING.
6. FOR MACHINE NAILING NOTES, SEE DETAIL 12/S-101.

TYPICAL SHEAR PANEL DETAIL 18

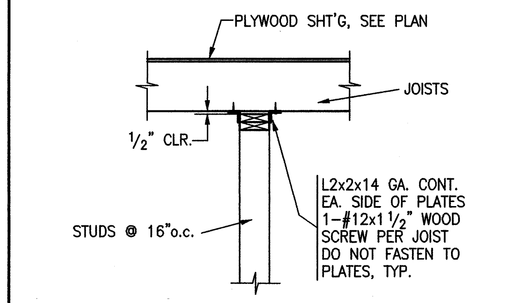

PERPENDICULAR TO JOISTS

TYP. NON-BEARING PARTITION ANCHORAGE AT SAWN LUMBER 17

EPOXY TYPE ANCHORS

ALL EPOXY ANCHORS INTO CONCRETE SHALL USE SIMPSON "SET" ADHESIVE ANCHOR SYSTEMS (ICBO NO. ER-5279). THREADED STEEL RODS SHALL BE IN COMPLIANCE WITH ASTM A36 AND REINFORCING BARS SHALL COMPLY WITH THE GENERAL NOTES. INSTALLATION SHALL FOLLOW THE MANUFACTURER'S INSTRUCTIONS.

50 PERCENT OF THE ANCHORS (ALTERNATE BOLTS IN ANY GROUP ARRANGEMENT) OR 10% FOR SILL BOLTS, SHALL BE PROOF TESTED IN TENSION AS INDICATED BELOW. IF THERE ARE ANY FAILURES, THE IMMEDIATELY ADJACENT BOLTS MUST THEN ALSO BE TESTED.

ANCHOR SIZE	EMBEDMENT(U.N.O.)	PROOF LOAD (lb)
3/8"	3 1/2"	3368
1/2"	4 1/4"	6000
5/8"	5"	9400
3/4"	6 3/4"	13536
7/8"	7 3/4"	18400

PROOF LOAD TESTS FOR EXPANSION TYPE ANCHOR BOLTS
(HILTI KWIK BOLT II EXPANSION ANCHOR, I.C.B.O. ER 4627)

ALL CONCRETE ANCHOR BOLTS OF THE EXPANSION TYPE (LOADED IN EITHER PULLOUT OR SHEAR) SHALL HAVE 50 PERCENT OF THE BOLTS (ALTERNATE BOLTS IN ANY GROUP ARRANGEMENT) PROOF TESTED AS INDICATED BELOW. IF THERE ARE ANY FAILURES, THE IMMEDIATELY ADJACENT BOLTS MUST THEN ALSO BE TESTED.

TYPE OF MATERIALS	TYPE OF TEST	BOLT DIAMETER 3/8"	1/2"	5/8"	3/4"
HARD ROCK CONCRETE	DIRECT PULL-TENSION, LBS.	2000	3200	4272	5800
	TORQUE WRENCH-TORQUE, FT. LBS.	25	50	100	225

LEGEND

NEW CONCRETE IN SECTION	98'-0" ELEVATION BOTTOM OF FOOTING
CONCRETE BLOCK IN PLAN OR BRICK IN SECTION	INDICATES FOOTING STEP
EXISTING CONCRETE IN SECTION	96'-0" ELEVATION BOTTOM OF GRADE BEAM
CONTINUOUS WOOD MEMBER IN SECTION	W.W.F. WELDED WIRE FABRIC
WOOD BLOCKING IN SECTION	A S-3 DET'L LETTER/NUM. SHT. NUMBER (SECTION &/OR DETAIL SYMBOL)
HD-7 INDICATES HOLDDOWN LOCATION	A S-3 ELEV. LETTER SHT. NUMBER WALL ELEVATION SYMBOL
ELEVATION SYMBOL	A S-3 ITEMS NOT NOTED AND/OR SHOWN REFER TO
A 15 SCHEDULE MARK APPROX. LENGTH PLYWOOD PANEL SYMBOL	DETAIL NOT APPLICABLE
A S-3 INDICATES REFERENCE FOR THE BALANCE OF THE SECTION	

TYPICAL WALL REINFORCEMENT (USE TYPICALLY UNLESS NOTED)

CONCRETE WALL THICKNESS	VERTICAL BARS	HORIZONTAL BARS	MASONRY WALL THICKNESS	VERTICAL BARS	HORIZONTAL BARS
6"	#4 @ 18"o.c. @ ℄ OF WALL	#4 @ 13"o.c.	6"	#4 @ 16"o.c. @ ℄ OF WALL	#4 @ 24"o.c.
8"	#4 @ 16"o.c. @ ℄ OF WALL	#4 @ 10"o.c.	8"	#4 @ 16"o.c. @ ℄ OF WALL	#5 @ 16"o.c.
10"	#4 @ 18"o.c. EACH FACE	#4 @ 16"o.c. EACH FACE	12"	#5 @ 32" E.F. (STAGG. 16")	#5 @ 32" E.F. (STAGG. 16")
12"	#4 @ 18"o.c. EACH FACE	#4 @ 13"o.c. EACH FACE			

STRUCTURAL ABBREVIATIONS

AB	ANCHOR BOLT	DIAG.	DIAGONAL	HD	HOLD DOWN	O.D.	OUTSIDE DIAMETER
ABV.	ABOVE	DIM.	DIMENSION	HDR.	HEADER	O.H.	OPPOSITE HAND
ADDL.	ADDITIONAL	DN.	DOWN	HGR	HANGER	OPNG.	OPENING
ALT.	ALTERNATE	DO	DITTO (REPEAT)	HORIZ	HORIZONTAL		
ARCH.	ARCHITECT(URAL)	DP.	DEEP	H.S.	HIGH STRENGTH	PARA.	PARALLEL
		DWG.	DRAWING	HSS	HOLLOW STEEL SECTION	P/C	PRECAST
BLDG.	BUILDING			HT	HEIGHT	PERP.	PERPENDICULAR
BLK.	BLOCK	EXIST.(E)	EXISTING			PL (℗)	PLATE
BLKG.	BLOCKING	EA.	EACH	I.D.	INSIDE DIAMETER	PLY.	PLYWOOD
BLW	BELOW	E.F.	EACH FACE	IN.	INCH	PSF	POUNDS PER SQUARE FOOT
BM.	BEAM	E.J.	EXPANSION JOINT	INT.	INTERIOR	PSI	POUNDS PER SQUARE INCH
B.N.	BOUNDARY NAILING	ELEC.	ELECTRICAL			P.T.	PRESSURE TREATED
BOTT.	BOTTOM	ELEV.	ELEVATION	JST	JOIST	P/T	POSTTENSIONED(PRESTRESSED)
BRG.	BEARING	EMBED	EMBEDMENT				
		E.N.	EDGE NAILING	LLH	LONG LEG HORIZONTAL	RAD. (R)	RADIUS
CAMB.(C)	CAMBER(ED)	EQ.	EQUAL	LLV	LONG LEG VERTICAL	REF.	REFERENCE
C.G.	CENTER OF GRAVITY	E.W.	EACH WAY	LONGL.	LONGITUDINAL	REQ.	REQUIRED
C.I.P.	CAST IN PLACE	EXP.	EXPANSION	LT. WT.	LIGHT WEIGHT	REINF.	REINFORCEMENT(ING)
CJ	CONSTRUCTION JOINT OR CONTROL JOINT	EXT.	EXTERIOR	LVL	Laminated Veneer Lumber	R.J.	ROOF JOIST
CJP	Complete Joint Penetration	FIN.	FINISH(ED)	MAX.	MAXIMUM	S.C.	SLIP CRITICAL
CL(℄)	CENTERLINE	FLR.	FLOOR	M.B.	MACHINE BOLT	SEP.	SEPARATION
CLG.	CEILING	FDN	FOUNDATION	MECH.	MECHANICAL	SCHED.	SCHEDULE
CLR.	CLEAR	FOB	FACE OF BLOCK OR BRICK	MEZZ.	MEZZANINE	SIM.	SIMILAR
CMU	CONCRETE MASONRY UNIT	FOC	FACE OF CONCRETE	MFR.	MANUFACTURER	SIMP.	SIMPSON
COL.	COLUMN	F.O. PLY	FACE OF PLYWOOD	MIN.	MINIMUM	SHT.	SHEET
CONC .	CONCRETE	FOS	FACE OF STUDS	MISC.	MISCELLANEOUS	SHTG.	SHEATHING
CONT.	CONTINUOUS	FRMG.	FRAMING	MTL.	METAL	SMS	SHEET METAL SCREWS
CRC	COLD ROLLED CHANNEL	F.S.	FAR SIDE			SPECS	SPECIFICATIONS
CTR.	CENTER(ED)	FT.	FOOT	N.I.C.	NOT IN CONTRACT	SQ	SQUARE
CTRSK.	COUNTERSINK	FTG.	FOOTING	NO. (#)	NUMBER	S.S.C.	SINGLE SHEAR CONNECTION
				N.S.	NEAR SIDE	STAGG.	STAGGER(ED)
d	PENNEY(NAILS)	GA.	GAGE	NTS	NOT TO SCALE	STIFF.	STIFFENER
DBL	DOUBLE	GALV.	GALVANIZED	NORM. WT.	NORMAL WEIGHT	STL.	STEEL
D.F.	DOUGLAS FIR	G.B.	GRADE BEAM			STRUC.	STRUCTURAL
DIA.(ø)	DIAMETER	GLB	GLUE-LAMINATED BEAM	o.c.	ON CENTER	SYMM.	SYMMETRICAL

T & B	TOP AND BOTTOM
T & G	TONGUE AND GROOVE
T.C.	TOP OF CONCRETE
TEMP.	TEMPORARY
THK .	THICK(NESS)
THRD.	THREADED
T.P.	TOP OF PARAPET
T. PLY	TOP OF PLYWOOD
TRANSV.	TRANSVERSE
T. SLB	TOP OF SLAB
T. STL	TOP OF STEEL
TSG	TAPERED STEEL GIRDER
T.W.	TOP OF WALL
TYP	TYPICAL
U.N.O.	UNLESS NOTED OTHERWISE
VERT	VERTICAL
w/	WITH
WBS	WELDED BEAM SEAT
WD	WOOD
WP	WORK POINT
WPJ	WEAKENED PLANE JOINT
W.S.	WELDED STUDS
WT.	WEIGHT
WWF	WELDED WIRE FABRIC

GENERAL NOTES

GENERAL

1. ALL WORK IS NEW, UNLESS NOTED AS EXISTING (E).
2. ALL MATERIALS AND WORKMANSHIP SHALL COMPLY WITH 2001 CALIFORNIA BUILDING CODE (CBC), INCLUDING THOSE CHAPTERS WITH SUFFIX "A" WHICH ARE ADOPTED BY THE DIVISION OF THE STATE ARCHITECT (DSA).
3. REFER TO TEST AND INSPECTIONS LIST FOR ALL TESTING AND INSPECTION REQUIREMENTS NOT SHOWN ON THESE DRAWINGS.
4. ANY DISCREPANCIES BETWEEN THE STRUCTURAL AND ARCHITECTURAL DRAWINGS SHALL BE BROUGHT TO THE ATTENTION OF THE ARCHITECT.
5. ALL EXISTING STUD WALLS w/ PLYWOOD SHALL BE LEFT UNTOUCHED UNLESS NOTED OTHERWISE BY STRUCTURAL ENGINEER. DO NOT REMOVE PLYWOOD, UNO.
6. CUTTING, BORING, SAWCUTTING OR DRILLING THROUGH THE NEW OR EXISTING STRUCTURAL ELEMENTS TO BE DONE ONLY WHEN SO DETAILED IN THE DRAWINGS OR ACCEPTED BY THE ARCHITECT AND STRUCTURAL ENGINEER WITH THE APPROVAL OF A DSA REPRESENTATIVE.

TIMBER NOTES

1. ALL FRAMING LUMBER SHALL BE GRADE MARKED DOUGLAS FIR-LARCH(GRADING RULE NO. 17).
   FRAMING LUMBER:
   JOISTS & PLANKS - NO. 1.
   BEAMS AND STRINGERS - SELECT STRUCTURAL.
   POST AND TIMBERS - SELECT STRUCTURAL.
   ALL OTHER LUMBER: "CONSTRUCTION" LIGHT FRAMING.
2. SILL PLATES SHALL BE PRESSURE TREATED DOUGLAS FIR UNLESS OTHERWISE NOTED. ALL BEARING AND SHEAR WALL MUDSILLS SHALL BE 3x SET ON A 1" MIN. DRYTAMP GROUT BED UNLESS OTHERWISE NOTED. AT ALL WALLS SHEATHED WITH PLYWOOD, INSTALL PLATE WASHERS UNDER BOLT HEADS AND NUTS THAT BEAR ON MUDSILL (ALL ANCHOR BOLTS). SEE TYPICAL SHEAR WALL DETAIL 18/S-100 FOR SIZE.
3. BEARING SILL PLATES BOLTED TO CONCRETE WITH 5/8"ø x12" HEADED ANCHOR BOLTS @ 4'-0" MAX. UNLESS OTHERWISE NOTED. AT ALL CORNERS, INTERSECTIONS, DOOR OPENINGS, SILL ENDS AND WHEREVER ANY CUT OR NOTCH IN THE SILL EXCEEDS 1/3 THE SILL WIDTH, PLACE A BOLT NOT OVER 9" FROM THE NOTCH OR END OF THE SILL PIECE. (USE 18" LONG ANCHOR BOLTS AT 6" HIGH CONCRETE CURB.)
4. STUDS SHALL BE SPACED @ 16" O.C. MAX. UNLESS NOTED OTHERWISE AND OF THE SIZE SHOWN ON THE PLANS AND/OR SECTIONS.
5. NO STRUCTURAL MEMBERS SHALL BE CUT FOR PIPES, VENTS, DUCTS, & OTHER SIMILAR OPENINGS EXCEPT AS DETAILED OR SPECIFIED.
6. JOISTS & RAFTERS SHALL BE BUTTED AND SPLICED WITH PLYWOOD SCABS AT SUPPORTS UNLESS OTHERWISE DETAILED. WHERE JOISTS ARE BUTTED SPLICE ONE SIDE WITH A PIECE OF 1/2" PLYWOOD, 12" LONG x DEPTH OF JOIST WITH 4-8d MINIMUM INTO EACH JOIST OR 2x JOIST DEPTH x12" LONG SCAB WITH 4-16d MINIMUM INTO EACH JOIST.
7. 2x SOLID BLOCKING SHALL BE PLACED BETWEEN ALL JOISTS AND RAFTERS AT ALL POINTS OF SUPPORT AND UNDER ALL SUPPORTED TRANSVERSE PARTITIONS. 2x3 OR 1x4 CROSS BRIDGING OR 2" SOLID BLOCKING FULL DEPTH SHALL BE PLACED BETWEEN ALL JOIST AND RAFTERS (GREATER THAN 8" IN DEPTH) AT 8'-0" INTERVALS. APPROVED NAILABLE TYPE METAL CROSS BRIDGING OF EQUAL STRENGTH MAY BE USED IN LIEU OF CROSS BRIDGING.
   PROVIDE NAILABLE CROSS BRIDGING AT ALL SUPPORTS WHERE JOISTS ARE HUNG WITH JOIST HANGERS (W SERIES TYPE, ETC.) OFF OF THE TOP PLATE OF STUD WALLS AND THE TOP OF WOOD BEAMS AND/OR NAILERS. EXCEPTIONS; OMIT THESE CROSS BRIDGING WHERE HANGERS ARE WELDED TO THE TOP OF STEEL BEAMS, OR WHERE JOIST HANGERS ARE NAILED TO THE FACE OF WOOD BEAMS (SIMILAR TO SIMPSON "U" HANGERS).
8. BOLTS FASTENING WOOD MEMBERS TOGETHER SHALL BE FITTED WITH STANDARD CUT WASHERS. HOLES FOR BOLTS SHALL BE BORED 1/16" LARGER THAN THE NOMINAL BOLT DIAMETER.
9. DOUBLE TOP PLATES ON ALL EXTERIOR AND BEARING PARTITIONS (NOT OTHERWISE DETAILED) SHALL LAP 4'-0" MIN. AT SPLICES AND HAVE 16-16d MIN. THRU LAP.
10. PLYWOOD SHALL CONFORM TO PS-1 STRUCTURAL I-EXT. UNLESS NOTED OTHERWISE.
11. MINIMUM NAILING SHALL BE PER TABLE 23A-I1-B-1 IN THE CBC. USE COMMON NAILS. ALL NAILS LARGER THAN 16d TO BE PREDRILLED, DRILL DIAMETER TO BE 50% OF NAIL SHANK DIAMETER.
12. ALL LAG SCREWS TO BE PREDRILLED, DRILL DIAMETER TO BE 60% OF SHANK DIAMETER.
13. RE-TIGHTEN ALL ANCHOR BOLTS JUST BEFORE CLOSING IN.
14. FASTNERS SUCH AS NAILS, BOLTS, SCREWS, ANCHOR BOLTS, ETC. FOR PRESSURE-PRESERVATIVE TREATED AND FIRE-RETARDANT TREATED WOOD SHALL BE OF HOT-DIPPED ZINC COATED GALVANIZED OR STAINLESS STEEL

AUTOMATIC END WELDED STUDS

1. AUTOMATIC END WELDED STUDS SHALL BE NELSON GRANULAR FLUXFILLED SHEAR CONNECTOR OR ANCHOR STUDS (OR APPROVED EQUAL). STUDS SHALL BE MANUFACTURED OF C-1015 COLD ROLLED STEEL WHICH CONFORMS TO A.S.T.M. SPECIFICATION A-108-58-T.
2. THE STUDS SHALL BE AUTOMATICALLY END WELDED IN ACCORDANCE WITH THE MANUFACTURER'S RECOMMENDATIONS IN SUCH A MANNER AS TO PROVIDE COMPLETE FUSION BETWEEN THE END OF THE STUD AND THE PLATE. THERE SHOULD BE NO POROSITY OR EVIDENCE OF LACK OF FUSION BETWEEN THE WELDED END OF THE STUD AND THE PLATE. THE STUD SHALL DECREASE IN LENGTH DURING WELDING APPROXIMATELY 1/8" FOR 5/8" AND UNDER , AND 3/16" FOR OVER 5/8" DIAMETER. WELDING SHALL BE DONE ONLY BY QUALIFIED WELDERS APPROVED BY THE WELDING INSPECTOR.
3. INSPECTION, IN ACCORDANCE WITH TITLE 24, SECTION 2231A.5, OF ALL THE SHOP AND FIELD WELDING OPERATIONS FOR THE AUTOMATIC END WELDED STUDS SHALL BE MADE BY A QUALIFIED WELDING INSPECTOR (APPROVED BY THE DIVISION OF THE STATE ARCHITECT). THE TYPE AND CAPACITY OF THE WELDING EQUIPMENT SHALL BE IN ACCORDANCE WITH THE MANUFACTURER'S RECOMMENDATIONS AND SHALL BE CHECKED AND APPROVED BY A WELDING INSPECTOR.
4. AT THE BEGINNING OF EACH DAY'S WORK, A MINIMUM OF TWO TEST STUD WELDS SHALL BE MADE WITH THE EQUIPMENT TO BE USED TO METAL WHICH IS THE SAME AS THE ACTUAL WORK PIECE. THE TEST STUDS SHALL BE SUBJECTED TO A 90° BEND TEST BY STRIKING THEM WITH A HEAVY HAMMER. AFTER THE ABOVE TEST, THE WELD SECTION SHALL NOT EXHIBIT ANY TEARING OUT OR CRACKING.
   TESTING OF END-WELDED STUDS SHALL BE IN ACCORDANCE WITH SECTION 2231A.3, PART 2, TITLE 24.

POWDER DRIVEN SHOT PINS (LOW VELOCITY)

1. SHOT PINS MAY BE USED FOR SHEAR LOADS AND THEY MAY BE USED IN TENSION TO SUPPORT LOADS LESS THAN 100 POUNDS FOR MINOR LOADS LIKE ACOUSTICAL CEILINGS, DUCT WORK, CONDUIT ETC. ANY SHOT ANCHORS MUST HAVE ICBO APPROVAL FOR THE TYPE OF CONCRETE USED ON THE JOB. SHOT PINS MAY NOT BE USED IN CONCRETE CURBS.
2. THE ALLOWABLE LOADS SHALL BE 100 POUNDS OR 80% OF ICBO APPROVED VALUES, WHICHEVER IS LESS. QUALIFICATION FOR USE OF OF ALL POWDER ACTUATED TOOLS MUST MEET ANSI A10.3 STANDARD AS REQUIRED BY THE MANUFACTURURER AND ALL OSHA REQUIREMENTS.
3. TESTING: THE OPERATOR, TOOL, AND FASTENER SHALL BE PRE-QUALIFIED BY THE PROJECT INSPECTOR. HE SHALL OBSERVE THE TESTING OF THE FIRST 10 FASTENER INSTALLATIONS. A TEST "PULL-OUT" LOAD OF NOT LESS THAN TWICE THE DESIGN LOAD SHALL BE APPLIED TO THE PIN IN SUCH A MANNER AS NOT TO RESIST THE SPALLING TENDENCY OF THE CONCRETE SURROUNDING THE PIN. THEREAFTER, RANDOM TESTS UNDER THE PROJECT INSPECTOR'S SUPERVISION SHALL BE MADE OF APPROXIMATELY 1 IN 10 PINS. IF ANY PIN FAILS TESTING, TEST ALL PINS OF THE SAME CATEGORY NOT PREVIOUSLY TESTED UNTIL TWENTY (20) CONSECUTIVE PASS, THEN RESUME THE INITIAL TESTING FREQUENCY.

REINFORCED CONCRETE

1. NO BRICK OR POROUS MATERIAL SHALL BE USED TO SUPPORT FOOTING STEEL OFF THE GROUND. (PRECAST CONCRETE DOBIES ARE APPROVED).
2. ALL CONCRETE SHALL HAVE AN ULTIMATE COMPRESSIVE STRENGTH OF 3000 PSI AT 28 DAYS, (4" MAXIMUM SLUMP FOR FLAT WORK.)
3. ANCHOR BOLTS AND DOWELS SHALL BE SECURELY HELD IN PLACE BEFORE CONCRETE IS POURED.
4. ALL REINFORCING STEEL SHALL BE ASTM A-615 GRADE 60.
   SPLICES IN REINFORCING STEEL SHALL LAP AS FOLLOWS:
   #6 AND SMALLER = 57 BAR DIA. UNLESS NOTED OTHERWISE.
5. THE CLEAR DISTANCE BETWEEN PARALLEL BARS SHALL BE ONE BAR DIAMETER BUT NO LESS THAN 1-1/2" U.N.O.
6. REINFORCING STEEL SHALL HAVE A PROTECTED CONCRETE COVERING AS FOLLOWS UNLESS NOTED OTHERWISE.

WALL STEEL BELOW GRADE:	ON DIRT SIDE WHEN POURED AGAINST DIRT	= 3"
	ON DIRT SIDE WHEN FORMED	= 2"
WALL STEEL ABOVE GRADE:	IN ALL CASES	= 1-1/2"
OTHER ITEMS:	FOOTING PADS	= 3"
	SLABS (ON EARTH)	= 2"
	SLABS (LIGHT WEIGHT CONCRETE)	= 3/4"
	SLABS (HARD ROCK CONCRETE)	= 1"
	JOISTS (SIDES, TOPS & SOFFITS)	=1"
	COLUMNS (TO MAIN STEEL)	=2"
	BEAM GIRDERS (SIDES, TOPS AND SOFFITS)	= 2"

7. SEE ARCH'L & MECH'L DRAWINGS FOR LOCATIONS OF PIPES, VENTS, DUCTS, AND OTHER SIMILAR OPENINGS.
8. ALL REINFORCING STEEL IS TO BE PLACED IN RELATIVE POSITION SHOWN ON DRAWINGS. NO SPLICES IN ANY REINFORCING WILL BE PERMITTED EXCEPT THOSE SHOWN ON THE STRUCTURAL DRAWINGS.

SIMPSON HOLDOWN SCHEDULE

PER 2003 SIMPSON STRONG-TIE COMPANY INC. CATALOG.

NAME	STUD BOLTS	BOLT	"CL"	"SB"	"HB"	"LE"	"D"
HD8A	3- 7/8" M.B.	7/8" A.B.	2 7/16	3 1/2	6 3/16	10"	1"

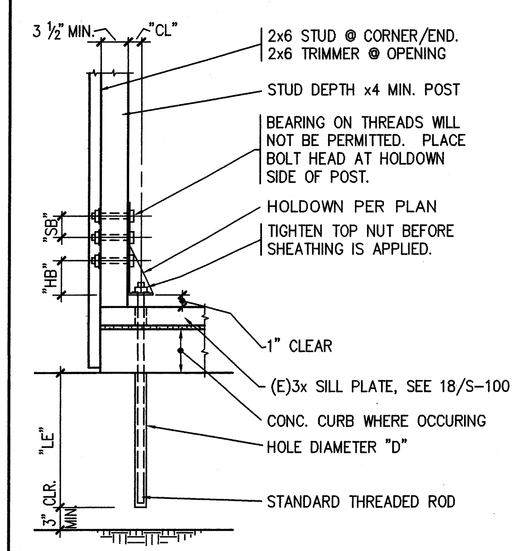

USE SIMPSON SET EPOXY ADHESIVE (ICBO 5279). PER MANUFACTURER'S INSTRUCTIONS.

NOTES: TO PROPERLY LOCATE HOLDOWN ANCHOR BOLTS, THE CONTRACTOR IS TO CHECK STRUCTURAL FRAMING AND LOCATION OF ARCHITECTURAL OPENINGS BEFORE PLACING BOLTS.

EPOXY ANCHORS AT HOLDOWN 30

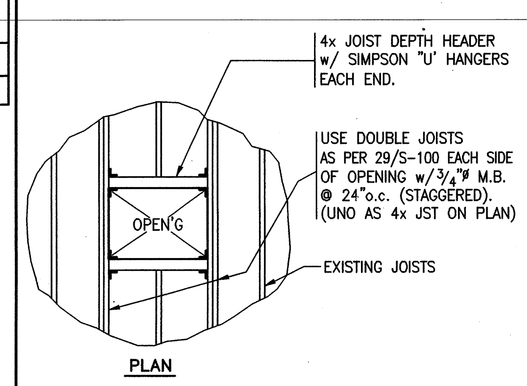

PLAN

TYP. OPENING DETAIL AT ROOF WHEN JOIST(S) IS INTERRUPTED 23

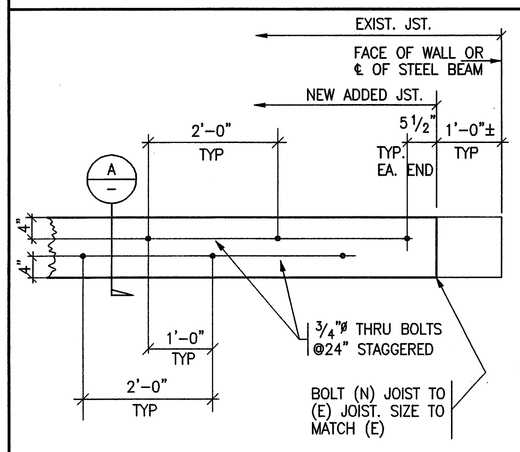

NEW WOOD JOIST TO EXISTING

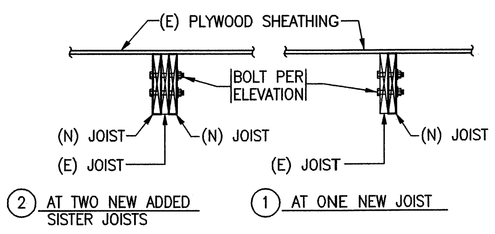

END VIEW Ⓐ 28

Structural Steel

1. All plates shall conform to ASTM A-36, unless noted otherwise. Tubes shall be ASTM A-500 Grade B. Pipes shall be ASTM A-53, Grade B. Identification procedures shall conform to ASTM A-6.
2. Welding shall conform to current edition of AWS D1.1 and shall use either the shielded or submerged arc methods. Electrodes used for welding to A-36 steel shall be E70XX low hydrogen type. Welders shall be AWS certified. All welds shall be continuously inspected by an AWS certified inspector approved by the DSA.
3. Steel fabricator to verify all dimensions with architectural drawings and existing conditions.
4. All bolt holes shall be 1/16" larger than the bolt diameter, typical unless noted otherwise.
5. All bolts in steel-to-steel connections shall be ASTM A-307 machine bolts, where applicable.

ORDIZ MELBY ARCHITECTS, INC.
5500 MING AVENUE SUITE 280
BAKERSFIELD, CALIFORNIA 93309
TELEPHONE (661) 832-5258
FACSIMILE (661) 832-4291

LICENSED ARCHITECT DANNY E. ORDIZ No. 8088 DEC. 18 2004 STATE OF CALIFORNIA

DANNY E. ORDIZ, AIA
ARCHITECT C-14,728
WILLIAM J. MELBY, AIA
ARCHITECT C-16,835

CONSULTANT

REGISTERED PROFESSIONAL ENGINEER WILFRED W. MARTIN No. 2256 Exp. 12-31-05 STRUCTURAL STATE OF CALIFORNIA

MARTIN & HB Structural Engineers
1212 S. FLOWER STREET, LOS ANGELES 90015
(213) 744-1414 JOB NO. 2002.572

IDENTIFICATION STAMP
DIVISION OF STATE ARCHITECT
OFFICE OF REGULATION SERVICES

APPL. 03-107003
FILE #15-6
AC FLS SS
DATE JAN 2 6 2004

MODERNIZATION AT CURRAN MIDDLE SCHOOL FOR:

BAKERSFIELD CITY SCHOOL DISTRICT

1116 LYMRIC WAY
BAKERSFIELD
CALIFORNIA
93309

BUILDING KEY PLAN

MARK	DATE	DESCRIPTION
SD	XX/XX/XX	XXXX
CD		
△		
△		
△		
△		

JOB NUMBER: 2002480
CAD DRAWING FILE: S100-2572
DRAWN BY: TL/MXG
CHECKED BY: SBF.

CHECK AND VERIFY ALL DIMENSIONS BEFORE PROCEEDING WITH THE WORK. REPORT DISCREPANCIES TO THE ARCHITECT.

THE DRAWINGS, IDEAS, AND DESIGNS REPRESENTED ON THIS SHEET ARE THE PROPERTY OF THE ARCHITECT.

COPYRIGHT
ORDIZ-MELBY ARCHITECTS, INC. 2002

SHEET TITLE

GENERAL NOTES AND TYPICAL DETAILS

SHEET IDENTIFICATION NUMBER

S-100

SHEET OF