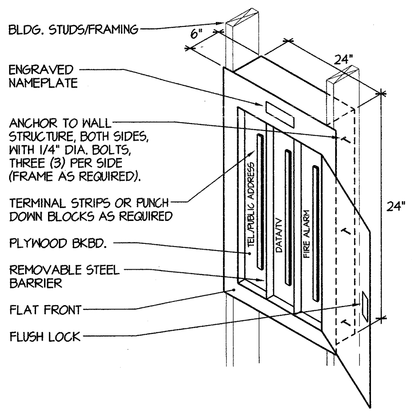

1 FLUSH MOUNTED SIGNAL T.C.

NTS

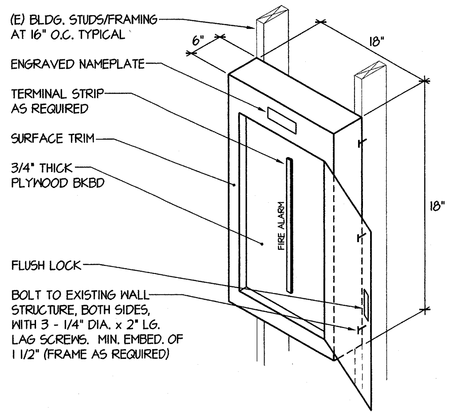

2 FIRE ALARM T.C. "F.A.T.C." MOUNTING

NTS

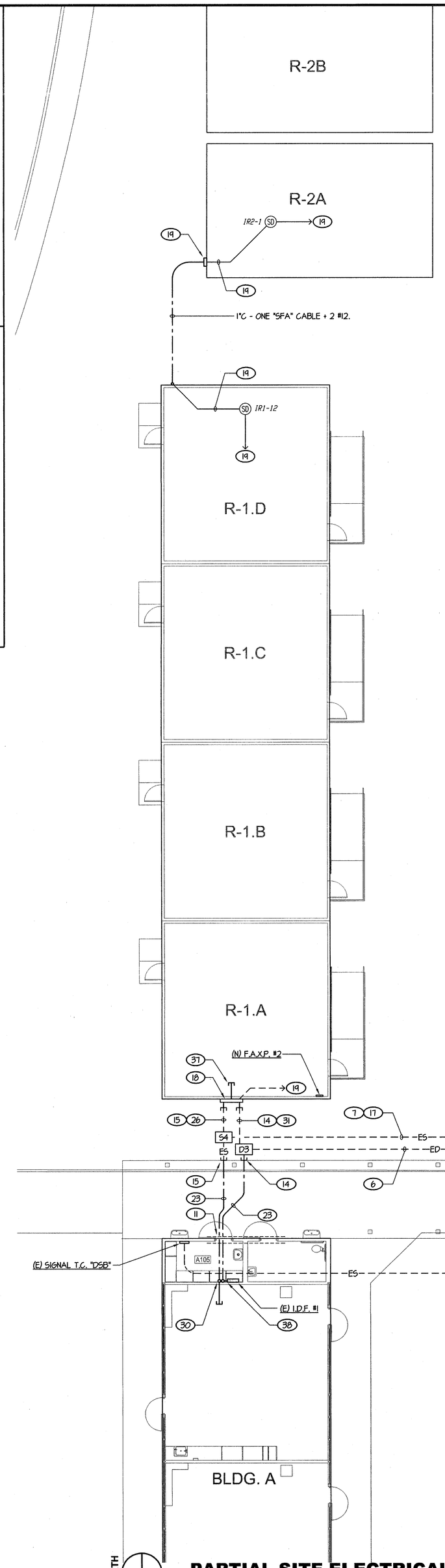

COMPLETE AUTOMATIC FIRE ALARM PLAN SUBMITTAL

THE FIRE ALARM SYSTEM SHOWN ON THESE PLANS HAS BEEN SUBMITTED AND APPROVED BY THE DIVISION OF THE STATE ARCHITECT. ANY SUBSTITUTION OF THE FIRE ALARM SYSTEM SHALL BE RESUBMITTED TO THE ARCHITECT FOR REVIEW AND APPROVAL. THE CONTRACTOR SHALL PAY ANY ADDITIONAL FEES THAT ARE INCURRED DUE TO THIS SUBSTITUTION.

THE AUTOMATIC FIRE ALARM SYSTEM SHALL COVER ALL ROOMS AND AREAS AND UPON ACTIVATION OF AN INITIATING DEVICE ALERT ALL OCCUPANTS AND TRANSMIT THE ALARM, SUPERVISORY, AND TROUBLE SIGNALS TO AN APPROVED SUPERVISING STATION. EXCEPTION: SMOKE DETECTORS ARE NOT REQUIRED IN NON-ACCESSIBLE AREAS AS DEFINED IN EMERGENCY EXPRESS; TERMS OF PROPOSED S.F.M. AMENDMENTS TO 2001 C.F.C., SECTION 210 (C.F.C. SECTIONS 1006.2.4.2.2.1.1 AND 1006.2.4.2.2.1.5)

TYPICAL NOTES (SHEETS #ADD-007 E-113 AND #ADD-007 E-114 U.O.N.):

1. ----ES---- DENOTES APPROXIMATE LOCATION OF EXISTING "SIGNALS" FEEDERS AND/OR "SPARE" CONDUITS. TYPICAL.
2. ----ED---- DENOTES APPROXIMATE LOCATION OF EXISTING "DATA" FEEDERS AND/OR "SPARE" CONDUITS. TYPICAL.
3. EXISTING PULL BOX(ES) SHALL REMAIN.
4. EXISTING UTILITY POLE.
5. SAWCUT AND PATCH EXISTING A/C PAVING, CONCRETE SIDEWALKS AND/OR CONCRETE SLABS AS REQUIRED TO INSTALL NEW CONDUITS AND PULL BOXES. CONTRACTOR'S OPTION TO BORE UNDER SAID AREAS AS REQUIRED. VERIFY WITH ARCHITECT AND OWNER FOR EXACT ROUTING OF ALL SITE FEEDERS AND LOCATIONS OF PULL BOXES. TYPICAL.
6. EXISTING "SPARE" CONDUITS: 2"C (DATA); 2"C (TELEPHONE); TWO 2"C (SPARES)
7. EXISTING "SPARE" CONDUITS: 1 1/2"C (FIRE ALARM); 2"C (EMS); 2"C (SECURITY); 2"C (PUBLIC ADDRESS); TWO 2"C (SPARES).
8. PROVIDE NEW PULL CAN (24" x 24" x 6") ON EXTERIOR WALL PER DETAIL #7/E-150. REFER TO RESPECTIVE FIRE ALARM PLANS FOR REQUIREMENTS AND FOR CONTINUATION OF FIRE ALARM FEEDER INTO EACH BUILDING. VERIFY EXACT LOCATION WITH OWNER PRIOR TO ANY WORK.
9. EXISTING "SPARE" CONDUIT: 1"C (SECURITY CAMERA AT POLES).
10. DENOTES LOCATION OF "FUTURE" POLE ASSEMBLY, CONCRETE BASE, FLOOD LIGHTS AND SECURITY CAMERA.
11. BORE UNDER EXISTING FOOTING, DEPTH AS REQUIRED. VERIFY EXACT ROUTING OF NEW CONDUITS INTO ROOM WITH ARCHITECT. BACK FILL ENTIRE EXCAVATION UNDER EXISTING FOOTING WITH CONCRETE.
12. EXISTING SIGNALS PULL BOX. TYPICAL
13. EXISTING DATA PULL BOX. TYPICAL.
14. EXISTING "SPARE" CONDUITS: 2"C (DATA); 2"C (TEL); 2"C (SPARE).
15. EXISTING "SPARE" CONDUITS: 1"C (FIRE ALARM); 1"C (EMS); 2"C (P.A.); 1 1/2"C (SECURITY); 2"C (SPARE).
16. PULL IN TWO "SFA" CABLES (ONE "SFA" CABLE IS SPARE) IN (E) 1 1/2"C.
17. PULL IN ONE "SFA" CABLE IN (E) 1 1/2"C.
18. ACCESS EXISTING SIGNALS WIREWAY. REMOVE EXISTING CONDUITS NOT BEING USED.
19. REFER TO RESPECTIVE FIRE ALARM PLAN FOR ADDITIONAL INFORMATION AND CONTINUATION OF FIRE ALARM FEEDER INTO BUILDING.
20. EXISTING 2" TELEPHONE SERVICE CONDUIT.
21. PICK UP AND EXTEND EXISTING CONDUITS TO PULL CAN OR WIREWAY. PULL IN FOUR "SFA" CABLES IN THE 1"C.
22. PICK UP AND EXTEND EXISTING CONDUITS TO NEW PULL BOX. PULL IN FOUR "SFA" CABLES IN THE 1 1/2"C.
23. PICK UP AND EXTEND EXISTING CONDUITS INTO BUILDING (SEE NOTE #30)
24. 1"C - ONE "SFA" CABLE TO THE SMOKE DETECTOR SHOWN. REFER TO SHEET #E-141 OR SHEET #E-143.
25. PROVIDE NEW CONDUITS PER NOTE #7. PULL IN FOUR "SFA" CABLES IN THE 1 1/2"C.
26. PROVIDE NEW CONDUITS PER NOTE #15. PULL IN TWO "SFA" CABLES IN THE 1"C.
27. 1 1/2"C - FOUR "SFA" CABLES TO F.A.T.C. #1.
28. PROVIDE NEW CONDUITS PER NOTE #15. PULL IN TWO "SFA" CABLES AND 2 #12 IN THE 1 1/2"C.
29. PROVIDE A SIGNAL TERMINAL CABINET PER DETAIL #1/ADD-007 E-113.
30. RUN CONDUITS UP WALL AS DIRECTED BY OWNER AND STUB ALL CONDUITS UP INTO ACCESSIBLE ATTIC SPACE, U.O.N..
31. PICK UP AND EXTEND EXISTING CONDUITS TO PULL CAN, PULL BOX OR WIREWAY AS SHOWN U.O.N..
32. THREE 2"C PER NOTE #14..
33. PROVIDE NEW PULL BOX CHRISTY #B1730 AND MOUNT PER DETAIL #13/E-150.
34. REFER TO DETAIL #2/ADD-007 E-113.
35. STUB ALL CONDUITS OF NOTES #26 AND #32 (U.O.N.) UP INTO ACCESSIBLE ATTIC SPACE.
36. STUB ALL CONDUITS OF NOTES #25 AND #32 (U.O.N.) UP INTO ACCESSIBLE ATTIC SPACE.
37. STUB ALL CONDUITS OF NOTES #14 AND #15 (U.O.N) UP INTO ACCESSIBLE ATTIC SPACE.
38. RUN ONE 2"C TO THE EXISTING I.D.F. CABINET.
39. PROVIDE TWO 2"C TO THE SIGNAL CLOSET.

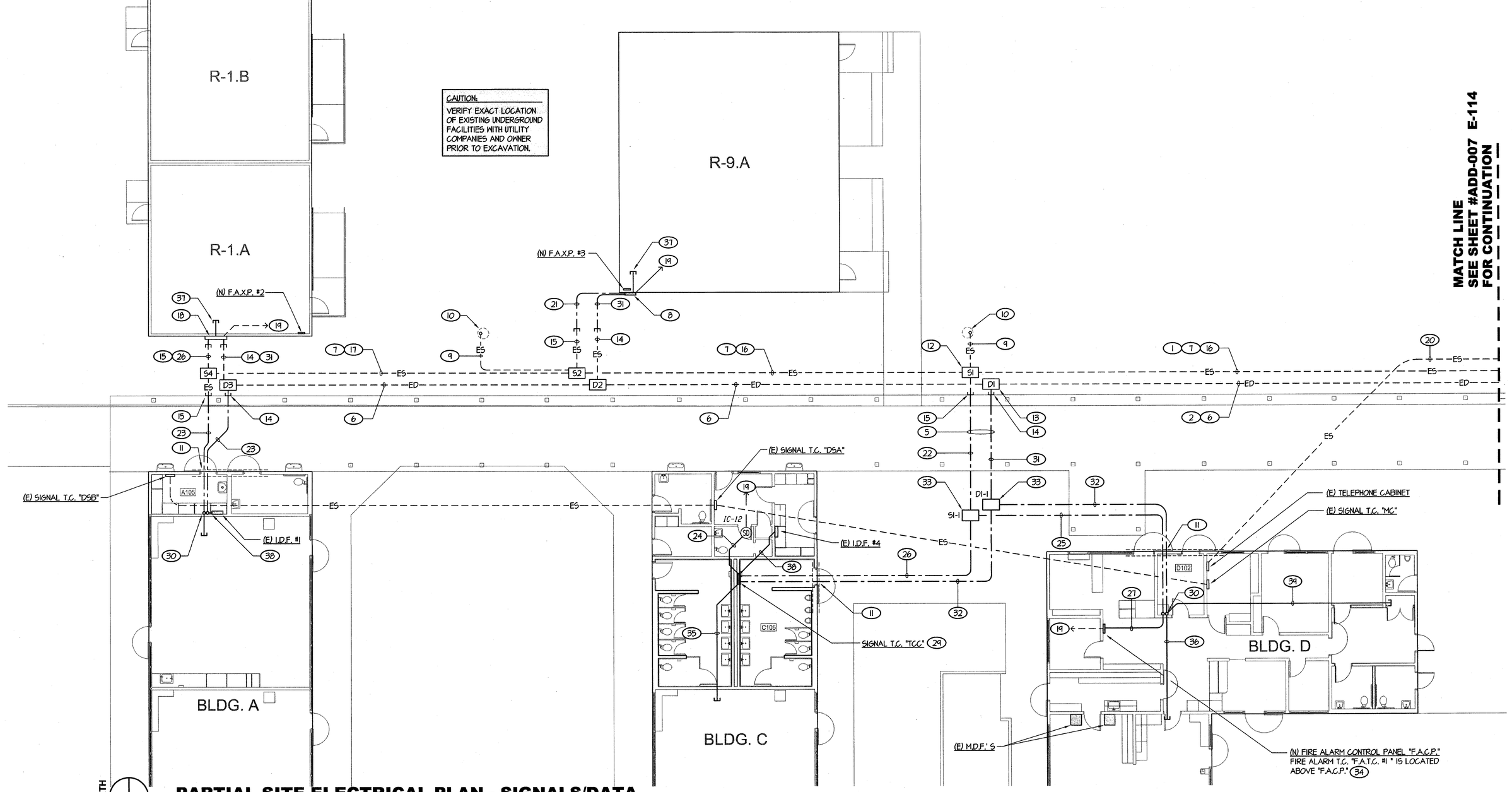

PARTIAL SITE ELECTRICAL PLAN - SIGNALS/DATA

1" = 10' - 0"

0' 5' 10' 20'

ORDIZ MELBY ARCHITECTS, INC.

5500 MING AVENUE SUITE 280
BAKERSFIELD, CALIFORNIA 93309
TELEPHONE (661) 832-5258
FACSIMILE (661) 832-4291

LICENSED ARCHITECT WILLIAM JOHN MELBY No. C-16835 DEC. 31 2009 STATE OF CALIFORNIA

DANNY E. ORDIZ, AIA
ARCHITECT C-14,726

WILLIAM J. MELBY, AIA
ARCHITECT C-16,835

CONSULTANT

REGISTERED PROFESSIONAL ENGINEER THEODORE W. ROSE No: E17820 Exp. 6/30/09 ELECTRICAL STATE OF CALIFORNIA

Rose Sing and Associates, Inc.
Electrical Consultants
131 S. Dunworth – (559)733-2671
Visalia, California 93292-6705

IDENTIFICATION STAMP
DIVISION OF STATE ARCHITECT
OFFICE OF REGULATION SERVICES

APPL. 03-107003
FILE # 15-6

AC _____ FLS _____ SS _____

DATE _____

MODERNIZATION AT CURRAN MIDDLE SCHOOL FOR:

BAKERSFIELD CITY SCHOOL DISTRICT

1116 LYMRIC WAY
BAKERSFIELD
CALIFORNIA
93309

MARK	DATE	DESCRIPTION

JOB NUMBER:
2002480
CAD DRAWING FILE:

DRAWN BY:
ES
CHECKED BY:
TWR

CHECK AND VERIFY ALL DIMENSIONS BEFORE PROCEEDING WITH THE WORK. REPORT DESCREPANCIES TO THE ARCHITECT.

THE DRAWINGS, IDEAS, AND DESIGNS REPRESENTED ON THIS SHEET ARE THE PROPERTY OF THE ARCHITECT.

COPYRIGHT
ORDIZ-MELBY ARCHITECTS, INC. 2004

SHEET TITLE

PARTIAL SITE ELECT. PLAN - SIGNALS/DATA

SHEET IDENTIFICATION NUMBER

ADD-007
E-113

SHEET OF

R:\A\SCHOOLS\BFIELD\BCSD\CURRAN\2007 REVISIONS UPGRADE\E-113.dwg REVISED: 01-10-08 BY: DP RSA JOB #07-140.01-RS