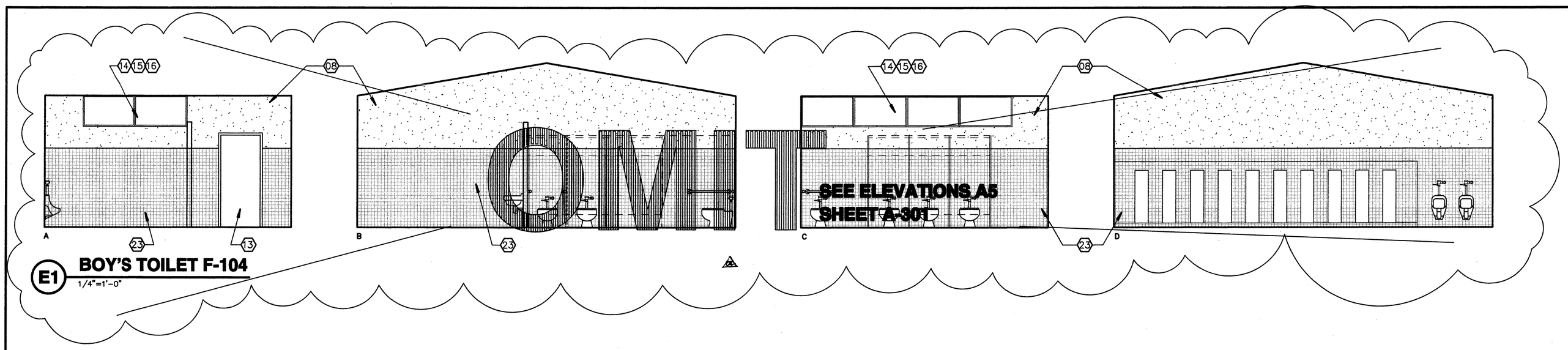

E1 BOY'S TOILET F-104
1/4"=1'-0"

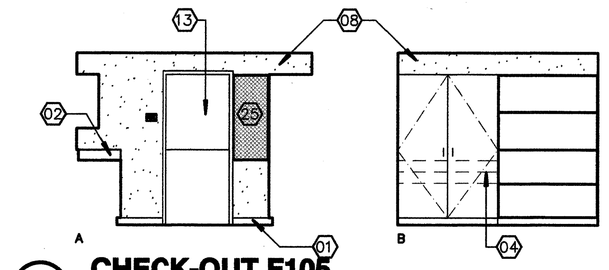

D1 CHECK-OUT F105
1/4"=1'-0"

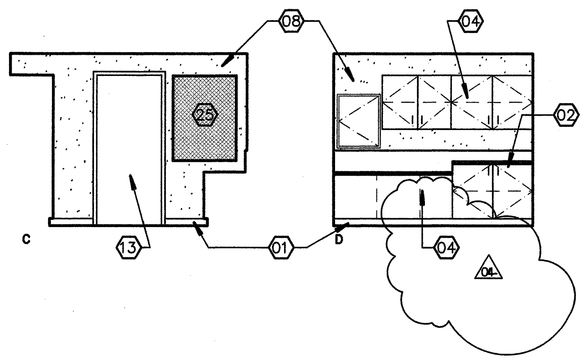

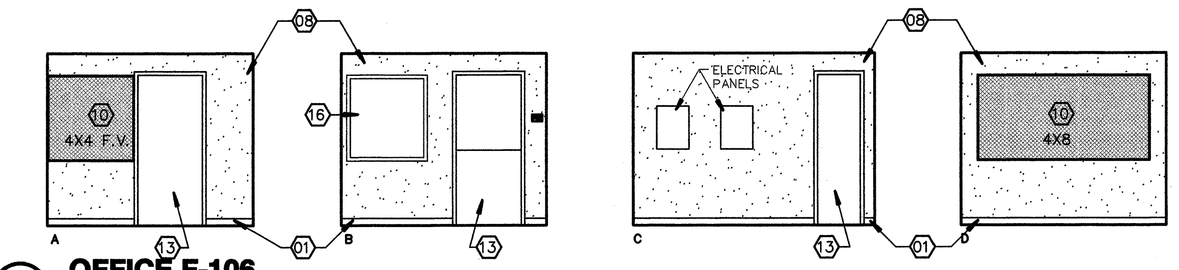

D3 OFFICE F-106
1/4"=1'-0"

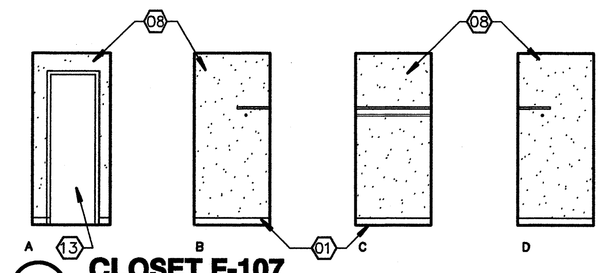

C1 CLOSET F-107
1/4"=1'-0"

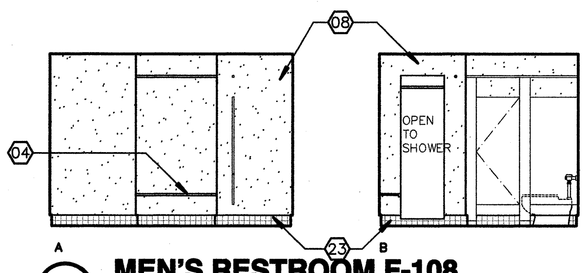

C2 MEN'S RESTROOM F-108
1/4"=1'-0"

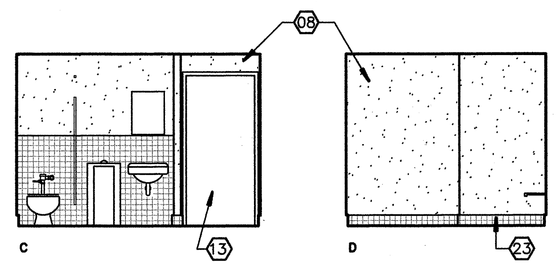

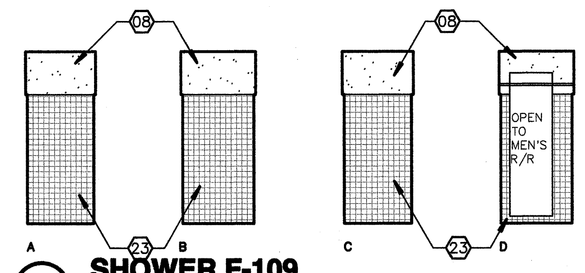

C4 SHOWER F-109
1/4"=1'-0"

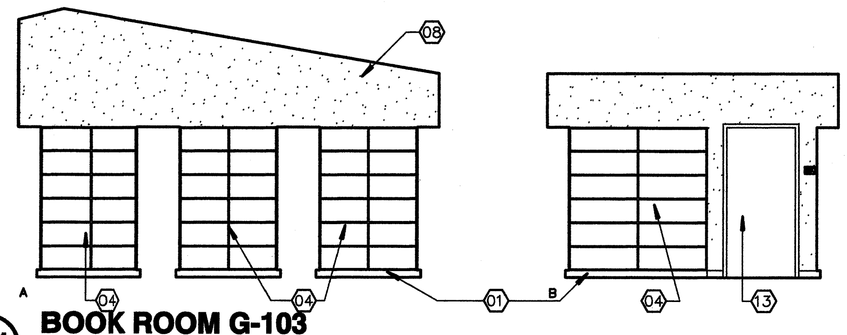

B1 BOOK ROOM G-103
1/4"=1'-0"

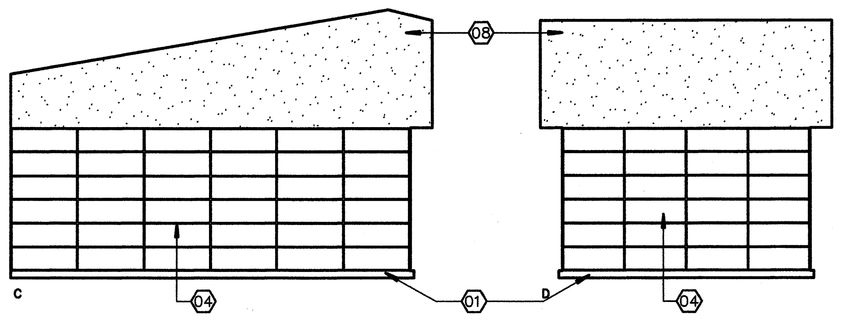

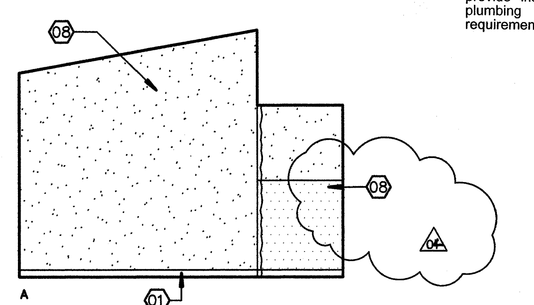

B5 DINING ROOM G-104
1/4"=1'-0"

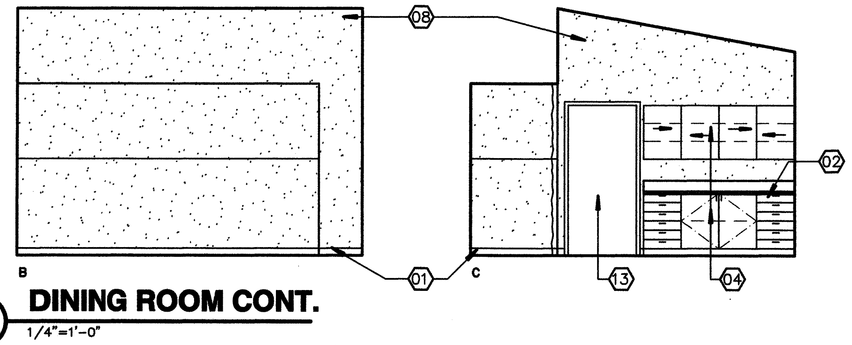

A1 DINING ROOM CONT.
1/4"=1'-0"

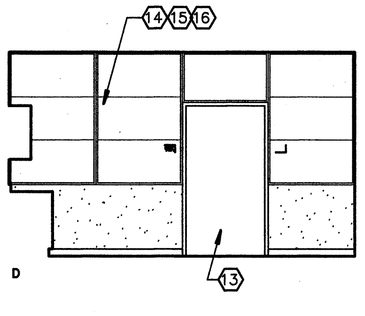

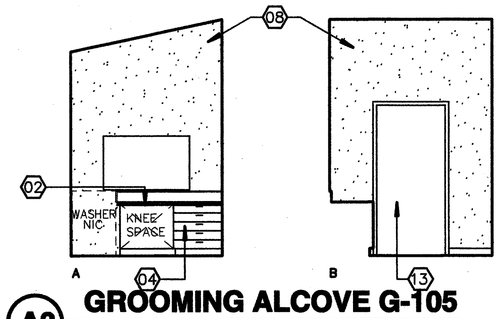

A3 GROOMING ALCOVE G-105
1/4"=1'-0"

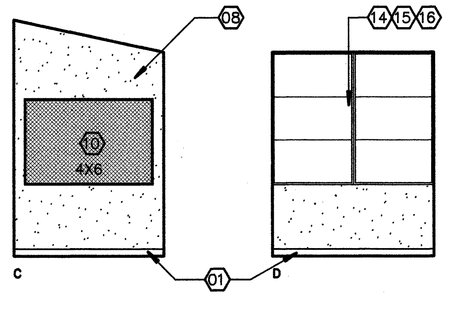

00 KEYNOTES
THIS SHEET ONLY

01 REMOVE (E) RUBBER BASE WHERE OCCURS–PROVIDE/INSTALL RTSB.

02 REMOVE/REPLACE (E) COUNTERTOP W/CORIAN COUNTER TOP W/6" SPLASH, (UNO) CAULK AT WALL.

03 REPLACE EXISTING SINK CABINET WITH ADA COMPLIANT SINK CABINET TYPICAL ALL SINK CABINETS

04 (E) CABINET TO REMAIN, REMOVE DOOR AND DRAWER PULLS, SAND ALL SURFACES, (DOORS, DRAWERS, SHELVES, ETC) TO REMOVE BUILT–UP PAINT, FILL DAMAGED AREAS, PREP & PAINT– REINSTALL HARDWARE.

05 MAINTAIN (E) OPEN SPACE FOR METAL FILE CABINET.

06 PROVIDE/INSTALL PAPER TOWEL DISPENSER–SEE SPECIFICATIONS.

07 PATCH/FILL DAMAGED WALLS AS REQUIRED, PREP– PAINT (E) PLYWOOD WALLS.

08 PATCH/FILL DAMAGED WALLS AS REQUIRED, PREP– PAINT (E) PLASTER FINISH WALLS.

09 REMOVE/REPLACE CHALK BOARDS W/LIQUID MARKER BOARDS SEE SPECIFICATIONS.

10 REMOVE/REPLACE (E) TACKBOARDS–SEE SPECIFICATIONS SEE DETAIL A6/A–231 FOR MOUNTING REQUIREMENTS

11 REMOVE ABANDON HEATER UNIT, CAP ALL SUPPLY/RETURN LINES BEHIND WALL, REMOVE VENT OPENING @ EXTERIOR WALL. INFILL MATCH 2X FRAMING, INSTALL INSULATION, PATCH–MATCH FINISHES–PAINT.

12 (E) DOOR/FRAME TO REMAIN, REPLACE HARDWARE W/ ACCESSIBLE HARDWARE. SEE DOOR SCHEDULE, SAND PREPARE DOOR SURFACE, PAINT EXTERIORS, RE–STAIN PREVIOUSLY STAINED AREAS WHERE OCCURS.

13 (E) DOOR/FRAME TO REMAIN. SEE DOOR SCHEDULE. SAND PREPARE DOOR SURFACE, PAINT EXTERIORS, RE–STAIN PREVIOUSLY STAINED AREAS WHERE OCCURS.

14 @ WINDOWS CLEAN/PRIME TUBE STEEL MULLIONS–PAINT

15 @ WINDOWS CLEAN/PRIME PAINTED METAL WINDOW FRAME–PAINT

16 @ WINDOWS CLEAN/PRIME WOOD TRIM (JAMB/SILL/HEAD WH/OCCURS)–PAINT.

17 (E) WALL MOUNTED TV/BRACKET TO REMAIN.

18. REMOVE (E) TROUGH SINK, PROVIDE/INSTALL CORIAN COUNTER W/6" SPLASH & H.C. ACCESSIBLE SINK–CONNECT TO (E) SUPPLY/WASTE LINES–SEE PLUMBING DWGS. BREAK OUT TILE AS REQUIRED FOR INSTALLATION OF BLOCKING FOR COUNTERTOP–PATCH TILE–MATCH FINISHES.

~~19 REMOVE (E) WOOD SHELF/COAT ROD/HOOKS, PROVIDE/INSTALL PLASTIC LAMINATE SHELF @ SAME LOCATION–MATCH HEIGHT & DEPTH OF REMOVED SHELF.~~ OMIT

20 REMOVE (E) WOOD SHELF/COAT ROD/HOOKS, PATCH WALL AS REQUIRED, PAINT PLYWOOD WALL.

21 PREP(E) WOOD COUNTERTOP & ANGLED SHELVES–PAINT.

22 MODIFY (N) COUNTERTOP @ H.C. SINK CABINET TO PROVIDE 27" CLEAR KNEE SPACE.

23 (E) CERAMIC TILE TO REMAIN

24 (N) COUNTERTOP AND PIANO HINGES, PREP/PAINT CABINETS

25 (E) TACKBOARD TO REMAIN (N.I.C.)

Item No. 18: Refer to Sheet A-2310
Omit Interior Elevations E1. Interior Elevation "DI" Elevation "D" Keynote # 24 incorrect, revise to read."04." Revise Keynote #02 to read. "Remove and replace existing counter top with corian countertop with 6" splash (unless noted otherwise) calk to wall typical." Revise Keynote 03 to read. "Replace existing sink cabinet with ADA compliant sink cabinet, typical all sink cabinets." Revise Keynote #4 to read. "Existing cabinet to remain, remove and replace all doors, drawer fronts, & face plates. Finish per specifications." Revise Keynote #18 to read. "Remove existing trough sink, provide install corian counter with 6" splash & accessible sink per plumbing plans. See addendum drawing ADD-007 for further requirements." Delete Keynote #19

Add #4

ORDIZ MELBY
ARCHITECTS, INC.
5500 MING AVENUE SUITE 280
BAKERSFIELD, CALIFORNIA 93309
TELEPHONE (661) 832-5258
FACSIMILE (661) 832-4291

LICENSED ARCHITECT
WILLIAM JOHN MELBY
No. C-16835
DEC. 31 2007
RENEWAL DATE
STATE OF CALIFORNIA

DANNY E. ORDIZ, AIA
ARCHITECT C-14,728
WILLIAM J. MELBY, AIA
ARCHITECT C-16,835
CONSULTANT

IDENTIFICATION STAMP
DIVISION OF STATE ARCHITECT
OFFICE OF REGULATION SERVICES

APPL. 03-107003
FILE # 15-6

AC _____ FLS _____ SS _____

DATE _____

MODERNIZATION AT CURRAN MIDDLE SCHOOL FOR:

BAKERSFIELD CITY SCHOOL DISTRICT

1116 LYMRIC WAY
BAKERSFIELD
CALIFORNIA
93309

BUILDING KEY PLAN

MARK	DATE	DESCRIPTION
SD		
CD		
01	08/23/07	ADDENDUM 1
02	09/11/07	ADDENDUM 2
03	11/01/07	ADDENDUM 3

JOB NUMBER:
2002480
CAD DRAWING FILE:
12:42 PM
DRAWN BY:
TT
CHECKED BY:
MKB

CHECK AND VERIFY ALL DIMENSIONS BEFORE PROCEEDING WITH THE WORK. REPORT DESCREPANCIES TO THE ARCHITECT.

THE DRAWINGS, IDEAS, AND DESIGNS REPRESENTED ON THIS SHEET ARE THE PROPERTY OF THE ARCHITECT.

COPYRIGHT
ORDIZ-MELBY ARCHITECTS, INC. 2002

SHEET TITLE

INTERIOR ELEVATIONS BUILDINGS F & G

SHEET IDENTIFICATION NUMBER

A-2310

SHEET 29 OF 46

PLOT TIME: 12:42 PM
PLOT DATE: 11-2-2007
PATH NAME: 12:42 PM
PLOT SCALE: 1/4" = 1'-0"