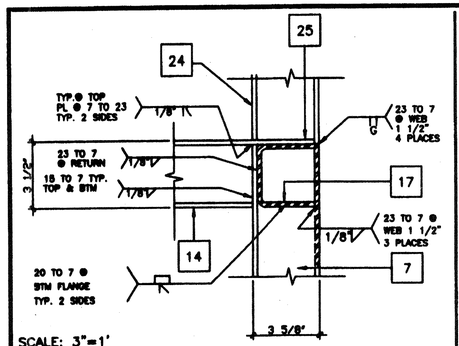

SCALE: 3"=1'

COLUMN SECTION 11

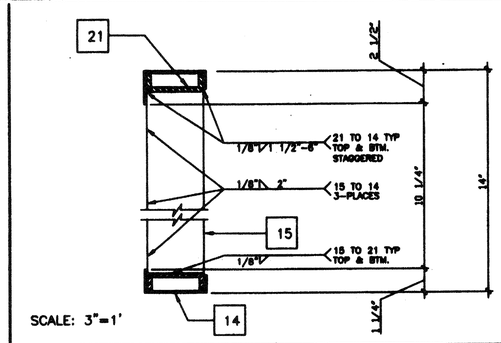

SCALE: 3"=1'

MECH. DUCT OPENING IN HEADER 4

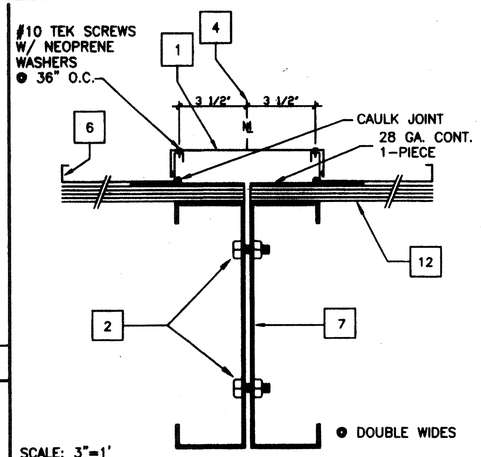

SCALE: 3"=1'

ROOFING AT MODLINE 1

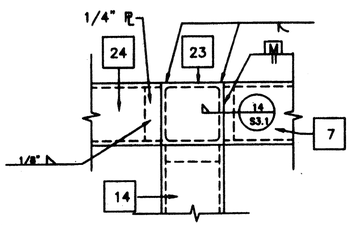

SCALE: 3"=1'

COLUMN CAP PLATE 12

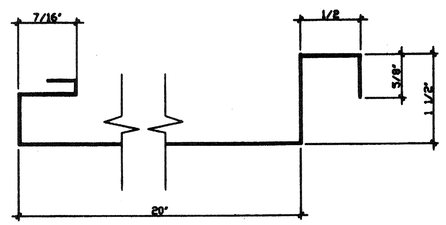

SCALE: NTS

ROOF PAN 5

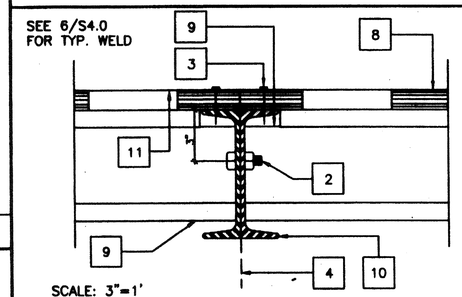

SCALE: 3"=1'

MODULE JOINT AT FLR. 2

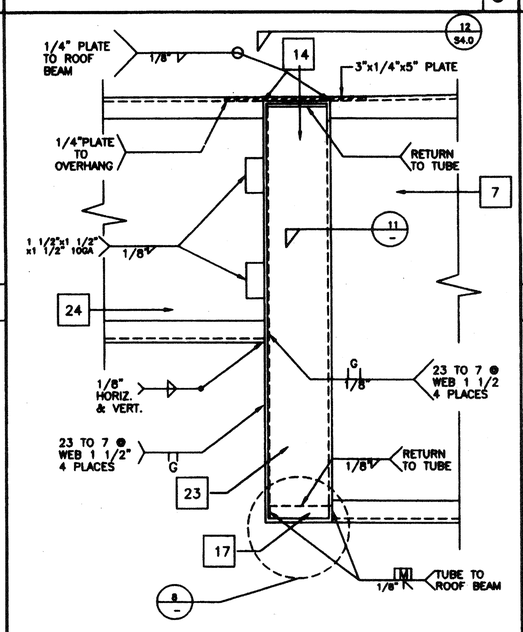

SCALE: 3"=1'

ROOF HEADER AT FRONT OVERHANG MONO PITCH 10

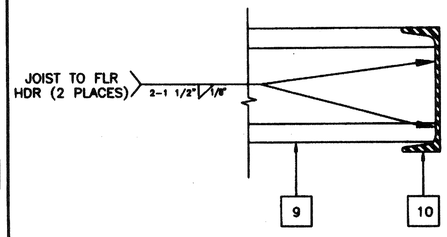

SCALE: 3"=1'

FLOOR FRAME/JOIST TO BEAM 6

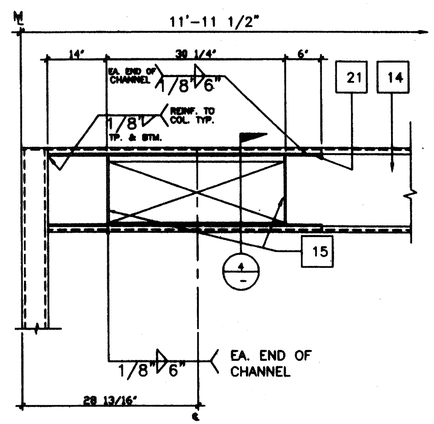

SCALE: 1"=1'

ELEVATION-OPENING 3

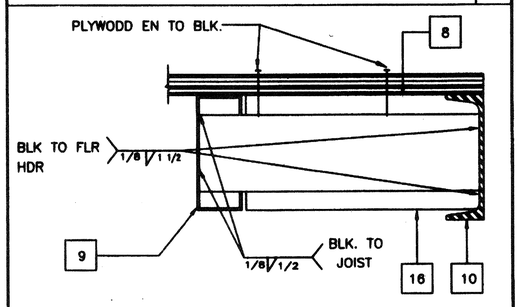

SCALE: 3"=1'

REVISED

BLOCK AT MIDSPAN 7

KEY NOTES

1	CAP CLOSURE ● RIDGE 26GA. GALV. W/#10 TYPE FASTENERS W/NEOPRENE WASHERS TO RIB BOTH SIDES OF MODLINE. SET CAP IN SEALANT SEE DETAIL-
2	5/8" M.B. A307 MODULE JOINT (SEE STRUCTURAL PLAN FOR LOCATION) ● 8" O.C.
3	E.N.
4	MODULE JOINT
5	NOT USED
6	STANDING ROOF SEAM (SEE A2.0)
7	ROOF BEAM (SEE STRUCTURAL) SEE 3/S3.1 & 12/S3.1
8	PLYWOOD FLOOR SHEATHING
9	FLOOR JOIST 6/S3.1
10	FLOOR BEAM (SEE STRUCTURAL 5/S3.1) C7x9.8
11	HAND HOLE ● BOLT LOCATION
12	PLYWOOD ROOF SHEATHING
13	3 1/2"X3 1/2"X1/4" STEEL TUBE COLUMN
14	ROOF HEADER (SEE STRUCTURAL 1/S3.1)
15	1/4" STIFFENER PLANE SEE 9/S3.1 FOR TYP. WELD
16	"C" BLOCKING SEE 6/S3.1
17	10GA. BACK-UP PL
18	NOT USED
19	NOT USED
20	2"X2"X3/16" ∠
21	3 1/4"X1"X45 11/16" LX10GA. CHANNEL TOP & BOTTOM CENTER OF OPENING
22	ROOF PURLIN SEE 2/S3.1
23	TUBE STEEL (SEE 11/S3.1) STIFFFNER COPE TO FIT ROOF BEAM.
24	ROOF BEAM AT OVERHANG SEE 4/S3.1

IDENTIFICATION STAMP DIV. OF THE STATE ARCHITECT OFFICE OF REGULATION SERVICES 04 100596 AC FLS SS DATE AUG 10 1998

IDENTIFICATION STAMP DIV. OF THE STATE ARCHITECT AP03 116574 AC FLS SS DATE SEP 23 2015

FILE # P266 S40.DWG

PROJECT NO. 2900

PC-266

REVISIONS			
1			
2			
3			
4			
5			

Electrical Engineer's Seal

Mechanical Engineer's Seal

Structural Engineer's Seal — LICENSE EXPIRES 6-30-2000

Architects Seal — LICENSED ARCHITECT GEORGE C. EDWARDS No. C 2956 REN. 9-30-97 STATE OF CALIFORNIA

Division of the State Architect — IDENTIFICATION STAMP DIV. OF THE STATE ARCHITECT OFFICE OF REGULATION SERVICES PC-266 AC FLS SS DATE JUN 25 1997

MODTECH INC.
2830 BARRETT AVENUE
PERRIS, CALIF. 92572
PH (909) 943-4014
FAX (909) 940-0427

PROJECT NUMBER: 2900

© MODTECH, INC. 1997

4012-083

drawn by: 2765
date:
checked by: 2852
date: 2854
Modtech project no: 2900 2818

MODTECH Index No.

STRUCTURAL DETAILS

S4.0

STKP-37