GENERAL NOTES:

GENERAL NOTES:

1. ALL CONSTRUCTION SHALL COMPLY WITH THE 1994 EDITION OF THE CALIFORNIA BUILDING CODE, CCR TITLE 24, PART 2 (CBC) AND CCR TITLE 24, PART 1, CHAPTER 4, GROUP 1, LATEST REVISIONS (MODIFICATIONS TO THE 1994 UNIFORM BUILDING CODE (UBC), UBC STANDARDS AND UBC RECOGNIZED STANDARDS. – NOTE, ALL UBC RECOGNIZED STANDARDS AS APPLICABLE ARE REQUIRED FOR THIS PROJECT.) ALSO REFER TO THE DIVISION OF THE STATE ARCHITECT – STRUCTURAL SAFETY SECTION "INTERPRETATIONS OF REGULATIONS". SEE ESPECIALLY IR 23-6. THESE STRUCTURES ARE DESIGNED PER THE MODIFIED REQUIREMENTS TEMPORARY FOUNDATIONS (U.O.N.).
2. THE CONTRACTOR SHALL BE RESPONSIBLE FOR THE SAFETY OF THE BUILDING DURING CONSTRUCTION AND SHALL PROVIDE ADEQUATE SHORING AND BRACING DURING CONSTRUCTION. CONTRACTOR SHALL COMPLY WITH APPLICABLE SAFETY REGULATIONS.
3. DETAILS NOT SPECIFICALLY SHOWN SHALL BE SIMILAR TO DETAILS FOR SIMILAR CONSTRUCTION SHOWN ON THESE DRAWINGS.
4. THE CONTRACTOR SHALL COORDINATE THE WORK OF ALL TRADES AND SHALL CHECK ALL DIMENSIONS. ANY DISCREPANCIES SHALL BE CALLED TO THE ATTENTION OF THE OWNER AND BE RESOLVED BEFORE PROCEEDING WITH THE WORK.
5. NO STRUCTURAL MEMBERS SHALL BE CUT, NOTCHED OR OTHERWISE PENETRATED UNLESS SPECIFICALLY APPROVED BY THE STRUCTURAL ENGINEER IN ADVANCE OR SHOWN ON THESE DRAWINGS.
6. TYPICAL DETAILS SHALL APPLY <u>UNLESS SHOWN OTHERWISE</u> ON THE DRAWINGS.
7. WHERE THESE GENERAL NOTES AND TYPICAL DETAILS ARE IN CONFLICT WITH THE SPECIFICATIONS, THESE GENERAL NOTES AND TYPICAL DETAILS SHALL GOVERN.
8. PROVIDE OPENINGS, CURBS, FRAMING AND/OR SUPPORTS FOR ITEMS INDICATED ON ARCHITECTURAL, MECHANICAL, ELECTRICAL OR OTHER DRAWINGS INCLUDED IN CONSTRUCTION DOCUMENTS.
9. REFER TO ARCHITECTURAL DRAWINGS FOR DIMENSIONS AND OTHER INFORMATION NOT SPECIFICALLY SHOWN ON STRUCTURAL DRAWINGS.
10. ALL ELEVATIONS ARE REFERENCED FROM TOP OF FINISHED FIRST FLOOR ELEVATION = 0'-0".
11. PROVIDE INSPECTIONS, TESTS AND REPORTS IN ACCORDANCE WITH CCR TITLE 24, PART 2 AND CCR TITLE 24, PART 1, CHAPTER 4, GROUP 1.
12. IN ADDITION TO CONTINUOUS PROJECT INSPECTION, THE FOLLOWING SPECIAL INSPECTIONS SHALL BE REQUIRED, AS A MINIMUM:
    A. INSPECTION OF ALL WELDING FOR STRUCTURAL STEEL, PER TITLE 24, PART 2, SECTION 2212A.5.
    B. INSPECTION FOR CONCRETE AND CONCRETE REINFORCEMENT PLACEMENT, PER TITLE 24, PART 1, CHAPTER 4, GROUP 1 AND TITLE 24, PART 2, SECTION 1701A.
13. ALL REQUIRED INSPECTIONS AND TESTS ARE THE RESPONSIBILITY OF THE OWNER. ALL INSPECTORS SHALL PROVIDE REPORTS AS REQUIRED BY TITLE 24, PART 1, CHAPTER 4, GROUP 1.
14. DIMENSIONS AND ELEVATIONS SHOWN ARE APPROXIMATE AND ARE PROVIDED AS AN AID IN INTERPRETING THE DRAWINGS ONLY. DIMENSIONS AND ELEVATIONS MUST BE VERIFIED WITH ARCHITECTURAL DRAWINGS. IN THE EVENT OF CONFLICT, DIMENSIONS AND ELEVATIONS SHOWN ON ARCHITECTURAL DRAWINGS SHALL GOVERN. DRAWING SCALES GIVEN ARE APPROXIMATE – DO NOT SCALE PLANS OR DETAILS.
15. WHEN MODULE IS RELOCATED – DO NOT REINSTALL NAILS OR SCREWS IN EXISTING HOLES.

WOOD:

1. STRUCTURAL FRAMING SHALL BE HEM FIR – LARCH GRADED IN ACCORDANCE WITH THE STANDARD GRADING RULES OF THE WESTERN WOOD PRODUCTS ASSOCIATION OR STANDARD GRADING RULES NO. 16 OF THE WEST COAST LUMBER INSPECTION BUREAU, LATEST EDITIONS. GRADES SHALL BE AS FOLLOWS UNLESS NOTED OTHERWISE ON THE DRAWINGS. (HEM FIR SOUTH IS <u>NOT</u> ALLOWED.) EACH PIECE SHALL BE GRADE MARKED AND NO PIECE MAY FALL BELOW GRADES INDICATED.
   ALL FRAMING EXCEPT AS NOTED HEM FIR NO. 2.
2. PLYWOOD SHALL BE AS SHOWN ON THESE DRAWINGS WITH EXTERIOR GLUE IN ACCORDANCE WITH U.S. PRODUCT STANDARD PS 1-95. ALL PANELS SHALL BE MARKED WITH AN APA GRADE MARK WITH AN IDENTIFICATION INDEX AS SHOWN ON DRAWINGS. USE 4'x8' PANELS, MINIMUM, EXCEPT AT BOUNDARIES AND FRAMING CHANGES WHERE MINIMUM PANEL DIMENSION SHALL BE 24" AT ROOFS AND FLOORS AND 12" AT WALLS.
3. BOLTS FOR TIMBER CONNECTIONS SHALL CONFORM TO ANSI/ASME STANDARD B18.2.1-1981 AND 1991 EDITION OF THE NDS. BOLTS SHALL BE INSTALLED IN ACCORDANCE WITH THE REQUIREMENTS OF OF THE LATEST EDITION OF THE NATIONAL DESIGN SPECIFICATION FOR WOOD CONSTRUCTION BY THE NATIONAL FOREST PRODUCTS ASSOCIATION (NDS). BOLT HOLES SHALL BE 1/32 TO 1/16 INCH LARGER THAN BOLT DIAMETER. RE-TIGHTEN BOLTS BEFORE CLOSING IN WORK. BOLTS SHALL BE FULL BODY STEEL BOLTS WITH MINIMUM YIELD STRENGTH OF 45,000 PSI.
4. LAG SCREWS SHALL BE STEEL AND CONFORM TO ANSI/ASME STANDARD B18.2.1 AND THE REQUIREMENTS OF THE 1991 NATIONAL DESIGN SPECIFICATION FOR WOOD CONSTRUCTION (NDS). HOLES FOR LAG SCREW SHANKS SHALL BE BORED THE SAME DEPTH AND DIAMETER AS THE SHANK. THE REMAINING DEPTH OF PENETRATION OF THE SCREW SHALL BE BORED TO 70% OF THE SHANK DIAMETER. ONE QUARTER INCH (1/4") DIAMETER LAG SCREWS NEED NOT HAVE PRE-DRILLED HOLES IF IT CAN BE SHOWN THAT THE WOOD MEMBERS ARE NOT DAMAGED DURING INSTALLATION. PROVIDE FULL DIAMETER BODY LAG SCREWS WITH BENDING YIELD STRENGTHS PER TABLES 9.3 IN NDS.
5. PROVIDE MALLEABLE IRON WASHERS OR EQUIVALENT CUT PLATE WASHERS (NOT LESS THAN A STANDARD CUT WASHER) UNDER NUTS AND BOLT OR LAG SCREW HEADS WHICH BEAR ON WOOD.
6. WOOD SCREWS SHALL CONFORM TO ANSI/ASME STANDARD B18.6.1 AND THE REQUIREMENTS OF THE 1991 NATIONAL DESIGN SPECIFICATION FOR WOOD CONSTRUCTION BY THE NATIONAL FOREST PRODUCTS ASSOCIATION (NDS). GALVANIZED OR OTHER CORROSION RESISTANT COATING WHERE EXPOSED TO WEATHER OR USED IN FOUNDATIONS. SCREWS SHALL BE STEEL WITH CUT THREADS AND BENDING YIELD STRENGTHS PER TABLES 11.3 IN NDS.
7. WOOD MEMBERS SHALL BE CUT OR NOTCHED ONLY AS SHOWN ON STRUCTURAL DRAWINGS.
8. WHEN REQUIRED NAILING TENDS TO SPLIT WOOD MEMBERS, NAIL HOLES SHALL BE PRE-BORED TO 3/4 OF THE NAIL DIAMETER.
9. STRUCTURAL NAILING SHALL BE WITH FULL HEAD COMMON NAILS PER ALL REQUIREMENTS OF 1991 NDS. NAILING NOT SPECIFICALLY INDICATED SHALL COMPLY WITH CCR TITLE 24, PART 2, TABLE 23A-I-Q. ALL NAILS SHALL BE GALVANIZED OR OTHER CORROSION RESISTANT COATING WHERE EXPOSED TO WEATHER, IN FOUNDATIONS AND AS NOTED ON PLANS, PER THE REQUIREMENTS OF CCR TITLE 24, PART 2, WITH MINIMUM BENDING YIELDS PER TABLE 12.3B IN NDS. (SEE NAIL EQUIVALENCE BELOW.)
10. NAIL EQUIVALENCE: (PROVIDE MINIMUM NAIL LENGTHS AS REQUIRED FOR SPECIFIED PENETRATION, TYP. U.O.N.)
    6d EQUALS .113" DIA. – PROVIDE 1.36" MIN. POINT PENETRATION
    8d EQUALS .131" DIA. – PROVIDE *1.57" MIN. POINT PENETRATION
    10d EQUALS .148" DIA. – PROVIDE *1.78" MIN. POINT PENETRATION
    16d EQUALS .162" DIA. – PROVIDE *1.94" MIN. POINT PENETRATION
    * 1 1/2" AT 2x MEMBERS
11. EXCEPT WHERE MORE STRINGENT CONSTRUCTION IS SHOWN ON THE DRAWINGS, WOOD CONSTRUCTION SHALL COMPLY WITH TITLE 24, PART 2, SECTION 2326A, CONVENTIONAL LIGHT-FRAME CONSTRUCTION PROVISIONS, AS A MINIMUM.
12. PRESSURE PRESERVATIVE TREATMENT SHALL BE PER SECTION 2303A.1.3, CCR TITLE 24, PART 2. PROVIDE QUALITY MARK ON ALL TREATED FOUNDATION MEMBERS FROM AGENCY APPROVED BY DSA. ALL FOUNDATION MEMBERS SHALL BE MARKED AS "FOR GROUND CONTACT (LP22)" OR "FOR ABOVE GROUND USE (LP2)" AS APPROPRIATE. TREAT ALL CUT ENDS OF PRESSURE TREATED MEMBERS WITH AN APPROVED PRESERVATIVE. (WILLARD W/B COPPER GREEN 2% OR AN APPROVED EQUIVALENT). WHERE NOTED, MEMBERS BELOW THE SUB FLOOR THAT ARE NOT A PART OF THE FOUNDATION SHALL BE PRESSURE TREATED PER LP2. A QUALITY CONTROL STAMP IS NOT REQUIRED FOR STRUCTURAL MEMBERS BELOW THE SUB FLOOR THAT ARE NOT PART OF THE FOUNDATION.
13. IF MACHINE NAILING IS UTILIZED FOR THIS PROJECT, CONTRACTOR SHALL COMPLY WITH ALL REQUIREMENTS OF CCR TITLE 24, PART 2, SECTIONS 2311A.3.3. AND 2514A.3. MACHINE NAILING IS SUBJECT TO APPROVAL BY THE STRUCTURAL ENGINEER OR ARCHITECT AND THE DIVISION OF THE STATE ARCHITECT.
14. POWDER DRIVEN FASTENERS SHALL BE BY HILTI, INC., HILTI FASTENING SYSTEMS – OR EQUAL. INSTALL IN ACCORDANCE WITH DRAWINGS AND THE MANUFACTURER'S RECOMMENDATIONS AND ICBO APPROVALS.

CONCRETE:

1. CONCRETE SHALL DEVELOP A MINIMUM ULTIMATE COMPRESSIVE STRENGTH OF 3000 PSI AT 28 DAYS IN ACCORDANCE WITH ASTM C31 AND C39. TESTING SHALL BE IN ACCORDANCE WITH CBC (CCR TITLE 24, PART 2) SECTION 1905A.6. THREE CYLINDERS FOR STRENGTH TESTS OF EACH CLASS OF CONCRETE PLACED EACH DAY SHALL BE TAKEN BY THE OWNER'S TESTING LABORATORY NOT LESS THAN ONCE A DAY, NOR LESS THAN ONCE FOR EACH 50 CUBIC YARDS OF CONCRETE PLACED. PROVIDE 6% ENTRAINED AIR BY VOLUME WITH ADMIXTURE PER ASTM C260 FOR SITES ABOVE 1500 FEET IN ELEVATION, SEE ALSO CBC SECTION 1904A.2.
2. ALL CONCRETE SHALL BE CONSOLIDATED BY MECHANICAL VIBRATORS.
3. ALL CONCRETE WORK SHALL CONFORM TO THE REQUIREMENTS OF THE CBC (CCR TITLE 24, PART 2) AND ACI STANDARD 318, LATEST EDITION, OF THE AMERICAN CONCRETE INSTITUTE, UNLESS SHOWN OR NOTED OTHERWISE ON THESE DRAWINGS.
4. AGGREGATE SHALL CONFORM TO ASTM C33 AND CBC SECTION 1903A.3. GRADING OF COMBINED AGGREGATE SHALL BE PER TITLE 24, PART 2, TABLE 19A-J. (1" MAX. AGGREGATE).
5. CEMENT SHALL BE ASTM C150, TYPE I OR TYPE II. SEE ALSO REQUIREMENTS OF CBC SECTION 1903A.2.
6. REINFORCING STEEL SHALL BE DEFORMED CONFORMING TO ASTM A615 GRADE 40 UNLESS OTHERWISE NOTED.
7. WELDED WIRE FABRIC REINFORCEMENT SHALL CONFORM TO ASTM A185.
8. WELDING OF REINFORCING STEEL SHALL BE PERFORMED ONLY WHERE INDICATED ON THE DRAWINGS AND SHALL BE IN COMPLIANCE WITH ALL REQUIREMENTS OF THE CBC, UBC STANDARD 19-2 AND THE REINFORCING STEEL WELDING CODE, AWS D1.4, LATEST REVISION, OF THE AMERICAN WELDING SOCIETY. PROVIDE WELDING PROCEDURE AND MILL TEST REPORTS FOR ALL REINFORCEMENT TO BE WELDED. REINFORCING WITH C.E. ABOVE .75 SHALL NOT BE WELDED. ARCHITECT SHALL APPROVE WELDING PROCEDURE, WELDER QUALIFICATIONS AND MILL TEST REPORTS PRIOR TO EXECUTION OF WELDING. PROVIDE INSPECTION PER SECTION 1928A.12, TITLE 24, PART 2.
9. COVERAGE FOR REINFORCING BARS SHALL BE IN ACCORDANCE WITH THE REQUIREMENTS OF THE CBC AND ACI STANDARD 318 UNLESS SHOWN OTHERWISE ON THE DRAWINGS.
10. LAP SPLICES FOR REINFORCING BARS SHALL BE 50 BAR DIAMETERS OR 18" MINIMUM UNLESS SHOWN OTHERWISE ON THE DRAWINGS. WIRE BARS TOGETHER AT LAPS OR SPLICES. STAGGER LAPS IN ADJACENT HORIZONTAL OR SLOPING REINFORCING BARS A MINIMUM OF THE REQUIRED SPLICE LENGTH. HOOKS AND BENDS SHALL BE CBC STANDARD PER CCR TITLE 24, PART 2, SECTION 1907A.1 THROUGH 1907A.3 UNLESS SHOWN OTHERWISE. WELDED WIRE FABRIC SHALL BE SPLICED BY LAPPING A MINIMUM OF 12 INCHES OR TWO CROSS WIRES, WHICHEVER IS GREATER.
11. CONCRETE SHALL BE PLACED IN ACCORDANCE WITH ASTM C94 (UBC STANDARD 19-3) AND ACI STANDARD 304. ALSO COMPLY WITH REQUIREMENTS OF CCR TITLE 24, PART 2, SECTION 1905A.
12. ALL EMBEDDED ITEMS SHALL BE PLACED ACCURATELY AND SECURED <u>PRIOR TO BEGINNING</u> CONCRETE PLACEMENT.
13. CONSTRUCTION JOINTS SHALL BE LOCATED SO AS NOT TO IMPAIR THE STRENGTH OF THE STRUCTURE. CONSTRUCTION JOINTS SHALL COMPLY WITH CBC SECTION 1906A.4. LOCATE CONSTRUCTION JOINTS AS SHOWN ON THE DRAWINGS OR APPROVED IN ADVANCE BY THE STRUCTURAL ENGINEER AND DSA.
14. PROVIDE SHOP DRAWINGS FOR ALL REINFORCING STEEL TO ARCHITECT FOR REVIEW AND APPROVAL PRIOR TO BEGINNING ANY FABRICATION.
15. CONTRACTOR SHALL PREPARE AND SUBMIT CONCRETE MIX DESIGNS TO THE ARCHITECT FOR APPROVAL PRIOR TO PLACEMENT OF ANY CONCRETE. CONCRETE MIX DESIGNS SHALL BE PER CBC SECTION 1905A.2, METHOD A (TABLE 19A-A-7). [ALTERNATE MIX DESIGN: METHOD B OR C MAY BE USED PER CBC SECTION 1905A.2 THROUGH 1905A.3. METHOD B OR C MIX DESIGNS SHALL BE SIGNED BY A CIVIL ENGINEER LICENSED IN CALIFORNIA.]
16. ALL GROUT SHALL BE NONMETALLIC NON-SHRINK HIGH STRENGTH GROUT BY MASTER BUILDERS OR EQUIVALENT AS APPROVED BY THE ARCHITECT. UTILIZE PRODUCTS RECOMMENDED BY THE MANUFACTURER FOR EACH APPLICATION AND INSTALL PER MANUFACTURER'S RECOMMENDATIONS.
17. REINFORCING AND EMBEDMENT ITEMS SHALL BE FREE OF EXCESSIVE SCALE OR RUST, DIRT, GREASE, OIL OR ANY OTHER SUBSTANCE THAT WILL IMPAIR BOND WITH CONCRETE.
18. OWNER SHALL PROVIDE INSPECTIONS IN ACCORDANCE WITH CCR TITLE 24 FOR THE PLACEMENT OF CONCRETE AND CONCRETE REINFORCEMENT, FOR BOLTS INSTALLED IN CONCRETE AND FOR SAMPLING CONCRETE. OWNER'S INSPECTOR SHALL PROVIDE INSPECTION REPORTS TO THE ARCHITECT AND THE DIVISION OF THE STATE ARCHITECT.
19. ADDITIONALLY, PROVIDE TESTS AND INSPECTIONS IN ACCORDANCE WITH TITLE 24, PART 2, SECTION 1928A. A PLACING RECORD SHALL BE MAINTAINED FOR ALL CONCRETE PLACED IN THE STRUCTURE.
20. BATCH PLANT INSPECTION, CEMENT AND REINFORCING TESTS ARE NOT REQUIRED. THE QUANTITIES OF CONCRETE MATERIALS SHALL BE CERTIFIED BY A LICENSED WEIGHMASTER AND THE QUALITY OF MATERIALS SHALL BE VERIFIED BY THE OWNER'S TESTING AGENCY. COMPLY WITH ALL REQUIREMENTS OF TITLE 24, PART 2, SECTIONS 1928A.5.2 AND 1928A.6.
21. ALL CONCRETE WORK SHALL BE FORMED. CASTING OF FOUNDATION CONCRETE AGAINST SIDES OF FOOTING EXCAVATIONS SHALL NOT BE ALLOWED EXCEPT AS SPECIFICALLY APPROVED BY ARCHITECT, STRUCTURAL ENGINEER AND THE DIVISION OF THE STATE ARCHITECT.
22. MAX. CONC. SLUMP TO BE 3"

CONCRETE FOUNDATION:

1. FOUNDATION BEARING SHALL BE AS APPROVED BY THE DIVISION OF THE STATE ARCHITECT AND THE OWNER'S ARCHITECT. IT IS THE SCHOOL DISTRICT'S RESPONSIBILITY TO PROVIDE ADEQUATE BEARING TO DEVELOP THE ALLOWABLE BEARING PRESSURE NOTED BELOW.
2. FOUNDATIONS ARE DESIGNED FOR A MAXIMUM DEAD PLUS LIVE LOAD ALLOWABLE SOIL BEARING PRESSURE OF 1000 PSF, AS PER TITLE 24, TABLE 18A-I-A.
3. THE BOTTOM OF ALL FOOTINGS SHALL BE LEVEL. CHANGES IN FOOTING ELEVATIONS SHALL BE MADE UTILIZING THE TYPICAL FOOTING STEP DETAILS ON THESE DRAWINGS.
4. CENTER FOOTINGS UNDER WALLS OR COLUMNS UNLESS OTHERWISE INDICATED ON THESE DRAWINGS.
5. PROVIDE PROPER GRADING OF SITE SUCH THAT WATER DOES NOT POND OR OTHERWISE COLLECT UNDER THE BUILDING.
6. FOUNDATIONS ARE DESIGNED AS FIXED FOUNDATIONS IN ACCORDANCE WITH TITLE 24, CHAPTER 18A. (REFERENCE IR 23-6)
   A. ALL BUILDINGS, PERMANENT OR OTHER RELOCATABLE, ADJACENT TO THESE RELOCATABLE BUILDINGS MUST BE SEPARATED FROM THESE RELOCATABLE BUILDINGS BY 2" MINIMUM.

STRUCTURAL STEEL:

1. ALL STRUCTURAL AND MISCELLANEOUS STEEL SHALL BE ASTM A36 UNLESS NOTED OTHERWISE.
2. TUBE MEMBERS SHALL BE ASTM A500 WITH MIN. YIELD STRESS OF 46,000 PSI., PIPE MEMBERS SHALL BE ASTM A53 WITH A MIN. YIELD STRESS OF 35,000 P.S.I.
3. UNLESS OTHERWISE NOTED, LIGHT GAUGE STEEL PLATE (10 GAUGE AND LESS) SHALL BE GALVANIZED AND PER THE REQUIREMENTS OF ASTM A36, ASTM A446 OR EQUAL WITH MINIMUM YIELD STRESS OF 33,000 PSI.
4. ALL BOLTS SHALL BE ASTM A307 MACHINE BOLTS UNLESS NOTED OTHERWISE.
5. ALL WELDING SHALL BE IN ACCORDANCE WITH THE REQUIREMENTS OF THE CALIFORNIA BUILDING CODE (CBC) AND THE STRUCTURAL WELDING CODE – STEEL, AWS D1.1, LATEST EDITION, OF THE AMERICAN WELDING SOCIETY. INSPECTION OF ALL WELDING SHALL BE PROVIDED, SEE NUMBER 8, BELOW.
6. FABRICATION AND ERECTION OF STRUCTURAL AND MISCELLANEOUS STEEL SHALL BE IN ACCORDANCE WITH THE REQUIREMENTS OF THE LATEST EDITION OF THE SPECIFICATION FOR STRUCTURAL STEEL BUILDINGS, ALLOWABLE STRESS DESIGN AND PLASTIC DESIGN, OF THE AMERICAN INSTITUTE OF STEEL CONSTRUCTION (AISC) (UBC CHAPTER 22, DIVISION IX). ALSO COMPLY WITH REQUIREMENTS OF THE AISC CODE OF STANDARD PRACTICE FOR STEEL BUILDINGS AND BRIDGES. (THERE ARE <u>NO</u> SELF-SUPPORTING FRAMES ON THIS PROJECT – TEMPORARY BRACING IS REQUIRED UNTIL ALL ELEMENTS SHOWN ON STRUCTURAL DRAWINGS ARE IN PLACE.)
7. PRIME ALL STEEL SURFACES WITH AN APPROVED PRIMER, EXCEPT SURFACES TO BE EMBEDDED IN CONCRETE AND SURFACES TO RECEIVE FIELD WELDS. TOUCH-UP FIELD WELDS AND OTHER EXPOSED STEEL SURFACES AFTER ERECTION. ALTERNATE: PROVIDE GALVANIZED PER ASTM STANDARDS.
8. PROVIDE TESTS AND INSPECTIONS IN ACCORDANCE WITH CCR TITLE 24, PART 2, SECTION 2212A (CBC). ALL STEEL SHALL BE PROPERLY IDENTIFIED PER SECTION 2212A.1.
9. WELDING SHOULD BE IN ACCORDANCE WITH IR-27-8 (REV. 10-25-95) SECTION K, ITEMS 1-8, 10-14, AND 18-23. SEE SHT. S-1A.

ABBREVIATIONS:

A.B.	ANCHOR BOLT	HCB	HOLLOW CONCRETE BLOCK
ABV.	ABOVE	HD	HOLDOWN
ADDL.	ADDITIONAL	HDR.	HEADER
ADJ.	ADJACENT	HK.	HOOK
ALT.	ALTERNATE	HORIZ.	HORIZONTAL
APPROX.	APPROXIMATE	H.S.	HIGH STRENGTH
ARCH.	ARCHITECTURAL	INFO.	INFORMATION
BLDG.	BUILDING	INTR.	INTERIOR
BLKG.	BLOCKING	INTRM.	INTERMEDIATE
BLW.	BELOW		
BM.	BEAM	JT.	JOINT
B.O.	BOTTOM OF	LCTN.	LOCATION
BOT.	BOTTOM		
B.S.	BOTH SIDES	MAX.	MAXIMUM
BTWN.	BETWEEN	MECH.	MECHANICAL
		MFR.	MANUFACTURER
C.J.	CONSTRUCTION JOINT	MIN.	MINIMUM
℄	CENTERLINE	MOD.	MODULE
CLG.	CEILING		
CLR.	CLEAR	(N)	NEW
CMU	CONCRETE MASONRY UNIT	N.S.	NEAR SIDE
COL.	COLUMN	N.T.S.	NOT TO SCALE
CONC.	CONCRETE		
CONSTR.	CONSTRUCTION	O.C.	ON CENTER
CONN.	CONNECTION	O.H.	OPPOSITE HAND/OVERHANG
CONT.	CONTINUOUS	OPNG.	OPENING
CP	COMPLETE PENETRATION	OPP.	OPPOSITE
CSK.	COUNTERSINK		
		PC.	PIECE
DBL.	DOUBLE	PL. (℘)	PLATE
DET.	DETAIL	PPT/PT	PRESSURE PRESERVATIVE TREATED
D.F.	DOUGLAS FIR		
DIAG.	DIAGONAL	P.W.	PLYWOOD
DIM.	DIMENSION		
D.O.	DITTO	REINF.	REINFORCEMENT
DRWG.	DRAWING	REQD.	REQUIRED
DIA., ø	DIAMETER	RWD.	REDWOOD
(E)	EXISTING	SHTHG.	SHEATHING
EA.	EACH	SIM.	SIMILAR
E.F.	EACH FACE	SQ.	SQUARE
E.J.	EXPANSION JOINT	STD.	STANDARD
ELEV.	ELEVATION	STG'D.	STAGGERED
E.N.	END NAIL	STIFF.	STIFFENER
EQ.	EQUAL	S.W.	SHEARWALL
EQUIP.	EQUIPMENT	SYM.	SYMMETRICAL
E.S.	EACH SIDE		
EXTR.	EXTERIOR	T&B	TOP & BOTTOM
E.W.	EACH WAY	T&G	TONGUE & GROOVE
		THRU	THROUGH
F.F.	FINISH FLOOR	T.N.	TOE NAIL
F.G.	FINISH GRADE	T.O.	TOP OF
FIN.	FINISH	T.O.C.	TOP OF CONCRETE
FLR.	FLOOR	T.O.S.	TOP OF STEEL
F.N.	FACE NAIL	TS	TUBE STEEL
FND.	FOUNDATION	TYP.	TYPICAL
F.O.C.	FACE OF CONCRETE		
F.O.M.	FACE OF MASONRY	U.O.N.	UNLESS OTHERWISE NOTED
F.O.S.	FACE OF STUD	VERT.	VERTICAL
F.S.	FAR SIDE		
FTG.	FOOTING	W/	WITH
GA.	GAGE	W.P.	WORK POINT
GALV.	GALVANIZED	WWF	WELDED WIRE FABRIC
G.L.	GRID LINE	WND.	WINDOW
GLB	GLU-LAM BEAM		
GYP. BD.	GYPSUM BOARD		

PAD FOUNDATIONS: (SLIDING)

1. FOUNDATION BEARING SHALL BE AS APPROVED BY THE DIVISION OF THE STATE ARCHITECT, AND THE OWNER'S ARCHITECT. IT IS THE SCHOOL DISTRICT'S RESPONSIBILITY TO PROVIDE ADEQUATE BEARING TO DEVELOP THE ALLOWABLE BEARING PRESSURE NOTED BELOW.
2. FOUNDATIONS ARE DESIGNED FOR A MAXIMUM DEAD PLUS LIVE LOAD ALLOWABLE SOIL BEARING PRESSURE OF 1000 PSF, AS PER IR 23-6.
3. THE BOTTOM OF ALL FOOTINGS SHALL BE LEVEL. CHANGES IN FOOTING ELEVATIONS SHALL BE MADE UTILIZING THE FOOTING SHIM DETAILS ON THESE DRAWINGS.
4. CENTER FOOTINGS UNDER WALLS OR COLUMNS UNLESS OTHERWISE INDICATED ON THESE DRAWINGS.
5. PROVIDE PROPER GRADING OF SITE SUCH THAT WATER DOES NOT POND OR OTHERWISE COLLECT UNDER THE BUILDING.
6. VERIFY THAT NO PIPES, UTILITIES, OR OTHER SUCH ITEMS OCCUR BELOW FOOTINGS.
7. FOUNDATIONS ARE DESIGNED AS "SLIDING FOUNDATION", IN ACCORDANCE WITH IR 23-6, TEMPORARY FOUNDATIONS.
   a. STAIRS AND RAMPS SHALL BE PROPERLY ANCHORED TO BUILDING TO PREVENT SEPARATION.
   b. ALL BUILDINGS, PERMANENT OR OTHER RELOCATABLE, ADJACENT TO THESE RELOCATABLE BUILDINGS MUST BE SEPARATED FROM THESE RELOCATABLE BUILDINGS BY 12" MINIMUM.
   c. ALL UTILITY CONNECTIONS MUST ALLOW FOR 12" MINIMUM HORIZONTAL MOVEMENT IN ANY DIRECTION WITHOUT DAMAGE.
8. FINISH GRADES SHALL BE WITHIN MAX. 14" BELOW BOTTOM OF FLOOR JOISTS, WITHOUT EXCEPTION.

PAD FOUNDATIONS: (RESTRAINED)

1. FOUNDATION BEARING SHALL BE AS APPROVED BY THE DIVISION OF THE STATE ARCHITECT, AND THE OWNER'S ARCHITECT. IT IS THE SCHOOL DISTRICT'S RESPONSIBILITY TO PROVIDE ADEQUATE BEARING TO DEVELOP THE ALLOWABLE BEARING PRESSURE NOTED BELOW.
2. FOUNDATIONS ARE DESIGNED FOR A MAXIMUM DEAD PLUS LIVE LOAD ALLOWABLE SOIL BEARING PRESSURE OF 1000 PSF, AS PER IR 23-6.
3. THE BOTTOM OF ALL FOOTINGS SHALL BE LEVEL. CHANGES IN FOOTING ELEVATIONS SHALL BE MADE UTILIZING THE FOOTING SHIM DETAILS ON THESE DRAWINGS.
4. CENTER FOOTINGS UNDER WALLS OR COLUMNS UNLESS OTHERWISE INDICATED ON THESE DRAWINGS.
5. PROVIDE PROPER GRADING OF SITE SUCH THAT WATER DOES NOT POND OR OTHERWISE COLLECT UNDER THE BUILDING.
6. VERIFY THAT NO PIPES, UTILITIES, OR OTHER SUCH ITEMS OCCUR BELOW FOOTINGS.
7. FOUNDATIONS ARE DESIGNED AS "RESTRAINED FOUNDATION", IN ACCORDANCE WITH IR 23-6, TEMPORARY FOUNDATIONS.
   a. ANCHOR FOOTINGS AT BUILDING PERIMETER WITH 1" ø GALVANIZED STANDARD STEEL PIPES DRIVEN FLUSH WITH TOP OF WOOD FOUNDATION PADS AND PENETRATING SOIL 12" MINIMUM AT A MAXIMUM SPACING OF 10'-0" O.C. AT SIDEWALLS AND AT EACH CORNER EACH MODULE AT ENDWALLS.
   b. STAIRS AND RAMPS SHALL BE PROPERLY ANCHORED TO BUILDING TO PREVENT SEPARATION.
   c. ALL BUILDINGS, PERMANENT OR OTHER RELOCATABLE, ADJACENT TO THESE RELOCATABLE BUILDINGS MUST BE SEPARATED FROM THESE RELOCATABLE BUILDINGS BY 2" MINIMUM.
8. FINISH GRADES SHALL BE WITHIN MAX. 18" BELOW BOTTOM OF FLOOR JOISTS, WITHOUT EXCEPTION.

TYPICAL DETAILS:

NOTE: ALL BARS BENT COLD – NO FIELD BENDING ALLOWED.

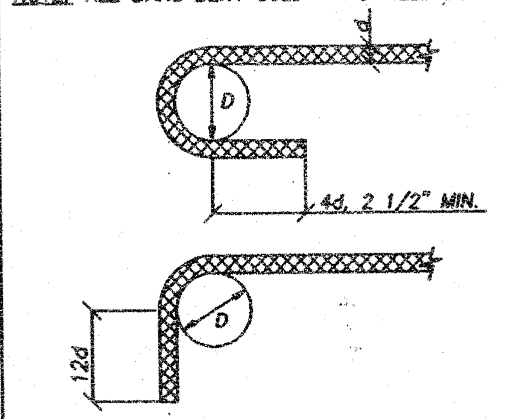

INSIDE BEND DIAMETERS

BAR SIZE	D
#3 TO #8	6d
#9, #10, #11	8d
#14, #18	10d

TYPICAL (U.O.N.)

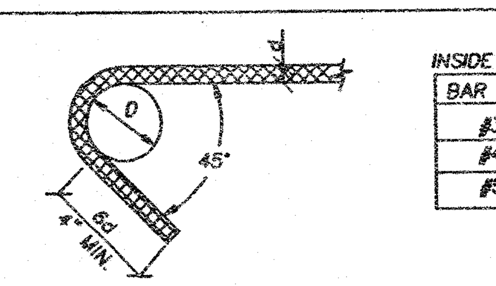

INSIDE BEND DIAMETERS

BAR SIZE	D
#3	1 1/2"
#4	2"
#5	2 1/2"

STIRRUPS & TIES

(A / S-1) STD HOOKS AND BENDS IN REINF. STEEL (05/25/93)

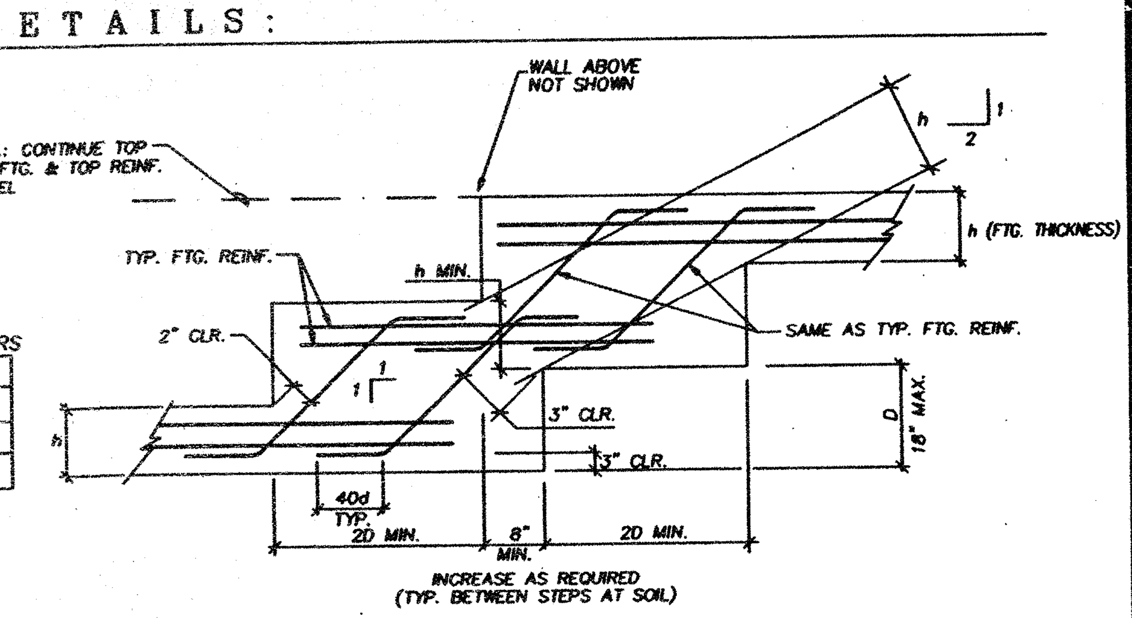

@ MOD. ℄

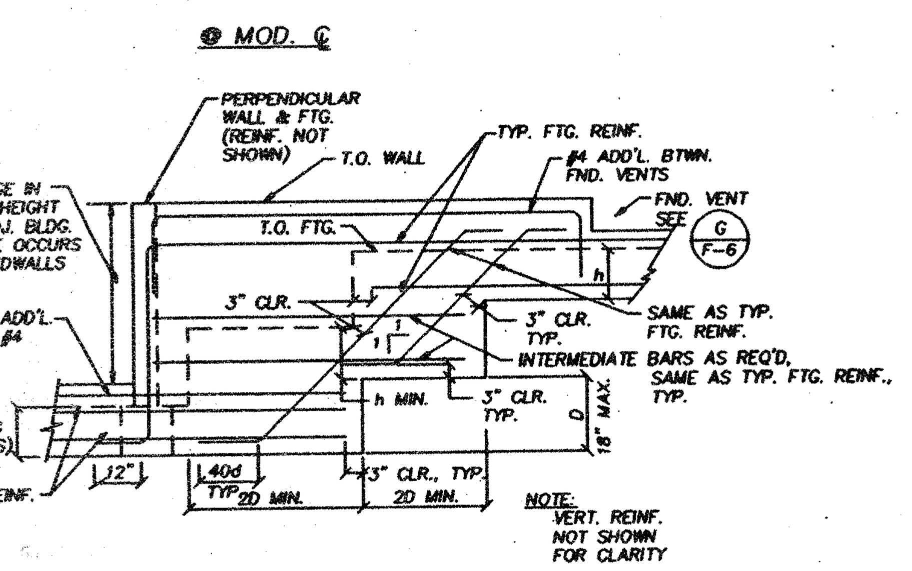

AT ENDWALL / SIDEWALL

(B / S-1) STEP FOOTING DETAIL (11/05/92)

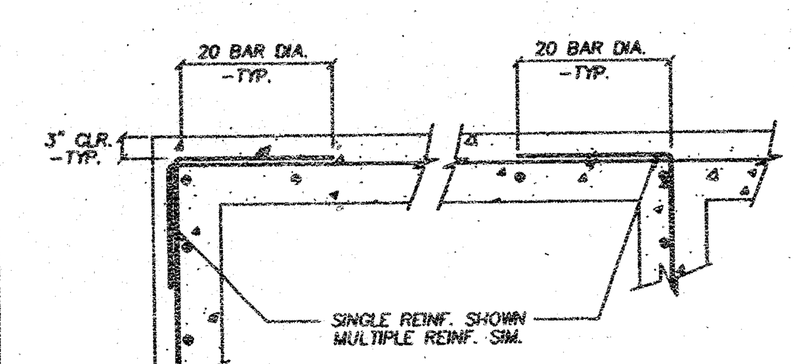

(C / S-1) CONC. REINF. DETAIL (11/04/92)

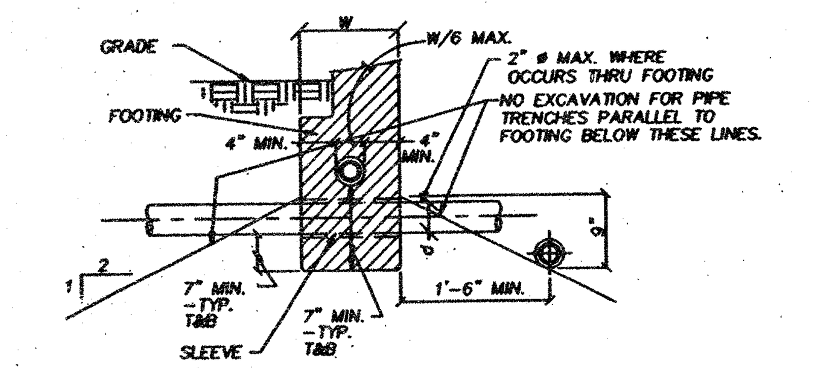

NOTE: ALL PIPES TO CLR. SLEEVES BY 1" ALL AROUND –CAULK AS REQ'D.

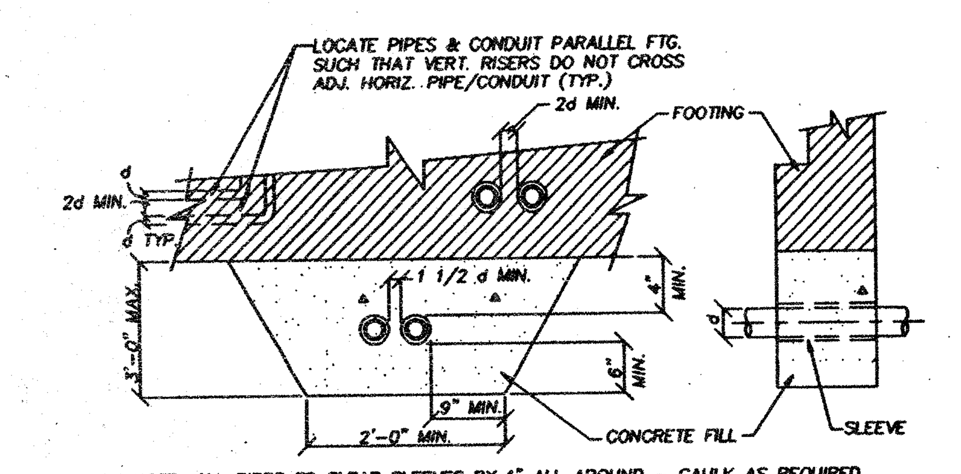

NOTE: ALL PIPES TO CLEAR SLEEVES BY 1" ALL AROUND – CAULK AS REQUIRED. PIPE NEVER TO BE MORE THAN 2'-6" BELOW BOTTOM OF FOOTING; STEP FOOTING IF REQUIRED PER TYPICAL STEP DETAILS.

(D / S-1) PIPES AT FOOTINGS (12/03/91)

POWER DRIVEN SHOT PINS (LOW VELOCITY)

SHOT PINS MAY BE USED FOR SHEAR LOADS AND THEY MAY BE USED IN TENSION TO SUPPORT LOADS LESS THEN 100 POUNDS LIKE ACOUSTICAL CEILINGS, DUCT WORK, CONDUIT, ECT. ANY SHOT ANCHORS MUST HAVE ICBO APPROVAL FOR THE TYPE OF CONCRETE USED ON THE JOB. SHOT PINS MAY NOT BE USED IN CONCRETE CURBS.

THE ALLOWABLE LOADS SHALL BE 100 POUNDS OR 80% OF ICBO APPROVED VALUES, WHICHEVER IS LESS. QUALIFICATION FOR USE OF ALL POWER ACTUATED TOOLS MUST MEET ANSI A10.3 STANDARD AS REQUIRED BY THE MANUFACTURER AND ALL OSHA REQUIREMENTS.

TESTING – THE OPERATOR, TOOL, AND FASTENER SHALL BE PRE-QUALIFIED BY THE PROJECT INSPECTOR. HE SHALL OBSERVE THE TESTING OF THE FIRST 10 FASTENER INSTALLATIONS. A TEST "PULL-OUT" LOAD OF NOT LESS THAN TWICE THE DESIGN LOAD SHALL BE APPLIED TO THE PIN IN SUCH A MANNER AS NOT TO RESIST THE SPALLING TENDENCY OF THE CONCRETE SURROUNDING THE PIN. THEREAFTER, RANDOM TEST UNDER THE PROJECT INSPECTOR'S SUPERVISION SHALL BE MADE OF APPROXIMATELY 1 IN 10 PINS. IF ANY PIN FAILS TESTING, TEST ALL PINS OF THE SAME CATEGORY NOT PREVIOUSLY TESTED UNTIL TWENTY (20) CONSECUTIVE PASS, THEN RESUME THE INITIAL TESTING FREQUENCY.

MACHINE APPLIED NAILING

USE OF MACHINE NAILING IS SUBJECT TO A SATISFACTORY JOBSITE DEMONSTRATION FOR EACH PROJECT AND THE APPROVAL BY THE PROJECT ARCHITECT OR STRUCTURAL ENGINEER AND THE OFFICE OF THE STATE ARCHITECT. THE APPROVAL IS SUBJECT TO CONTINUED SATISFACTORY PERFORMANCE. MACHINE NAILING WILL NOT BE APPROVED IN 5/16" PLYWOOD. IF NAILHEADS PENETRATE THE OUTER PLY MORE THAN WOULD BE NORMAL FOR A HAND HAMMER OR IF MINIMUM ALLOWABLE EDGE DISTANCES ARE NOT MAINTAINED THE PERFORMANCE WILL BE DEEMED UNSATISFACTORY AND MACHINE NAILING SHALL BE DISCONTINUED. (REFERENCE – TITLE 24, PART 2, SEC. 2314A.3)

THIS DRAWING AND THE MATERIAL CONTAINED THEREIN ARE THE PROPERTY OF M.S.I. INC. AND SHALL NOT BE REPRODUCED, COPIED OR OTHERWISE DISPOSED OF DIRECTLY OR INDIRECTLY AND SHALL NOT BE USED IN WHOLE OR IN PART TO ASSIST IN THE MAKING OF OR FOR THE PURPOSE OF FURNISHING ANY INFORMATION FOR THE MAKING OF DRAWINGS, PRINTS APPARATUS OR PARTS THEREOF WITHOUT THE FULL KNOWLEDGE AND WRITTEN CONSENT OF M.S.I. INC. ALL PATENTABLE MATERIAL CONTAINED HEREIN AND ORIGINATING WITH M.S.I. INC. SHALL BE THE PROPERTY OF M.S.I. INC. MATERIAL CONTAINED HEREIN AND ORIGINATING WITH M.S.I. INC. SHALL BE THE PROPERTY OF M.S.I. INC.

MSI
MODULAR STRUCTURES INTERNATIONAL, INC.
920 CITRUS AVE. RIVERSIDE, CALIFORNIA. 92507
PHONE: (909) 788-3035 FAX: (909) 788-1523

PC-100073

ARCHITECT APPROVAL

STRUCTURAL ENGINEERS STAMP

REGISTERED PROFESSIONAL ENGINEER – JAMES T. SIMPSON – No. 3602 – STRUCTURAL – STATE OF CALIFORNIA
LICENSE EXPIRES 6-30-2000

STATE AGENCY APPROVAL

AGENCY TRACKING NO. 63321-154
FILE NO. 15-6
IDENTIFICATION STAMP DIV. OF THE STATE ARCHITECT OFFICE OF REGULATION SERVICES
03-117035
AC / FLS \ SS 84
DATE 6/28/2016

STATE AGENCY APPROVAL

IDENTIFICATION STAMP DIV. OF THE STATE ARCHITECT OFFICE OF REGULATION SERVICES
4 00118
AC FLS SS
DATE JAN 1 5 1998

STATE AGENCY APPROVAL

IDENTIFICATION STAMP DIV. OF THE STATE ARCHITECT OFFICE OF REGULATION SERVICES
PC 100073
AC FLS SS
DATE JAN 1 5 1998

PROJECT: 24'X40', 36'X40', & 48'X40' MODULAR CLASSROOM BUILDING

TITLE: STRUCTURAL GENERAL NOTES

JOB #	
DATE	1-9-98
DRAWN BY	R.D.L.
SCALE	NONE
APPROVED	
REVISIONS	

SHEET NO. S-1