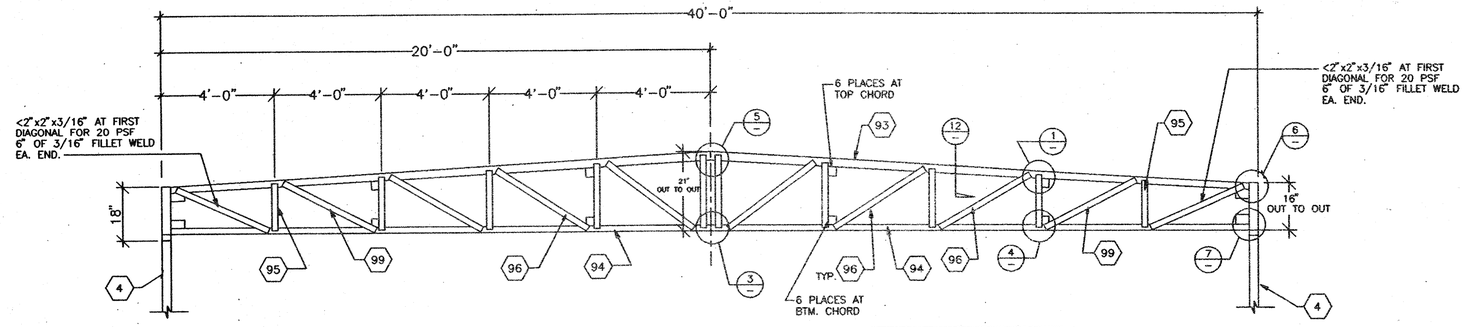

TRUSS ELEVATION

CAMBER TRUSS 1/2" @ MIDSPAN

A

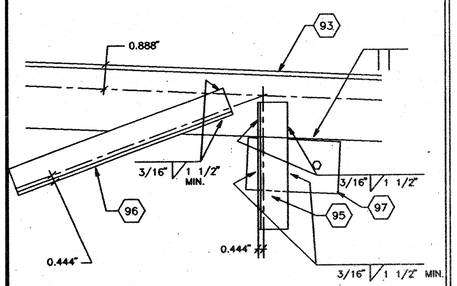

VERT. & DIAG. TOP CHORD 1

2

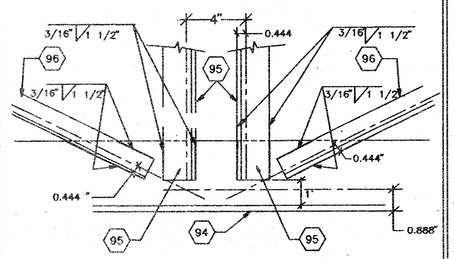

BOTTOM CHORD AT MIDSPAN 3

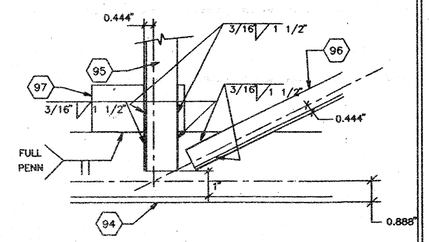

VERT & DIAG TO BOTTOM CHORD 4

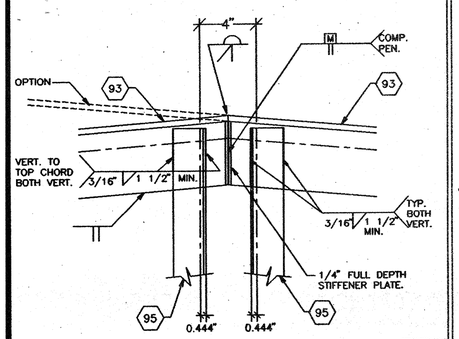

TOP CHORD AT MIDPOINT 5

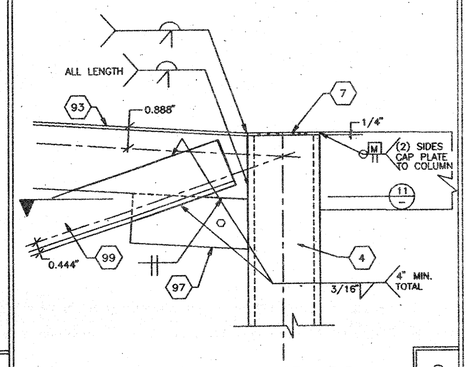

POST CONN TO TRUSS 6

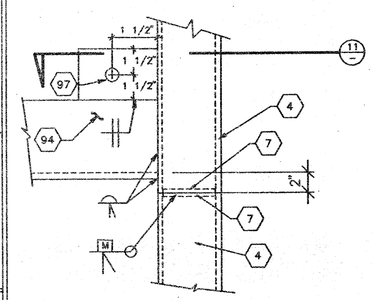

POST CONN TO TRUSS 7

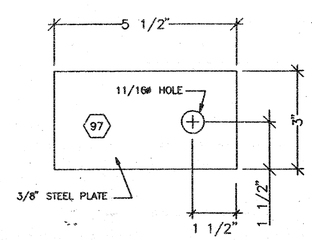

TIE PLATES 8

9

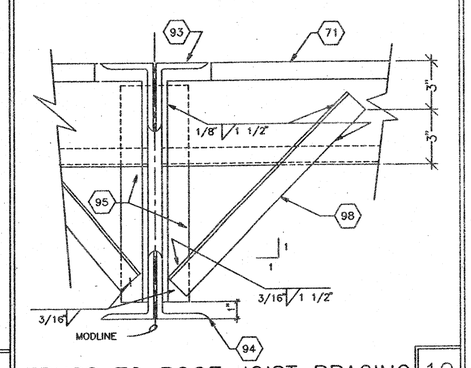

TRUSS TO ROOF JOIST BRACING 10

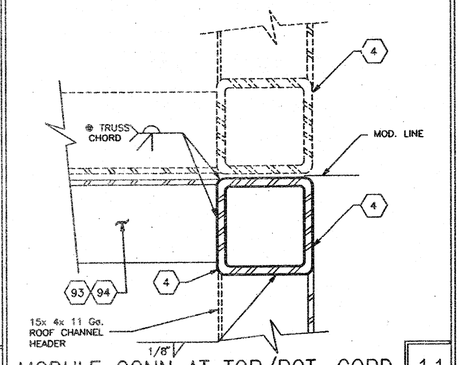

MODULE CONN AT TOP/BOT. CORD 11

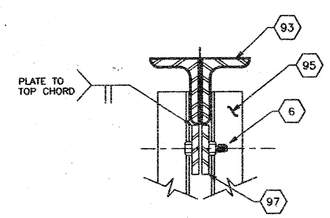

MODULE CONNECTION 12

20# ROOF

KEYNOTES

4. 3 1/2"x3 1/2"x3/16" STEEL TUBE
6. 5/8" MACHINE BOLT FOR MODULE CONNECTION
7. 1/4" CAP PLATE
71. ROOF JOIST
93. ∠ 3"x3"x3/8" TOP CHORD.
94. ∠ 3"x3"x3/8" 1/2" CHAMBER AT MIDPOINT FOR 20 PSF ROOF OR ∠ 4"x3"x3/8" 1/2" CHAMBER AT MIDPOINT FOR 30 PSF ROOF
95. ∠ 1 1/2"x1 1/2"x3/16" VERTICAL MEMBER
96. ∠ 1 1/2"x 1 1/2"x 3/16" DIAGONAL MEMBER TYP. (WITH 4" OF 3/16" FILLET WELD AT EA. END OF DIAGONAL & VERTICAL FOR 30 PSF ROOF, 3" OF FILLET WELD AT 20 PSF ROOF)
97. 3/8"x3"x5 1/2" PLATE WITH 11/16" HOLE FOR 5/8" MACHINE BOLT LOCATE PLATES @ 8'-0" O.C. FOR MODULE CONNECTION. SEE DETAIL 8.
98. 1 1/2"x1 1/2"x3/16" BRACE @ EVERY OTHER JOIST
99. 1 1/2"x 1 1/2"x 3/16" DIAGONAL (WITH 4" OF 3/16" FILLET WELD EACH END)

THIS DRAWING AND THE MATERIAL CONTAINED THEREIN IS THE PROPERTY OF M.S.I. INC. AND SHALL NOT BE REPRODUCED, COPIED OR OTHERWISE DISPOSED OF DIRECTLY OR INDIRECTLY AND SHALL NOT BE USED IN WHOLE OR IN PART FOR ANY PURPOSE OR FOR THE PURPOSE OF FURNISHING ANY INFORMATION OR FOR THE MAKING OF DRAWINGS, PRINTS OR MODELS FOR THE MANUFACTURE OF ANYTHING WITHOUT THE EXPRESS AND WRITTEN CONSENT OF M.S.I. INC. ALL PATENTABLE IDEAS, INVENTIONS, DISCOVERIES, KNOWLEDGE OF THE MATERIAL CONTAINED HEREIN ARE THE PROPERTY OF M.S.I. INC. MATERIAL CONTAINED HEREIN AND ORIGINATING WITH M.S.I. INC. SHALL BE THE PROPERTY OF M.S.I. INC.

MSI
MODULAR STRUCTURES INTERNATIONAL, INC.
920 CITRUS AVE. RIVERSIDE, CALIFORNIA 92507
PHONE: (909) 788-3035 FAX: (909) 788-1523

PC-100073

ARCHITECT APPROVAL

STRUCTURAL ENGINEERS STAMP

REGISTERED PROFESSIONAL ENGINEER JAMES T. SIMPSON No. 3602 STRUCTURAL STATE OF CALIFORNIA
LICENSE EXPIRES 6-30-

STATE AGENCY APPROVAL

AGENCY TRACKING NO. 63321-154
FILE NO. 15-6
IDENTIFICATION STAMP DIV. OF THE STATE ARCHITECT OFFICE OF REGULATION SERVICES 03-117095 AC FLS SS DATE 6/27/2016

STATE AGENCY APPROVAL

IDENTIFICATION STAMP DIV. OF THE STATE ARCHITECT OFFICE OF REGULATION SERVICES 4 100118 AC FLS 86 DATE JAN 15 1998

STATE AGENCY APPROVAL

IDENTIFICATION STAMP DIV. OF THE STATE ARCHITECT OFFICE OF REGULATION SERVICES 1100073 AC FLS 86 DATE JAN 15 1998

PROJECT
24'X40', 36'X40', & 48'X40' MODULAR CLASSROOM BUILDING

TITLE
STEEL TRUSS SECTION DETAILS FOR DOUBLE PITCH ROOF

JOB #

DATE 1-9-98

DRAWN BY R.D.L.

SCALE NONE

APPROVED

REVISIONS

SHEET NO.
S-70