130385

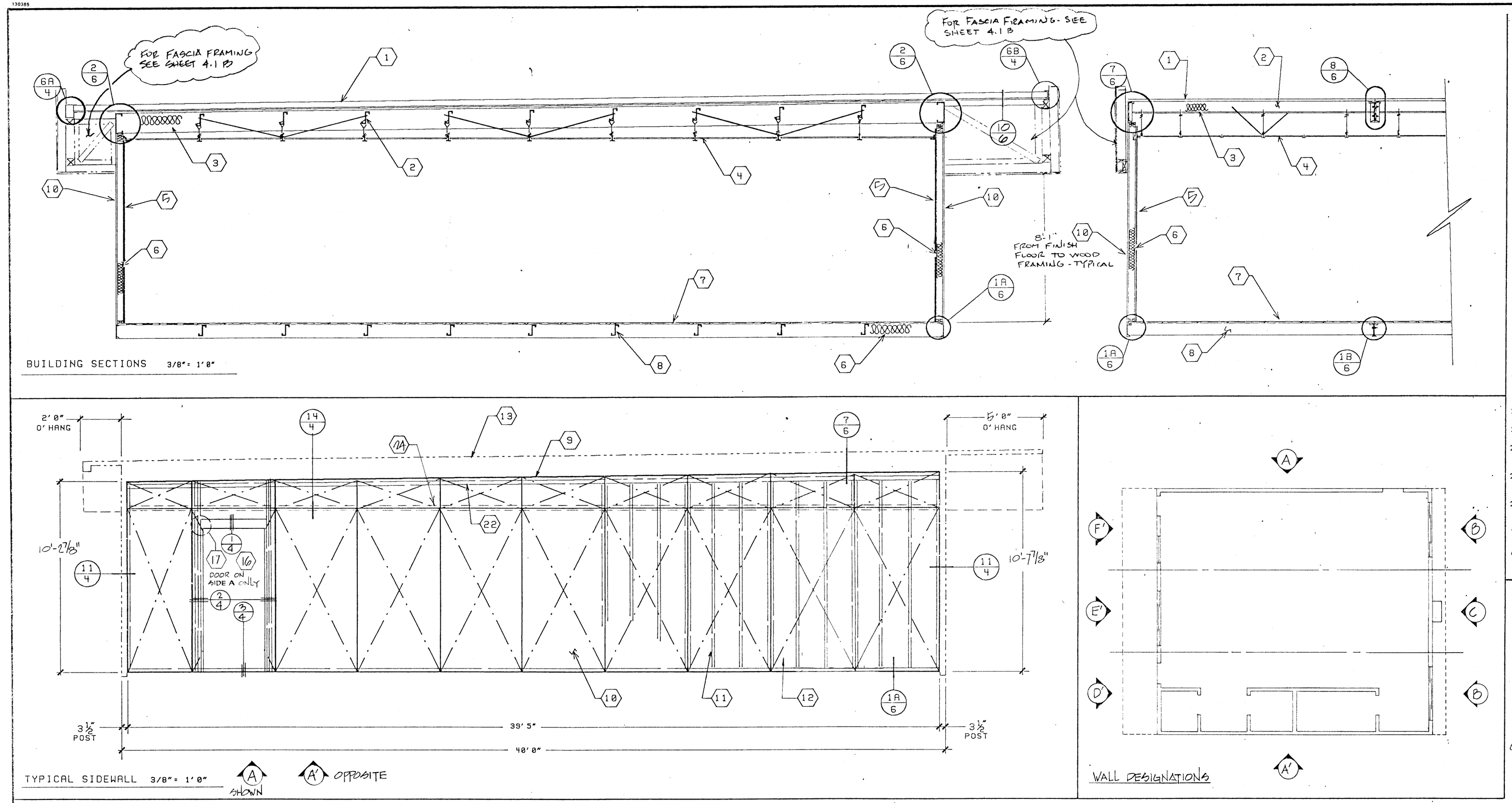

BUILDING SECTIONS 3/8" = 1' 0"

TYPICAL SIDEWALL 3/8" = 1' 0"

WALL DESIGNATIONS

1. ROOF SHEATHING- SEE NOTE 1:6.
2. STEEL ROOF JOIST- SEE NOTE 8:5.
3. R-19 FIBERGLASS INSULATION ON METAL STRAPS. MAX. FLAMESPREAD 25; MAX. SMOKE DENSITY 450.
4. SUSPENDED CEILING- SEE SHEET 7.
5. TYP. INT. FINISH- SEE NOTE 2:1
6. R-11 FIBERGLASS INSULATION MAX. FLAMESPREAD 25; MAX. SMOKE DENSITY 450.
7. PLYWOOD FLOOR SHEATHING- SEE NOTE 2:5.
8. STEEL FLOOR JOIST- SEE NOTE 8:5.
9. 2x6 TOP PLATE- D.F. #2 & BETTER CONTINUOUS
10. PLYWOOD SIDING/SHEATHING- SEE NOTE 1:1 FOR MATERIAL. NAIL SIDING WITH CORROSION RESISTANT 8d BOX NAILS @ 6" BOUNDARY & EDGES, 12" FIELD.
11. STUDS- 2x4 #2 & BETTER @ 16" O.C.
12. TOP OR BOTTOM PLATE- 2x4 D.F. STD & BTR
13. STEEL FRAME- SEE SHEET 5 "STRUCTURAL ELEVATIONS" FOR MEMBER TYPES AND SIZES.
14. WINDOW HEADER-4x6 D.F. #2
15. FRAME FOR 8'0"x 4'0" WINDOW. USE (4) FULL HEIGHT DOUG FIR 2x4 STUDS WITH (1) 2x4 TRIMMER BOTH SIDES AND (2) 2x4 FLAT FOR WINDOW SILL.
16. FRAME FOR 3'0"x 7'-0" DOOR. USE (3) FULL HEIGHT 2x4 JAMB STUDS WITH (1) 2x4 TRIMMER BOTH SIDES, & (1) 4x4 HEADER. SEE DETAIL 1:4.
17. NAIL THRU VERTICAL INTO HORIZONTAL HEAD OR SILL WITH MIN. (4) 16d NAILS PER CONNECTION. TYPICAL AT CORNERS OF ALL OPENINGS.
18. 4x4 D.F POST
19. A/C FRAMING IS FOR (4) TON WALL MOUNTED UNIT
20. 'SIMPSON' A35 CLIPS (4) PLACES TO TOP AND BOTTOM PLATES.
21. 'SIMPSON' A35 CLIPS (4) PLACES TO WINDOW SILL AND HEADER.
22. 2x4 PLATE- D.F. STD & BETTER. INTERNAIL TO 2x6 TOP PLATE WITH 16d BOX NAILS @ 16" O.C.: LAP SPLICES MINIMUM 4'0".
23. FRAME FOR 4'-0"x4'-0" WINDOW. USE 3 FULL HEIGHT STUDS EACH SIDE W/ 1 TRIMMER EACH SIDE
24. 2x4 FLAT BLOCKING @ HORIZ. PANEL SPLICE.

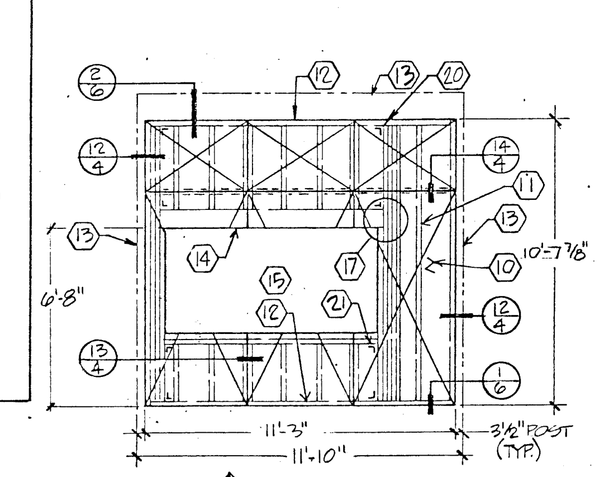

WALL E 1/4" = 1'-0"

E' OPPOSITE

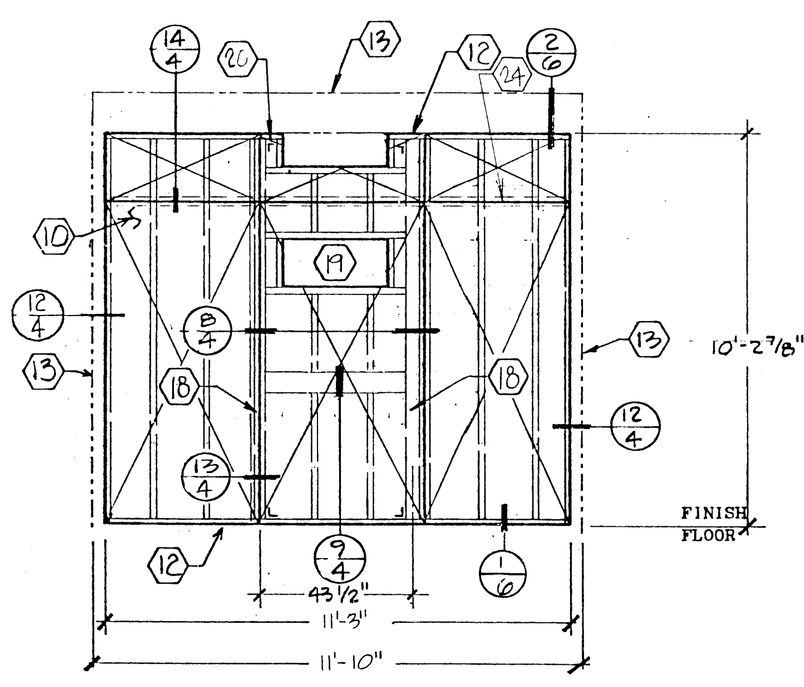

WALL C

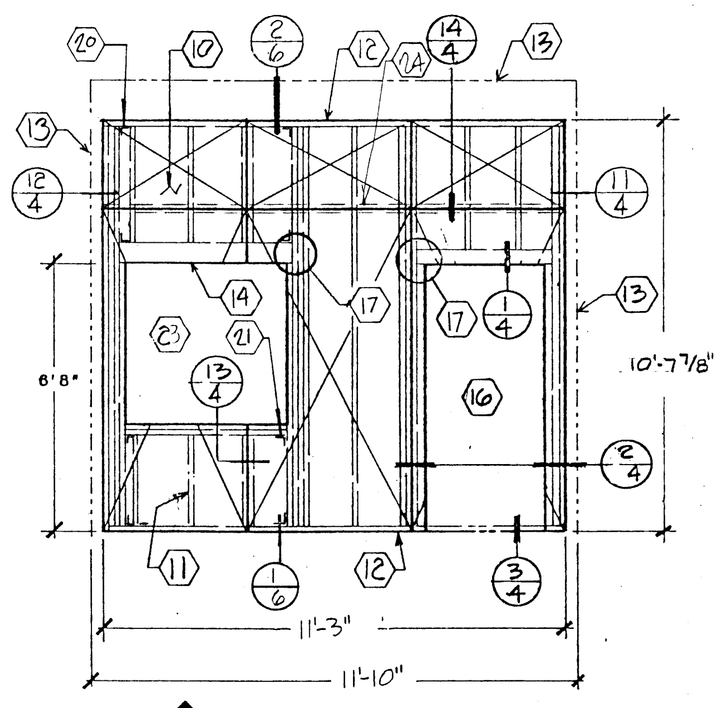

WALL F SHOWN

F' OPPOSITE HAND

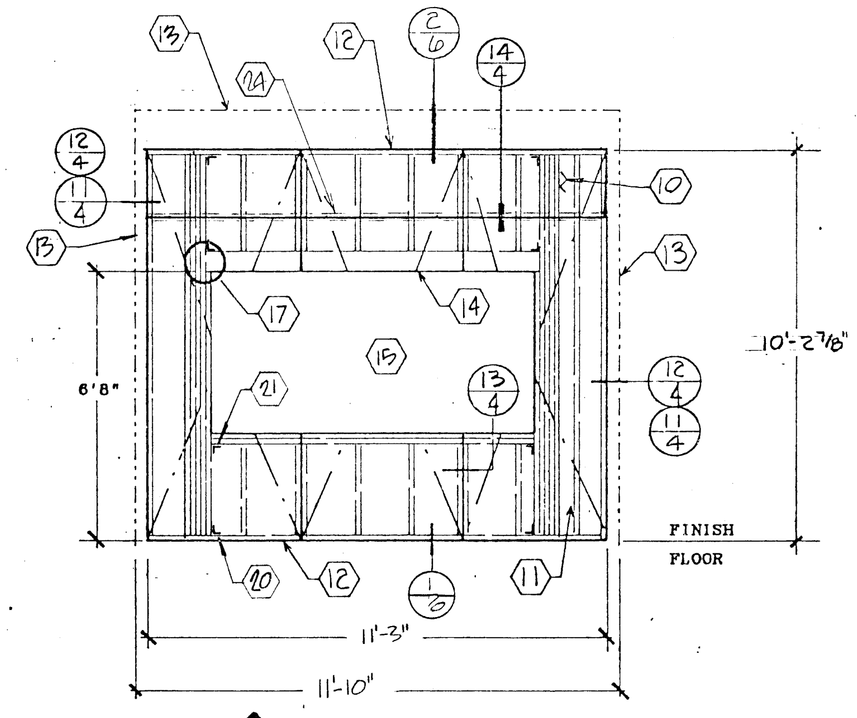

WALL B

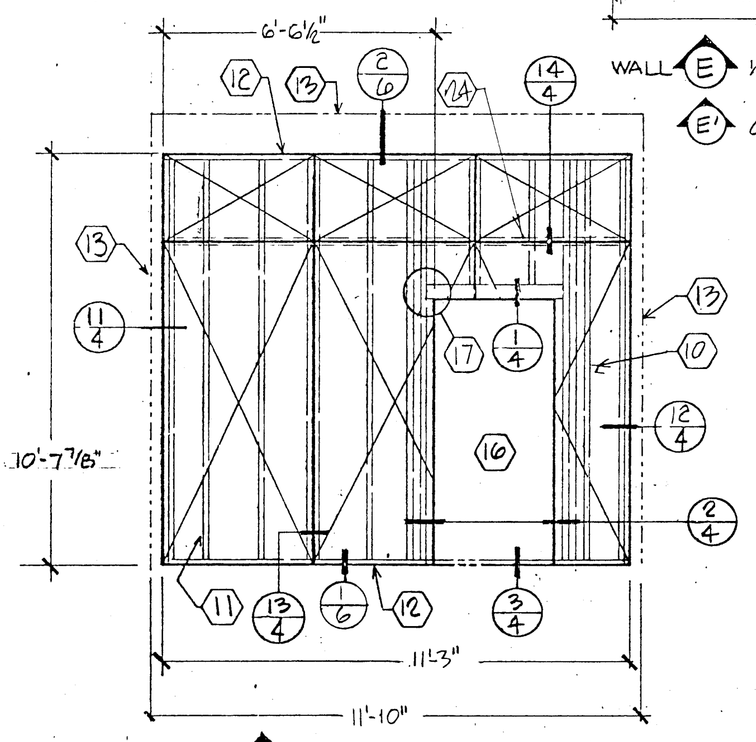

WALL D SHOWN

D' OPPOSITE HAND

OSA

ACS

FIRE MARSHAL

APPROVED FIRE AND PANIC DUTY
APR 23 1991
BY

AURORA MODULAR INDUSTRIES
1320 W. Oleander Ave.
Perris, California 92370
Phone • (714) 943-2071

RELOCATABLE CLASSROOM BUILDING FOR
PERRIS UNIFIED SCHOOL DISTRICT
BAKER/PTEC CITY
HAYSIDE SCHOOL

BUILDING SECTIONS & TYPICAL WALLS

By | Date 4-11-91

SHEET

3

© 1987 Aurora Modular Industries

9-11-90 11-2-90 #3278