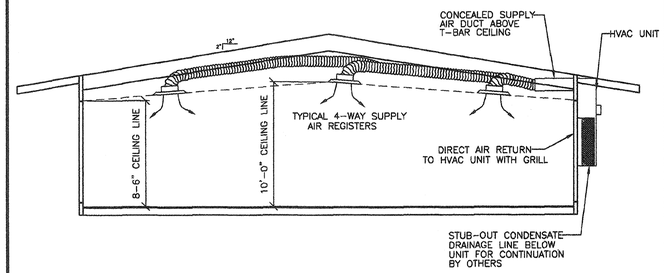

1 M2 TYPICAL MECHANICAL DETAIL SECTION
3/16"=1'-0"

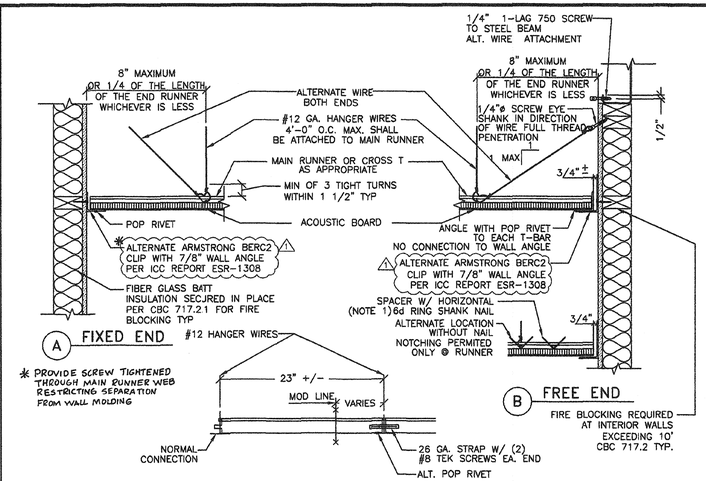

NOTE 1
NAILS AT THE END OF HORIZONTAL STRUTS ARE TO BE PLACED WITH NAIL HEAD TOWARD ℄ OF SPACE OF STRUT

2 M2 CEILING ATTACHMENTS DETAILS
1 1/2"=1'-0"

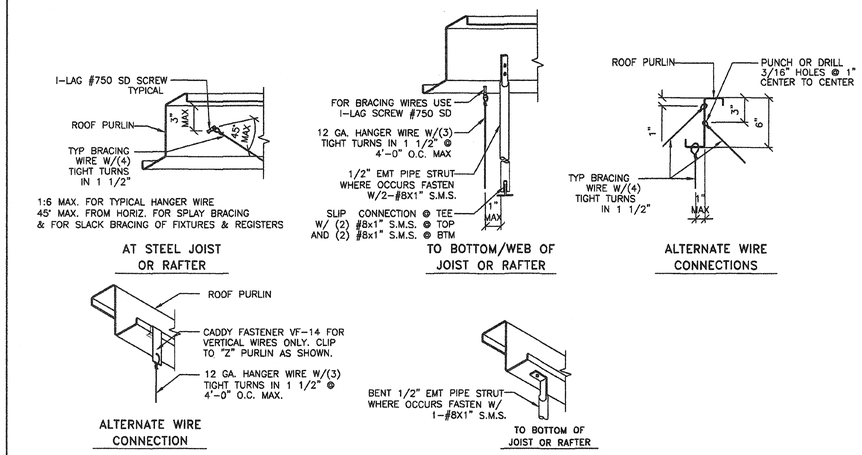

3 M2 CONNECTION TO PURLINS DETAILS
1 1/2"=1'-0"

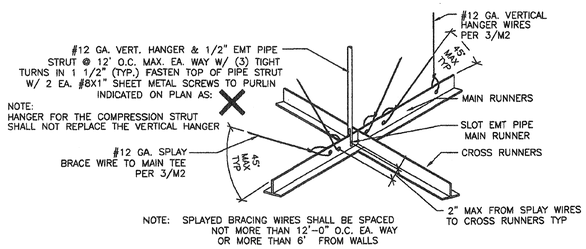

4 M2 SPLAY WIRE DETAIL
1 1/2"=1'-0"

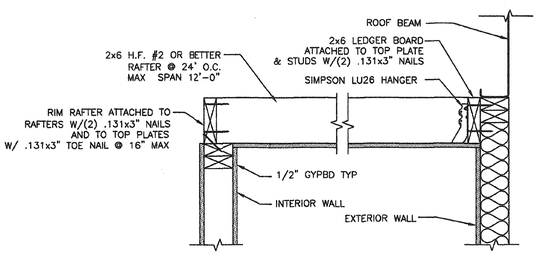

5 M2 GYPBOARD CEILING DETAIL
1 1/2"=1'-0"
OPTIONAL

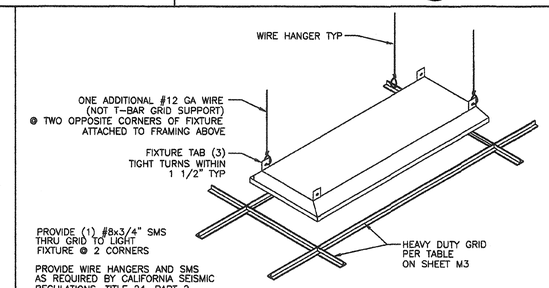

6 M2 LIGHT FIXTURE ATTACHMENT DETAIL
3/4"=1'-0"

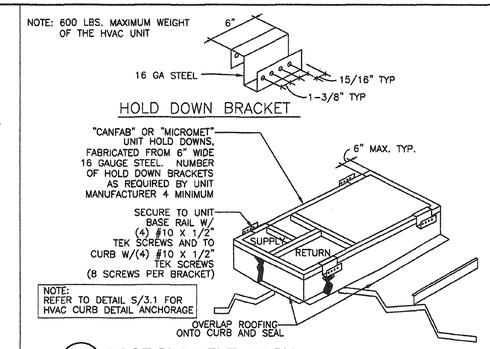

7 M2 ROOF CURB ELEVATION
N.T.S.
OPTIONAL

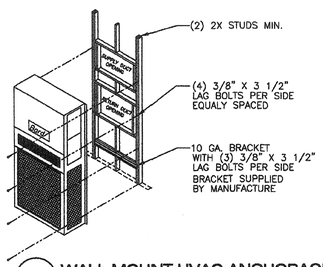

8 M2 WALL MOUNT HVAC ANCHORAGE
N.T.S.

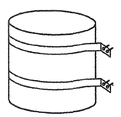

SUPPORT WATER HEATER WITH (2)- 22 ga. S.M. STRAP X 1 1/2" WIDE WITH 2-#12 x 3" HEX HEAD WOOD SCREWS AT EACH END TO A STUD OR SOLID BLOCKING.

NOTE:
PRESSURE RELIEF VALVE SHALL BE PLUMB TO OUTSIDE/EXTERIOR OF BUILDING

9 M2 WATER HEATER SUPPORT DETAIL
NTS

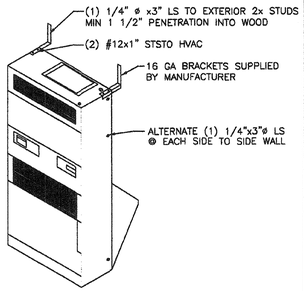

10 M2 INTERIOR HVAC ANCHORAGE
N.T.S.

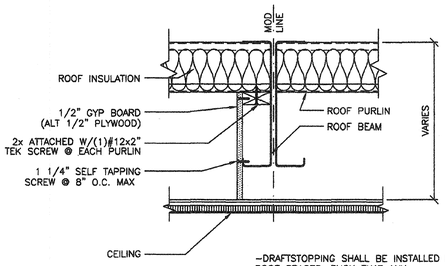

-DRAFTSTOPPING SHALL BE INSTALLED IN ATTICS AND CONCEALED ROOF SPACES, SUCH THAT ANY HORIZONTAL AREA DOES NOT EXCEED 3,000 SQUARE FEET (279 M) PER 717.4.3
EXCEPTIONS

1. IN OTHER THAN HIGH-RISE BUILDINGS, GROUP A,E,H,I AND L OCCUPANCIES AND OTHER APPLICATIONS LISTED IN SECTION 111 REGULATED BY THE OFFICE OF THE STATE FIRE MARSHAL, DRAFTSTOPPING IS NOT REQUIRED IN BUILDINGS EQUIPPED THROUGHOUT WITH AN AUTOMATIC SPRINKLER SYSTEM IN ACCORDANCE WITH SECTION 903.3.1.1

11 M2 DRAFT STOP DETAIL
1 1/2"=1'-0"

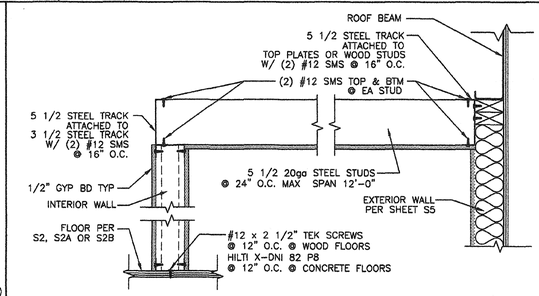

12 M2 GYPBOARD CEILING DETAIL W/ STEEL STUDS
1 1/2"=1'-0"
OPTIONAL

THESE DRAWINGS AND SPECIFICATIONS ARE THE PROPERTY OF AMERICAN MODULAR SYSTEMS, INC. AND ARE NOT TO BE REPRODUCED, CHANGED OR COPIED IN ANY FORM OR MANNER, NOR ARE THEY TO BE ASSIGNED TO ANY THIRD PARTY WITHOUT THE WRITTEN AUTHORIZATION OF AMERICAN MODULAR SYSTEMS, INC.

REVISIONS

NO	DATE	DESCRIPTION
1	8/12/09	REVISION 1
2		
3		
4		

DATE:8/12/09
SCALE:NOTED
DRAWN BY:RL
SERIAL NO.:

CUSTOMER:

2:12 PITCHED ROOF 24' x 40' THRU 120' x 40' RELOCATABLE BUILDINGS
MECHANICAL BUILDING SECTION & CEILING DETAILS

AMS
American Modular Systems Inc.
787 Spreckels Ave. Manteca, CA 95336
(209)825-1921 Fax (209)825-7016
americanmodular.com

APPROVALS:

REGISTERED PROFESSIONAL ENGINEER
No. C12631
Exp. 12-31-11
STATE OF CALIFORNIA

IDENTIFICATION STAMP
DIV. OF THE STATE ARCHITECT
03 13549
AC
DATE 9-2-2010

REVISION #1
IDENTIFICATION STAMP
DIV. OF THE STATE ARCHITECT
SACRAMENTO REGIONAL OFFICE
AC F/LS ~~FL~~ SS
APP. # PC 02-109695
DATE 7/20/2010

PROJECT No.
PC

M2-C