| MARK | BILL OF MATERIALS | | | |
|---|---|---|---|---|
| | QTY | SIZE OR MODEL NO | DESCRIPTION | REMARKS |
| | | | | |

ELECTRICAL PANEL
100A. 120/240V. 1ϕ 3-WIRE

| | | A | B |
|---|---|---|---|
| EVAP. COOLER | 30A. | ● | |
| EVAP. COOLER | 30A. | | ● |
| RECEPS | 25A. | ● | |
| RECEPS | 25A. | | ● |
| LIGHTS | 20A. | ● | |
| LIGHTS | 20A. | | ● |

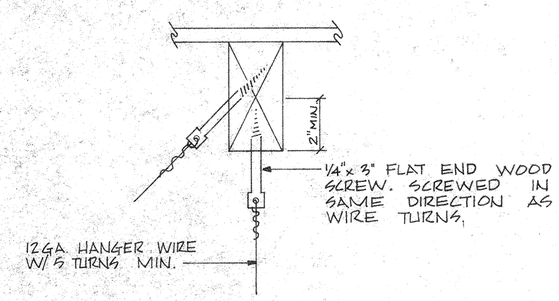


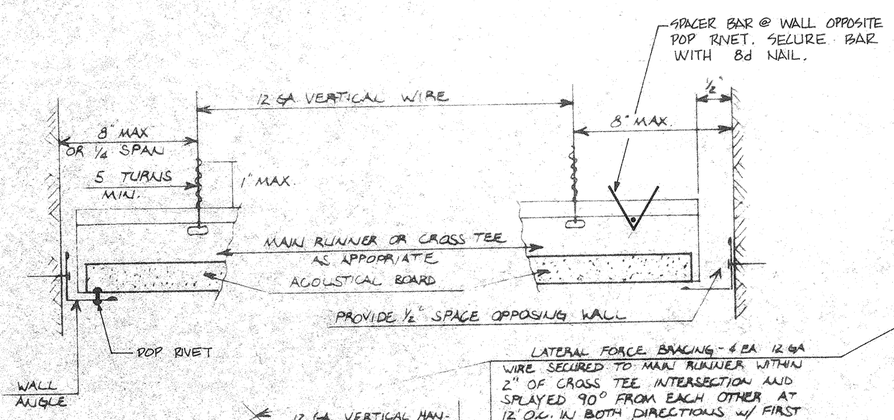


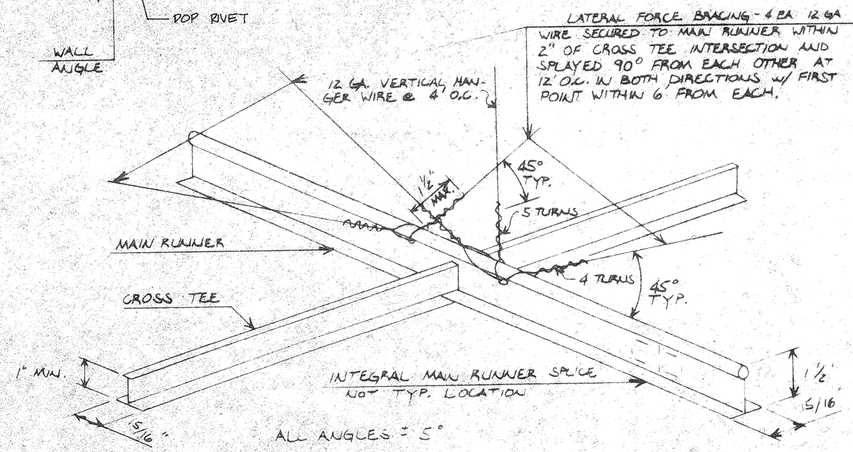


TYP. CEILING DETAIL N.T.S.

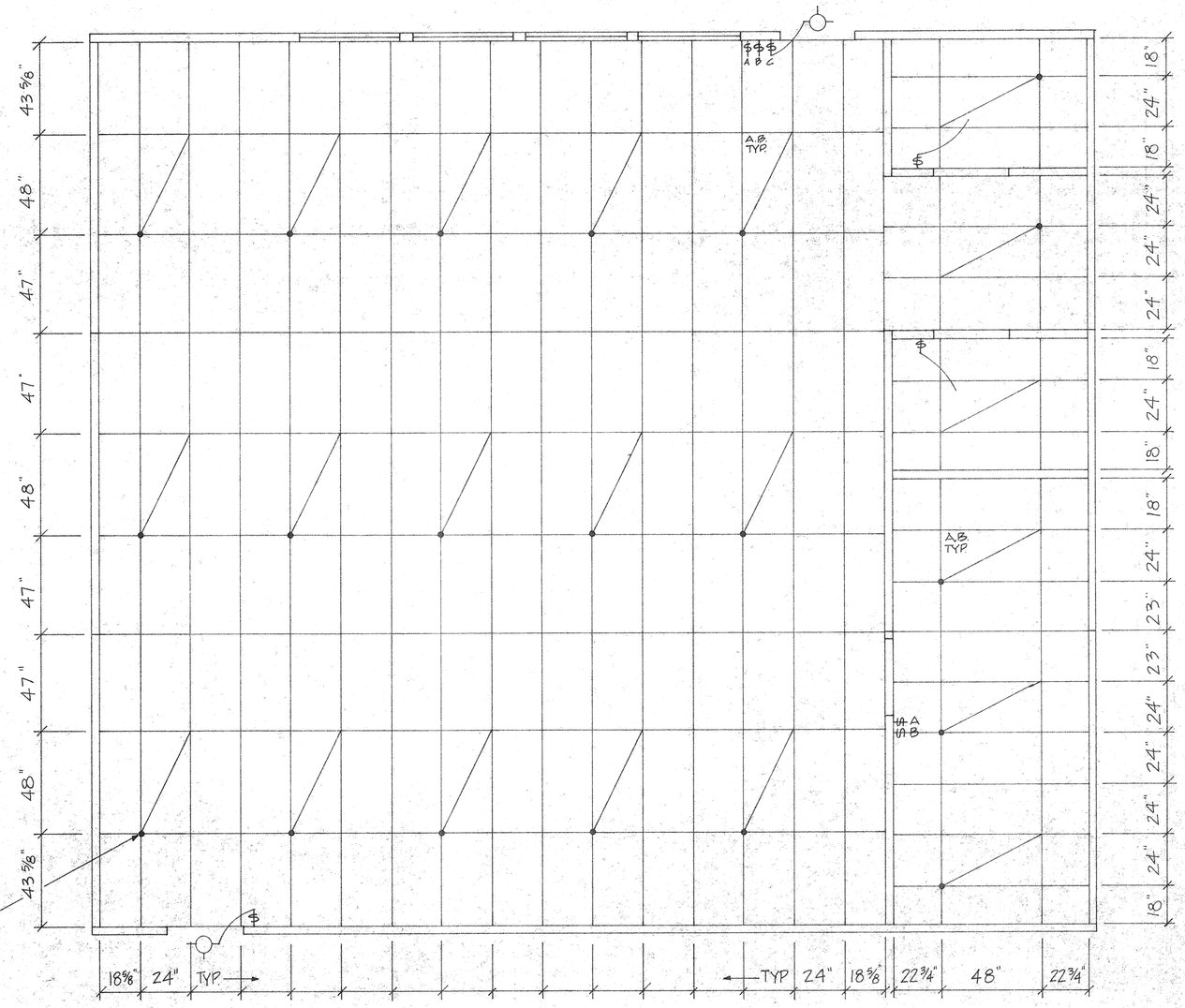


CEIL. GRID MAIN RUNNERS = DONN DX 24.
X. RUNNERS = " DX 0.416 SWITCHING: A - INSIDE TUBES OF EA. FIXTURE
B - OUTSIDE TUBES OF EACH FIXTURE

NOTE: EACH LIGHT FIXTURE TO BE SUPPORTED INDEPENDENTLY AT 4 CORNERS W/ TAUT #12 WIRE W/ MIN. 5 TURNS EA. END. & ATTACHED TO ROOF SIM. TO ROOF ATTACHEMENT ABOVE.

'KINDERGARTEN'

Leonard J. Schroeder A.I.A. C-3680.

OFFICE OF THE STATE ARCHITECT
STRUCTURAL SAFETY SECTION
AUG 30 1983
AUG 0 1983
AUG 30 1983

| Date | By | No. | Date | By | No. |
|---|---|---|---|---|---|
| | | | | | |

REVISIONS

Project BAKERSFIELD CITY SCHOOL DISTRICT

Title REFELECTED CEIL. PLAN

Dwg. no.

Series

SCALE 1/4" = 1'-0" DATE 6-25-83 DWN. BY RKO CKD. BY

Job no.

TELLUS CORPORATION
7340 FRENCH ROAD SACRAMENTO CA.
COLTON PLANT
COLTON, CA. SACRAMENTO, CA SALEM, ORG. BOISE, IDAHO

Sht. 4 of