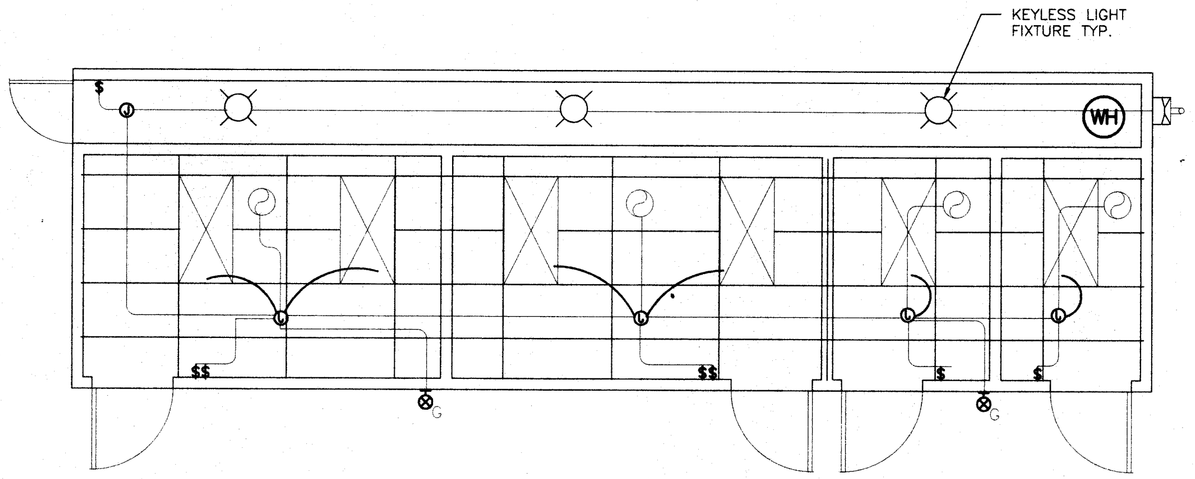

3 / E1 **LIGHT FIXTURE PLAN ALT. 3**
1/4" = 1'-0"

STANDARD ELECTRICAL SYMBOLS

- FLUORESCENT LIGHTING FIXTURE – SURFACE MOUNTED.
- FLUORESCENT LIGHTING FIXTURE – RESCESSED.
- FLUORESCENT LIGHTING FIXTURE – WALL MOUNTED (EXTERIOR)
- INCANDESCENT LIGHTING FIXTURE – WALL MOUNTED (INTERIOR).
- DUPLEX WALL CONVENIENCE OUTLETS +18".
- SINGLE POLE LIGHT SWITHCES +48", HUBBELL PREMIUM, BRYANT HEAVY DUTY, OR LEVITON SPECIFICATIONS GRADE.
- ELECTRICAL CROSSOVER J–BOXES ABOVE T–BAR CEILING #1–4"X1",#22 4"X2"
- WALL CLOCK OUTLET WITH POWER OUTLET +84".
- a — SWITCH SUBSCRIPTS – a=DEVICE CONTROLLED.
- 15 AMP DUPLEX RECEPTACLE +18". HOSPITAL GRADE.
- JUNCTION BOX – SIZE AND TYPE AS REQUIRED.
- PANELBOARD – SEE SCHEDULE.
- TERMINAL CABINET – SIZE AND TYPE AS NOTED.
- CONDUIT CONCEALED IN CEILING OR WALL.
- CONDUIT CONCEALED BELOW FLOOR OR GRADE.
- HOMERUN TO RESPECTIVE PANEL TO TERMINAL.
- INDICATES 1#14 (GREEN) GROUND WIRE, OTHER SIZES AS INDICATED.
- NOTE — BRANCH CIRCUIT WITHOUT FURTHER DESIGNATION IS A 2#14 WIRE CIRCUIT, FOR MORE THAN 2#14 WIRES AS FOLLOWS, —III— 3#14, —IIII— 4#14 ETC. FOR OTHER SIZES AS FOLLOWS, —III$_{10}$ 3#10, —IIII$_{6}$ 4#6 ETC.
- A — FIXTURE IDENTIFICATION – LETTER INDICATES TYPE.
- N.I.E.S. — ABBREV. FOR NOT IN ELECTRICAL SECTION OF THESE PLANS AND SPEC'S.
- MT — ABBREV. FOR EMPTY CONDUIT WITH POLY PULL CORD.
- FUSED DISCONNECT SWITCH SIZE AS REQUIRED. PROVIDE FUSES AS RECOMMENDED BY EQUIPMENT SUPPLIER.
- [W.E.F.] — WALL MOUNTED EXHAUST FAN N.I.E.S. CONNECT AS REQUIRED.
- 50 AMP 250 VOLT RANGE RECEPTACLE.
- F — FIRE ALARM STATION – OUTLET ONLY, 4" SQ. BOX W/ SINGLE DEVICE RING AND COVER +48"CENTERLINE
- FIRE ALARM HORN – OULET ONLY – 4" SQ. BOX W/ SINGLE DEVICE RING AND COVER +90" TO TOP. (EXTERIOR ONLY)
- FIRE ALARM VISUAL ALARM– OUTLET ONLY – 4" SQ. BOX W/ SINGLE DEVICE RING AND COVER BOTTOM +80". A.F.F. BUT NO GREATER THAN +96". IF CEILING MOUNTED PER NFPA72 TABLE 6–4.4.1(b).
- SPEAKER– OUTLET ONLY – 4" SQ. BOX W/ SINGLE DEVICE RING AND COVER +84"
- INTERCOM TELEPHONE– OUTLET ONLY– 4" SQ. BOX W/ SINGLE DEVICE RING AND COVER +48"
- M — FIRE ALARM MINI HORN – OULET ONLY – 4" SQ. BOX W/ SINGLE DEVICE RING AND COVER +90" TO TOP AND NOT LESS THAN 6" BELOW FINISHED CEILING.

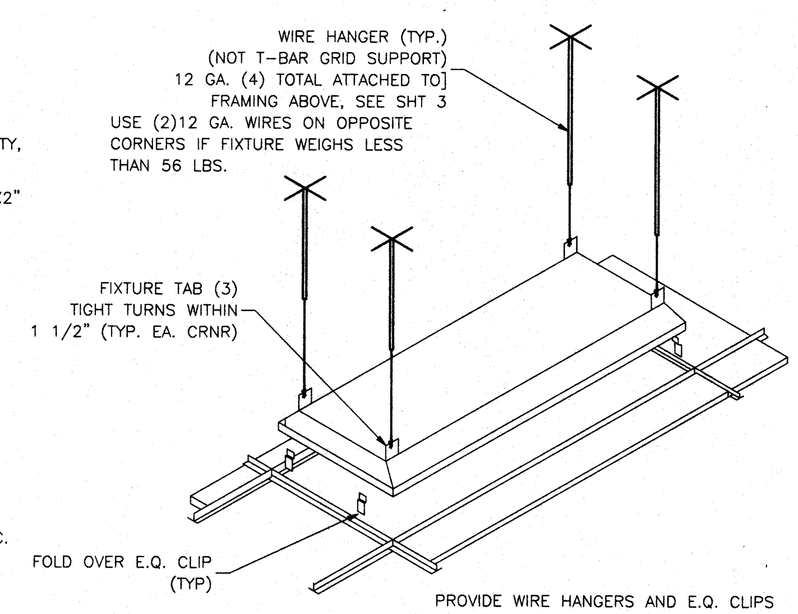

SUPPORT DETAIL

PROVIDE WIRE HANGERS AND E.Q. CLIPS AS REQUIRED BY CALIFORNIA SEISMIC REGULATIONS CBC 2501.A.5 & IR. 47–4

FIRE ALARM SYSTEM

1. THE FIRE ALARM SYSTEM SHALL CONFORM TO THE CALIFORNIA ELECTRICAL CODE, ARTICLE 760 &CA. FIRE CODE ART. 10.
2. INSTALLATION OF THE FIRE ALARM SYSTEM SHALL NOT BE STARTED UNTIL DETAILED PLANS AND SPECIFICATIONS, INCLUDING CALIFORNIA STATE FIRE MARSHAL LISTING NUMBERS FOR EACH COMPONENT OF THE SYSTEM HAVE BEEN APPROVED BY THE DIVISION OF THE STATE ARCHITRCT.
3. UPON COMPLETION OF THE INSTALLATION OF THE FIRE ALARM SYSTEM, A SATISFACTORY TEST OF THE ENTIRE SYSTEM SHALL BE MADE IN THE PRESENCE OF THE ENFORCING AGENCY.

GENERAL NOTES

1. GROUNDING ELECTRODE CONDUCTOR SIZED PER CEC 250–94 & 95.
2. ALLOW FOR 12' MOVEMENT IN ANY DIRECTION IF PAD FOUNDATION IS USED.
3. PROVIDE BONDS TO BLDG. STEEL & PANEL (#8 CU)
4. PANEL TO LISTED FOR USE AS SERVICE EQUIPMENT.

FIXTURE NOTES:

1. ALL FLUORESCENT LIGHT FIXTURES SHALL HAVE ENERGY SAVING LAMPS AND BALLASTS.
2. LUMINATES/BALLASTS SHALL BE CERTIFIED PER CALIFORNIA BUILDING CODE TITLE 24.
3. FLUORESCENT LIGHT FIXTURE TYPE "A" SHALL BE CONTROLLED TO PROVIDE TWO LEVELS OF LIGHTING. SWITCH (SA) SHALL CONTROL THE TWO OUTER LAMPS AND SWITCH (SB) SHALL CONTROL THE TWO INNER LAMPS.

SYMBOL	DESCRIPTION	WATTS	MANUFACTURER
	2'X4' FLOURESCENT DROP IN FIXTURE, ACRYLIC PRISMATIC LENS. ENERGY SAVING BALLAST. (4)35 WATT TUBES, WT. 27 LBS.	156 W	LIGHTOLIER XT2GVA440ZIL
	FLOURESCENT SURFACE MOUNTED EXTERIOR LIGHT WITH IMPACT RESISTANT ENCLOSURE. .125 THICK CLEAR PRISMATIC ONE PIECE LENS W/ NEOPRENE GASKET & "POSIGRIP" STAINLESS STEEL SCREWS.	(2) 7W TT 2700 K	KENALL 3714 OR LITHONIA 202 2/7PL LP

SEE TYPICAL CLASSROOM LAYOUT FOR LOCATIONS OF ALL DEVICES.
FIXTURE MOUNTING SHALL COMPLY WITH CALIFORNIA SEISMIC REGULATIONS.

ELECTRICAL

1. Electrical service drop and connections supplied by others.
2. Manufacturer to provide stub–out from back of electrical panel through the exterior wall for receiving either underground or overhead service & fitting for grounding cable.
3. Electrical panel board shall be recess mounted inside the building. Sized to accommodate all connected loads including spaces as shown. Overcurrent protective devices in the panel boards have adequate short circuit interrupting capacity. All buses including bus shall be copper or aluminum.
4. 2x4 Flourescent fixtures shall be steel frame, lens shall be hinged and locked in place by two locking devices. The lens diffusers shall be KHS, Inc. #KSH–12, Carolite, Inc. #C–12 or Plaskolite, Inc. #PL21A. Minimum lens thickness shall be .125 inch.
5. Flourescent ballast shall be energy saver while maintaining full light output, class "P" equipped with thermal protectors, guaranteed against failure for (2) years and be replaced from inside the fixture.
6. Clock – 12" dial clock on clock outlet.
   A) Clock shall be General Electric model 2912 129V 60 cycle
   B) Clock outlet shall be Bryant #2828 or equal with seperable hanging clip & app'd recept.

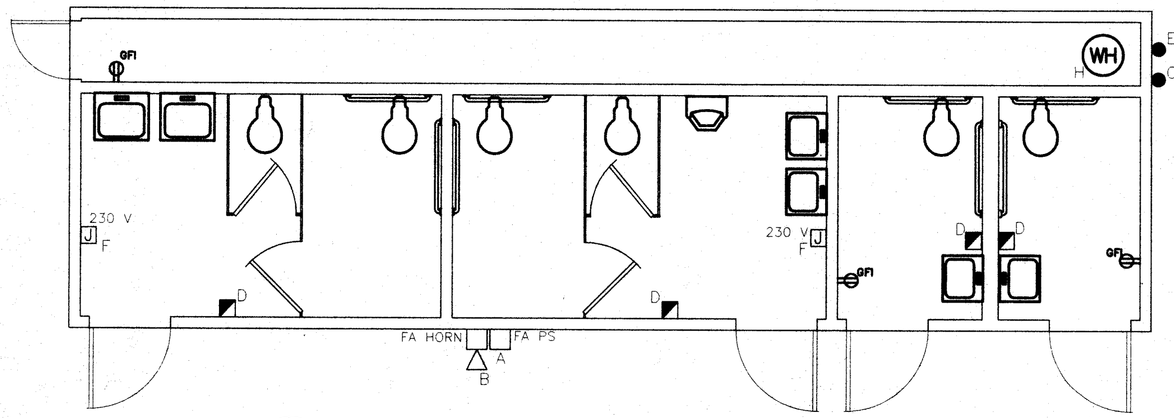

3 / E2 **ELECTRICAL PLAN ALT. 3**
1/4" = 1'-0"

FIRE ALARM
Junction boxes – Galvanized sheet metal, square or rectangular with blank covers. Locate one box at rear of building near main electrical panel at +18– above finish floor for future connection.
Covers – Install gasketed, metal, waterproof, finish covers at exterior locations. Install finish covers at interior locations.

If testing results determine fire alarm audibility does not meet 15db over ambient noise levels, additional fire alarm signaling devices may be required by the enforcing anency

THESE DRAWINGS AND / OR SPECIFICATIONS AND / OR CALCULATIONS FOR THE ITEMS LISTED BELOW HAVE BEEN PREPARED BY OTHER DESIGN PROFESSIONALS WHO ARE LICENSED AND AUTHORIZED TO PREPARE SUCH DRAWINGS IN THIS STATE. THESE DOCUMENTS HAVE BEEN EXAMINED AND HAVE BEEN FOUND TO MEET THE APPROPRIATE REQUIREMENTS OF TITLE 24, CALIFORNIA CODE OF REGULATIONS AND THE PROJECT SPECIFICATIONS

THE ITEMS LISTED BELOW ARE ACCEPTABLE FOR INCORPORATION INTO THE CONSTRUCTION OF THIS PROJECT FOR WHICH I AM THE INDIVIDUAL DESIGNATED TO BE GENERALLY RESPONSIBLE (OR FOR WHICH I HAVE BEEN DELEGATED RESPONSIBILITY) FOR THIS PORTION OF THE WORK.

A LIST OF ITEMS HAS BEEN REVIEWED AND ACCEPTED. (FOR DRAWINGS, A LIST OF ALL ACCEPTED DRAWINGS ARE ATTACHED. SEE SHEET [illegible])

LICENSED ARCHITECT — STATE OF CALIFORNIA

STEPHEN J. O'BRIEN, [illegible] DATE

BUILDING ELECTRICAL & FIRE ALARM STANDARDS:

1. All electrical wiring shall be in E.M.T. No romex wire shall be allowed.
2. All junction boxes for the fire alarm system components shall be 4/s and single gang ring.
3. All conduits from 1" stub to junction boxes for fire alarm components shall be 3/4" E.M.T.
4. Student restrooms shall have keyed switches.
5. Adult restrooms shall have standard switches.
6. Provide at least 3 lights for plumbing chase. No pull string activated fixtures allowed. Lights shall be wired to standard switch.

A– Fire Alarm pull station – Install at +48" from floor.
B– Exterior Fire Alarm Horn – Install at +90" from floor.
C– J–Box only (Fire Alarm tie–in) Install 4/S box, 2 gang ring with 1" conduit above ceiling. Tie to 3/4" conduits as shown on plan.
D– 4/S J–Box for fire Alarm strobe light.
E– Electrical service tie–in location.
F– J–Box mounted at +36" with 230 power for District supplied hand dryers.
G– Exterior energy saving light fixture. Standard switch located in plumbing chase. Identify switch as such.
H– 6 gallon 120 volt electric water heater. Mount on wall as high as possible with DSA approved platform and safety straps.

SCHOOL EQUIPMENT ANCHORAGE

THE SEISMIC ANCHORAGE OF ELECTRICAL EQUIPMENT SHALL CONFORM TO C.B.C. TITLE 24.

FOR ELECTRICAL DRAWINGS:
ALL ELECTRICAL EQUIPMENT SHALL BE BRACED OR ANCHORED TO RESIST A HORIZONTAL FORCE ACTING IN ANY DIRECTION USING THE FOLLOWING CRITERIA.

EQUIPMENT ON GRADE — 20% OF OPERATING WEIGHT.
EQUIPMENT ON STRUCTURE — 30% OF OPERATING WEIGHT.

FOR FLEXIBLY MOUNTED EQUIPMENT USE 4X THE ABOVE VALUES AND FOR SIMULTANEOUS VERTICAL FORCE USE 1/3 X THE HORIZONTAL FORCE

ABOVE VALUES ARE FOR AN IMPORTANCE FACTOR I= 10 AND SEISMIC ZONE, Z = 0.4

WHERE ANCHORAGE DETAILS ARE NOT SHOWN ON THE DRAWINGS THE FIELD INSTALLATION SHALL BE SUBJECT TO THE APPROVAL OF THE ARCHITECT AND THE FIELD ENGINEER OF THE DIVISION OF THE STATE ARCITECT.

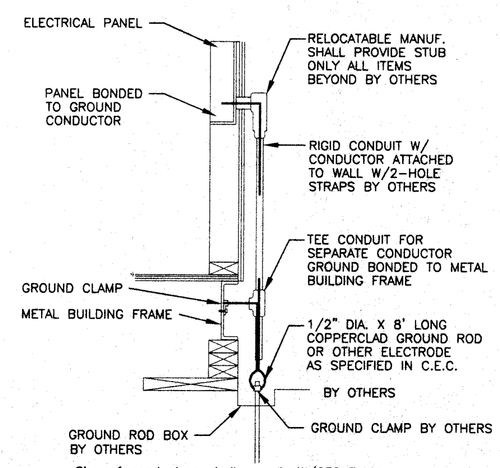

Size of conductors shall comply W/CEC Table

Bond separate conductors from ground rod to electrical panel & metal building from.
In addition to the detail shown above, bond the electrical ground to metal water pipe embedded @ least 10' into the soil if available.
Electrical bond modules together W/#8 CU @ modline. By manufacturer. Check resistance to ground. If resistance exceeds 25 OHMS, install additional ground rods as required. Grounding detail per I–R 8–1.

A / E1 **BUILDING GROUND DETAIL**
N.T.S.

VOLTS: 120/240 SINGLE PHASE				PANEL: A						FEED: EXTERIOR LB		
MAIN: 100 AMP MAIN BKR.				LOCATION: INTERIOR						MOUNTING: FLUSH		
LOAD	WATTS A	WATTS B	BRK. AMP	BRK. P	CIR	A	B	CIR	BRK. P	BRK. AMP	WATTS A	WATTS B	LOAD
LIGHTS, FANS	550		15	1	1			2	1	15	550		LIGHTS, FANS
DUPLEX RECEPT.		600	15	1	3			4	1	15		200	LIGHTS, FLUORESCENT
SPACE					5			6					SPACE
					7			8					
					9			10					
					11			12					
					13			14					
					15			16					
PHASE WATTAGE	550	600			17			18			550	200	PHASE WATTAGE
TOTAL WATTS "A"LEG: 1100		TOTAL WATTS A+B=1900						TOTAL WATTS "B" LEG 800					
TOTAL WATTS: 1900		10	AMPS	120/240V		SINGLE PHASE						100AMP BUS.	

FEEDERS: TO BE RUN BY THE DISTRICT EITHER UNDERGROUND OR OVERHEAD, SEE SITE ELEC. PLAN.

3 / E1 **ELECTRICAL DISTRIBUTION PLAN**
1/4" = 1'-0"

NOTE
STUB OUT LOCATIONS FOR ELECTRICAL PANEL, FIRE ALARM, AND DATA BOXES. LOCATIONS SHOWN ARE DIAGRAMITICAL ONLY. EXACT LOCATIONS MAY VARY +/– SEVERAL FEET. PLEASE CONTACT AMERICAN MODULAR SYSTEMS FOR EXACT LOCATIONS. POINT OF CONNECTION WILL BE AT FACE OF BUILDING.

FILE NO.
IDENTIFICATION STAMP
DIV. OF THE STATE ARCHITECT
OFFICE OF REGULATION SERVICES
03-106605
AC. FLS. SS.
DATE JUN 04 2003

BASED ON PC# 02-10174

12 X 40
RELOCATABLE
BUILDING

American Modular Systems
333 EAST CARNEGIE CT. MANTECA, CALIFORNIA 95337
PHONE (209) 825–1921 FAX. (209) 825–7018

LICENSED ARCHITECT — 3-31-03 — STATE OF CALIFORNIA

CUSTOMER: BAKERSFIELD CITY SCHOOL DISTRICT

ELECTRICAL PLAN & NOTES

DATE: 09–30–02
SCALE: NONE
DRAWN BY: Y.A.
CHECKED BY:
CHECKED BY:
SERIAL NO.

REVISIONS

NO	DATE	DESCRIPTION	NO	DATE	DESCRIPTION

PROJECT No.

SHEET No. E 1