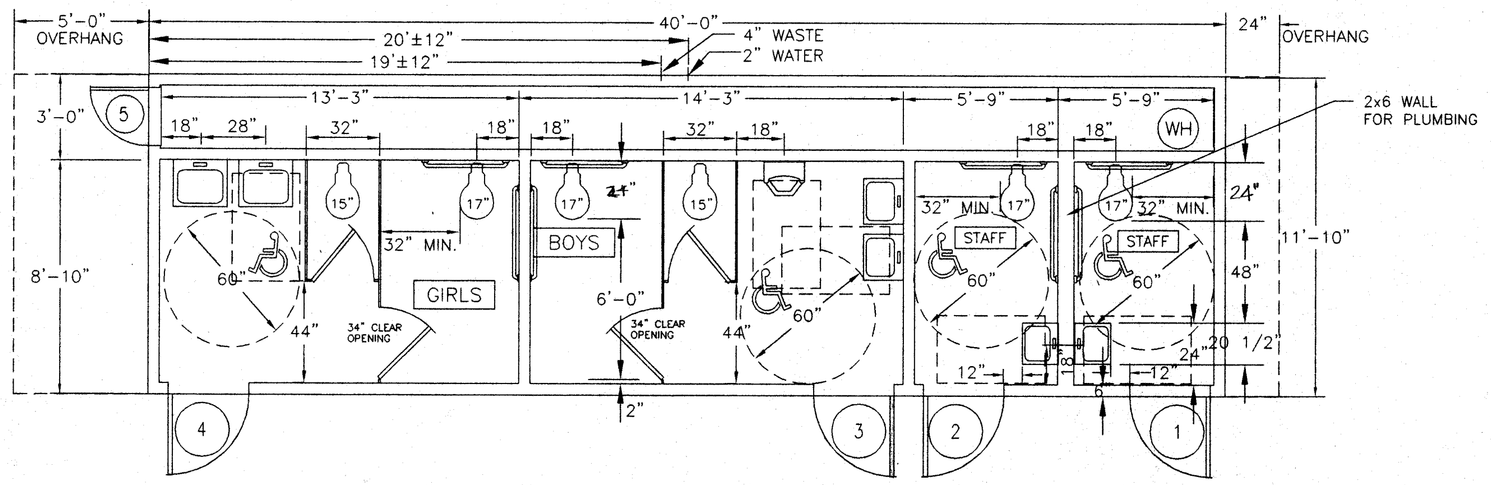

FLOOR PLAN ALTERNATE 3

SCALE: 1/4"=1'-0"

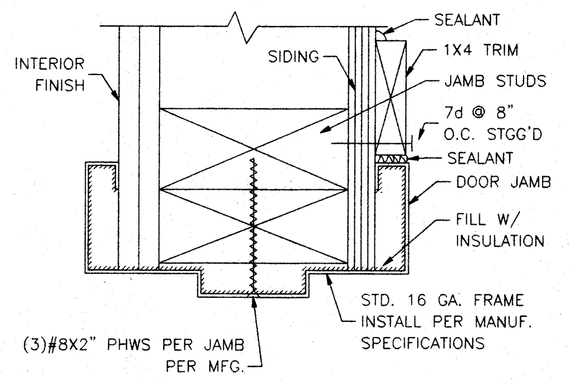

TYPICAL EXTERIOR DOOR JAMB (5/1)

NO SCALE

NOTE: SEE MANUFACTURES SPECS FOR INSTALLATION.

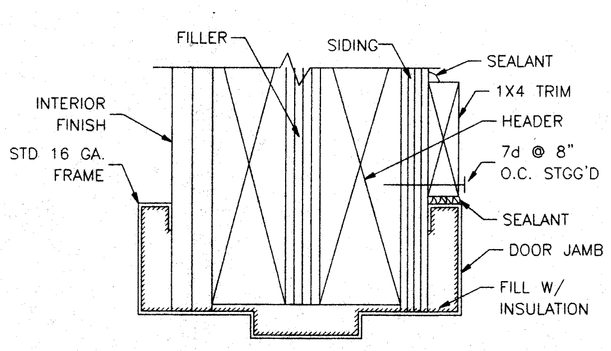

TYPICAL EXTERIOR DOOR HEAD (6/1)

NO SCALE

NOTE: SEE MANUFACTURES SPECS FOR INSTALLATION.

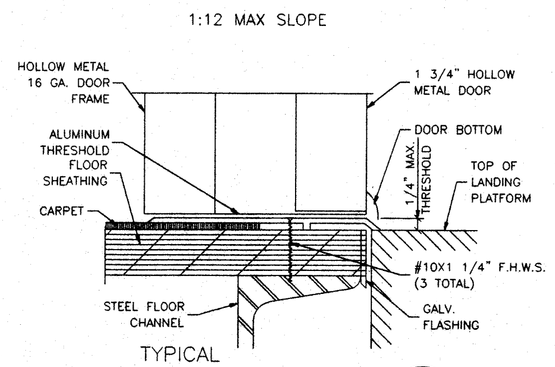

TYPICAL EXTERIOR DOOR SILL (4/1)

NO SCALE

NOTES

INTERIOR

1. Floor: Carpets – Units shall be carpeted as indicated on floor plan with direct glue down type per State of California Specification 7220–XXX–01. Group 1, Type A, Class 26. Color will be selected by District after award of bid. The carpet density shall be 4600 minimum. Pile yarn shall be branded nylon. No cross seams shall be allowed.

1a. Restroom Floor: Armstrong sheet vinyl or equal.

3. Interior walls shall be vinyl covered tackboard U.N.O. applied in one continuous length from floor to ceiling. The tackboard shall be industrial insulation board manufactured specifically as a substitute for vinyl covered wall panels. The board shall be asphalt free, shall have an ironed–on coating and shall have a minimum density of 18 lbs. per ft. The vinyl coating shall be made of virgin vinyl calendered base color, weighing a minimum of 8 oz. per square yard. The coating backing shall be sheeting or non–woven fabric. The vinyl coating shall be mechanically laminated, with the long edges wrapped, to the tackboard. Tackboard shall be applied over 1/2" sheetrock or 3/8" plywood sheathing. The vinyl wall covered panel shall have a Class III flame spread rating. The panel shall be approved for classroom use by The California State Fire Marshal. Reference brand: Vinyl covered tackboard as manufactured by Chatfield–Clarke or comparable. Care shall be taken in mounting the tackboard so that the texture of all panels will have the same orientation and color match.

3a. Interior restroom walls shall be F.R.P. U.N.O.

4. Ceiling: Suspend T–Bar System, see sheet 3 for details etc. Materials and installation per CCR 2501.A.5 and IR #47–4 inclusive as applicable to classrooms.

DOORS

Exterior Doors: Metal Doors – 3'0"X6'8" hollow metal door construction of 1 sheet of 18 ga. steel assembled per CS242 min and reinforced.
(Reinforce both faces for closure)
provide flush top on doors. Hardware reinforcement shall be 10 ga. min for hinges, door frame shall be 16 ga. pressed steel frame ASTM A366 & C5242. Hardware reinforcement shall be 10 ga. plate. Frames shall be designed with integral stop and trim. Provide (3) anchors per jamb.

HARDWARE

1. Exterior Door
   A) Hinges: HAGER 4–1/2X4–1/2 butts, BB1279 US26D,1–1/2 pair each door with set screw in barrel and ball bearing design, or approved equal.
   B) Lockset: Classroom lever handle lockset, mortise or cylindrical type, Schlage D70PD (Rodes) or equal. US26D finish.

   C) Closer: Norton 7500 series door closer capable of 190 degree opening.
   D) Weatherstripping: All exterior doors shall be weatherstripped with Pemko 299D, Ultra WS007, at door jambs and head or equal.
   E) Threshold: Threshold shall be Pemko 271 AV 5" aluminum with Pemko 216 AV Ultra TH042 door bottom.
   F) Doorstop: Quality #44, or equal.

THESE DRAWINGS AND / OR SPECIFICATIONS AND / OR CALCULATIONS FOR THE ITEMS LISTED BELOW HAVE BEEN PREPARED BY OTHER DESIGN PROFESSIONALS WHO ARE LICENSED AND AUTHORIZED TO PREPARE SUCH DRAWINGS IN THIS STATE. THESE DOCUMENTS HAVE BEEN EXAMINED AND HAVE BEEN FOUND TO MEET THE APPROPRIATE REQUIREMENTS OF TITLE 24, CALIFORNIA CODE OF REGULATIONS AND THE PROJECT SPECIFICATIONS

THE ITEMS LISTED BELOW ARE ACCEPTABLE FOR INCORPORATION INTO THE CONSTRUCTION OF THIS PROJECT FOR WHICH I AM THE INDIVIDUAL DESIGNATED TO BE GENERALLY RESPONSIBLE (OR FOR WHICH I HAVE BEEN DELEGATED RESPONSIBILITY) FOR THIS PORTION OF THE WORK.
A LIST OF ITEMS HAS BEEN REVIEWED AND ACCEPTED. (FOR DRAWINGS, A LIST OF ALL ACCEPTED DRAWINGS ARE ATTACHED, SEE SHEET NO.).

REGISTERED ARCHITECT C-18098 STATE OF CALIFORNIA

THOMAS J. CONNELLY, AIA — DATE

FILE NO.

IDENTIFICATION STAMP
DIV. OF THE STATE ARCHITECT
OFFICE OF REGULATION SERVICES

03 - 106605

AC. FLS. SS.

DATE JUN 04 2003

~~BASED ON PCF 02-101744~~

12 X 40
RELOCATABLE
BUILDING

American Modular Systems

787 Spreckels Ave. Manteca, CA 95336
(209) 825-1921 Fax (209) 825-7018
americanmodular.com

REGISTERED ARCHITECT
RANDALL PATRICK CANNON
C-18031
8-31-03
RENEWAL DATE
STATE OF CALIFORNIA

CUSTOMER:
BAKERSFIELD CITY SCHOOL DISTRICT

FLOOR PLAN & NOTES

DATE: 12-10-02
SCALE: NONE
DRAWN BY: Y.A.
CHECKED BY:
CHECKED BY:
SERIAL NO.

REVISIONS

NO	DATE	DESCRIPTION	NO	DATE	DESCRIPTION
△			△		
△			△		
△			△		
△			△		

PROJECT No.

SHEET No. 1