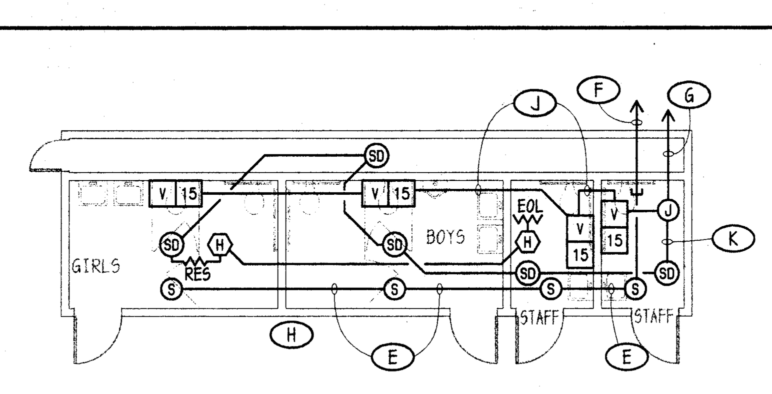

TOILET BUILDING PLAN

NOTES (THIS PLAN ONLY):

- (C) PROVIDE INTERIOR SPEAKER, MOUNT FLUSH IN CEILING - TYPICAL.
- (E) ONE "A" CABLE.
- (F) SPARE CONDUITS BETWEEN BLDGS PER SITE SIGNALS PLAN. PULL "A" CABLE IN ONE.
- (G) REFER TO SHEET #E-2 FOR CONTINUATION TO ADJACENT BLDG OR SITE CONNECTIONS.
- (H) RUN NEW SIGNALS FEEDERS CONCEALED IN ACCESSIBLE ATTIC SPACE/WALLS. IF NOT POSSIBLE, PROVIDE A SURFACE NON-METALLIC RACEWAY SYSTEM (WIREMOLD #800 SERIES OR EQUAL) & INSTALL SURFACE ON WALLS & CEILING AS REQUIRED.
- (J) 1/2"C - 4 #1 - TYPICAL TO V
- (K) 1/2"C - 4 #14 - TYPICAL TO S & H.

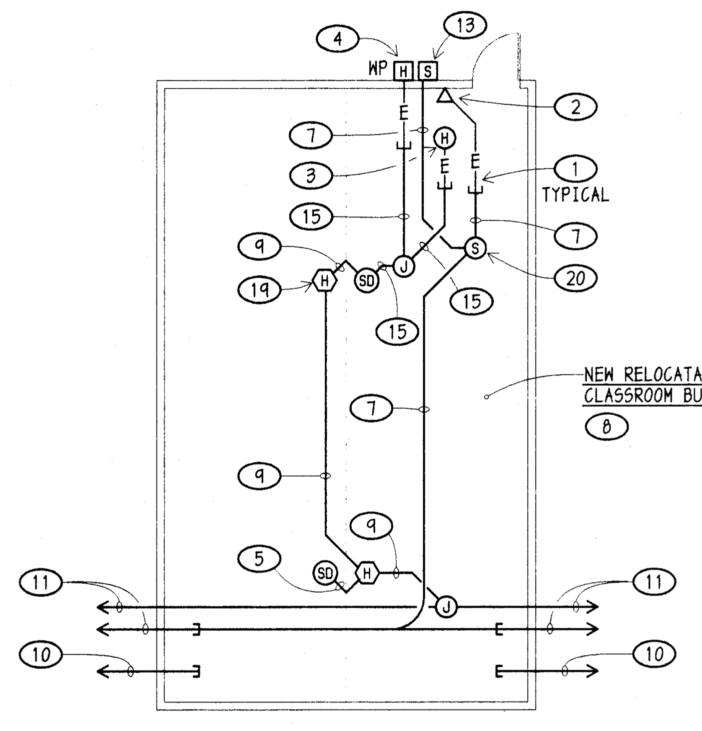

TYPICAL CLASSROOM BLDG PLAN

NOTES (THIS PLAN ONLY):

1. EXISTING 1/2"C STUB INSIDE ACCESSIBLE ATTIC SPACE SUPPLIED WITH RELOCATABLE BUILDING. COORDINATE EXACT LOCATION AT SITE. TYPICAL AT ROUGH-IN BOXES FOR FIRE ALARM/I.C. DEVICES. PULL-IN CABLES/CONDUCTORS AS SHOWN.
2. EXISTING JUNCTION BOX SUPPLIED WITH RELOCATABLE BUILDING. INSTALL NEW TEL/ INTERCOM HANDSET.
3. PROVIDE FIRE ALARM MINI HORN AT JUNCTION BOX (IN WALL) SUPPLIED WITH RELOCATABLE BUILDING.
4. PROVIDE FIRE ALARM EXTERIOR HORN AT JUNCTION BOX SUPPLIED WITH RELOCATABLE BUILDING, ONLY WHERE SHOWN ON SITE SIGNALS PLAN.
5. 1/2"C - 4 #14
6. NOT USED
7. ONE 'A' CABLE
8. RUN NEW SIGNALS FEEDERS CONCEALED IN ATTIC SPACE/WALLS. IF NOT POSSIBLE PROVIDE A SURFACE NON-METALLIC RACEWAY SYSTEM (WIREMOLD #800 SERIES OR EQUAL).
9. 3/4"C - 4 #12, 4 #14
10. SPARE CONDUIT STUBS BETWEEN BUILDINGS PER SHEET #E1.
11. REFER TO SHEET #E-1 FOR CONTINUATION OF SIGNALS CONNECTIONS BETWEEN BUILDINGS.
12. NOT USED
13. INSTALL EXTERIOR SPEAKER SURFACE ON WALL ON BLDGS AS NOTED ON SITE SIGNALS PLAN.
14. NOT USED
15. 1/2"C - 4 #12.
16. NOT USED
17. NOT USED
18. NOT USED
19. MOUNT HEAT DETECTOR IN ACCESSIBLE ATTIC. TYPICAL, U.O.N.
20. INSTALL NEW SPEAKER FLUSH IN CEILING. TYPICAL, U.O.N.

## 1 TYPICAL RELOCATABLE BLDG. AND TOILET BLDG. SIGNALS PLANS

SCALE: 1/8" = 1'-0"

ALL CONSTRUCTION W.P.

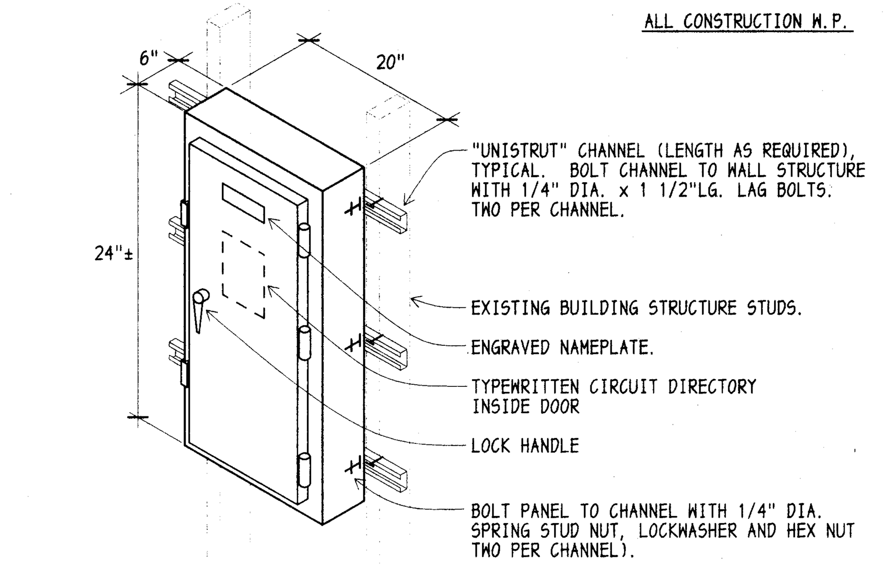


## 3 SURFACE MOUNTED PANEL (EXTERIOR)

NTS

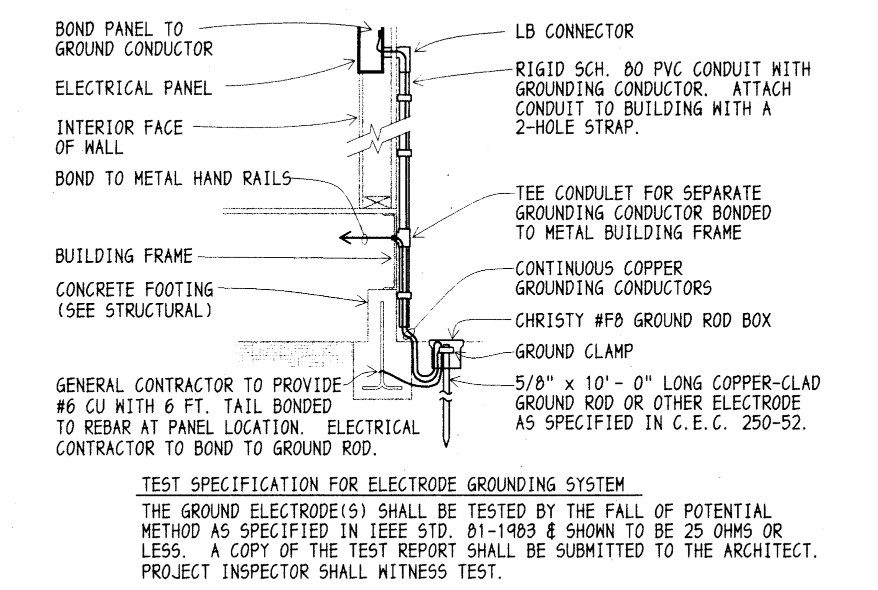


TEST SPECIFICATION FOR ELECTRODE GROUNDING SYSTEM

THE GROUND ELECTRODE(S) SHALL BE TESTED BY THE FALL OF POTENTIAL METHOD AS SPECIFIED IN IEEE STD. 81-1983 & SHOWN TO BE 25 OHMS OR LESS. A COPY OF THE TEST REPORT SHALL BE SUBMITTED TO THE ARCHITECT. PROJECT INSPECTOR SHALL WITNESS TEST.

## 4 SYSTEM GROUND DETAIL

BOND BUILDINGS TOGETHER WITH 1 #6 CU WHEN PORTABLES ARE LOCATED SIDE BY SIDE.

NTS

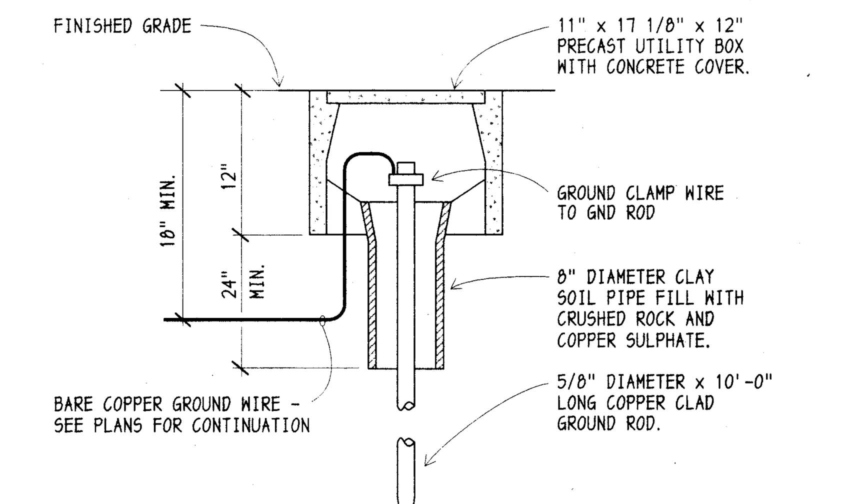


## 5 GROUND WELL DETAIL

NTS

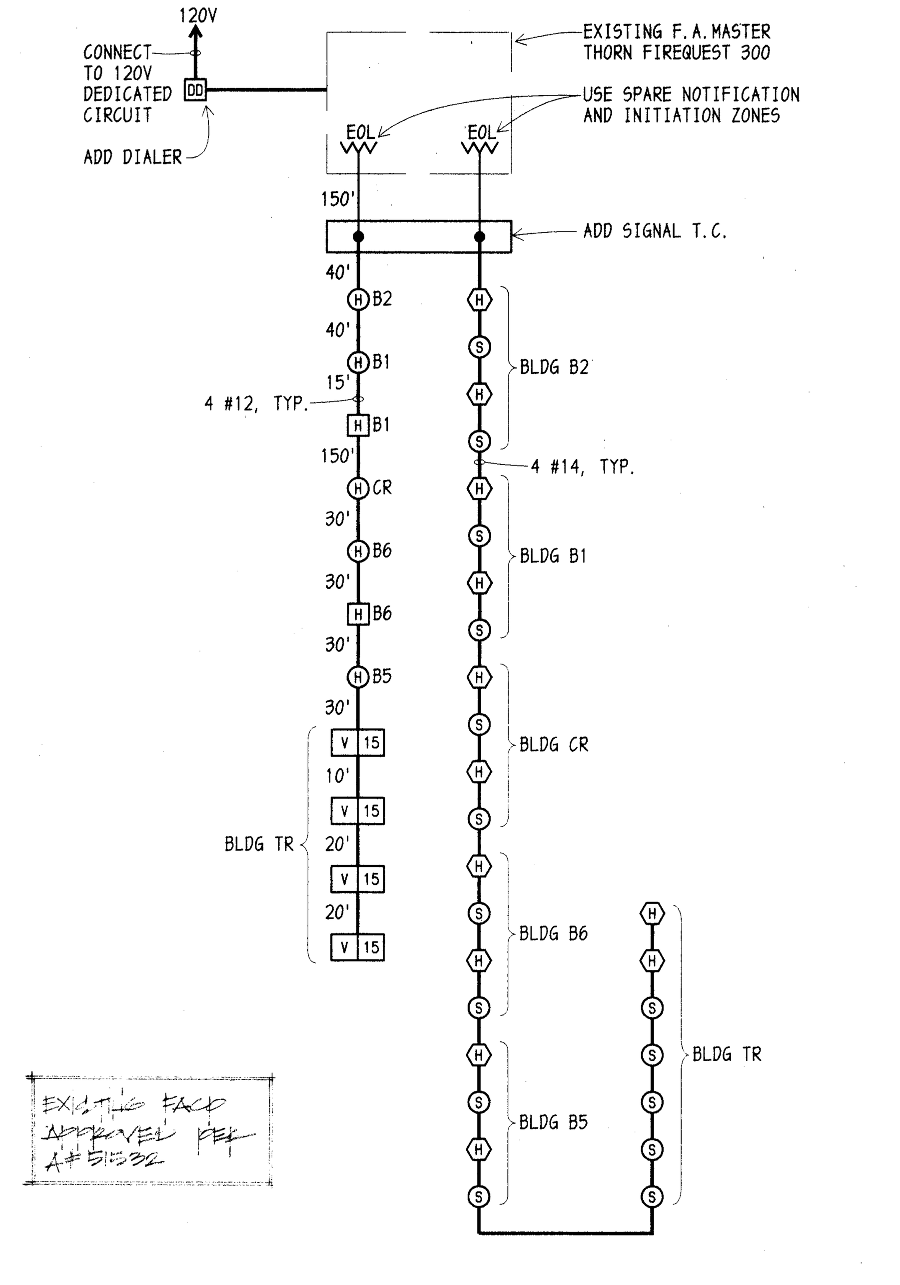


## 7 FIRE ALARM RISER DIAGRAM

NTS

ALL CONSTRUCTION W.P.

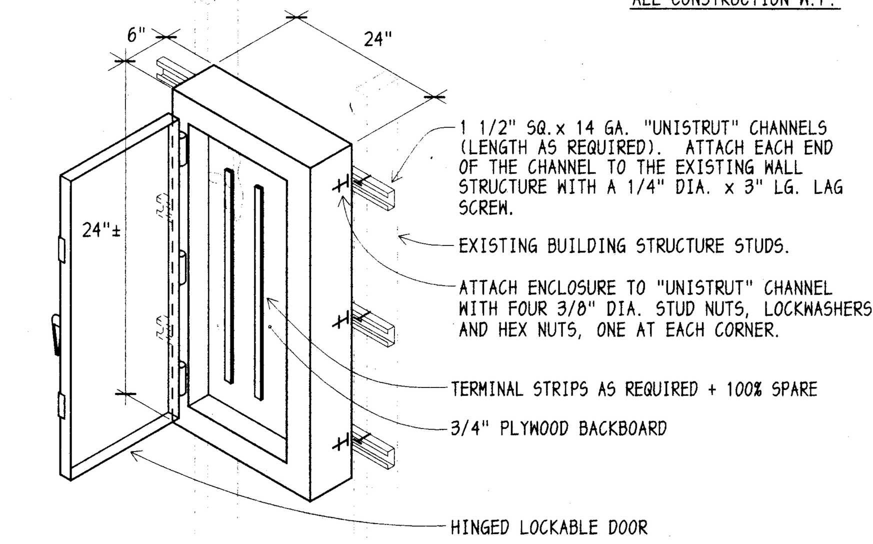


## 3 NEW SIGNAL TERMINAL CABINET

(CIRCLE AW)

NTS

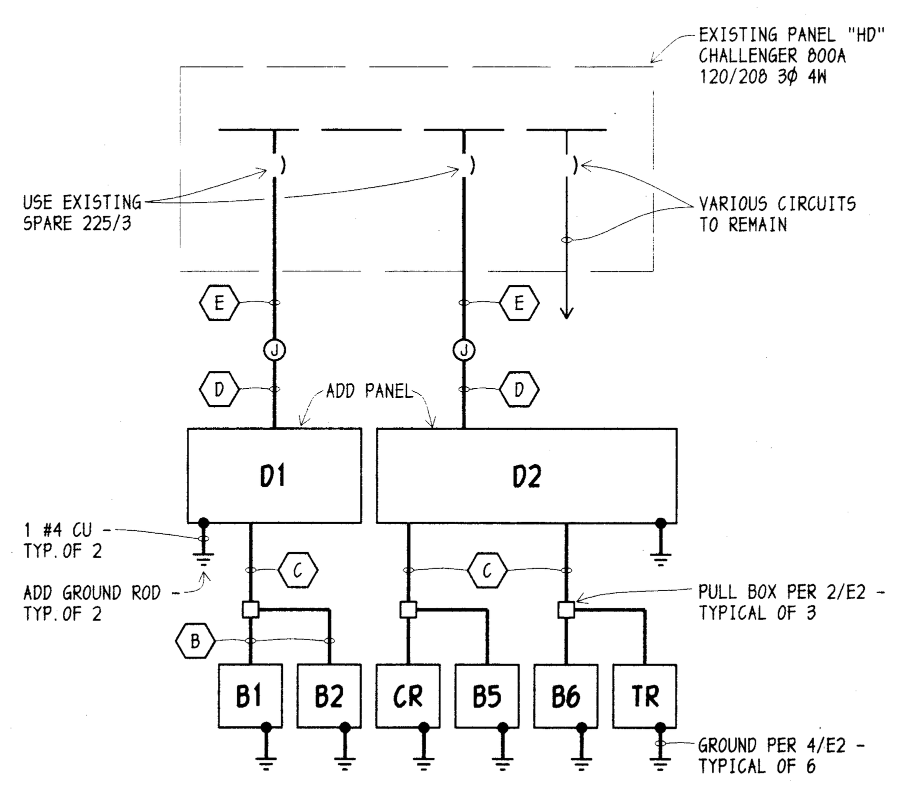


ONE LINE DIAGRAM NOTES:

- (B) 1 1/4"C - 3 #2 + 1 #8 GND
- (C) 2"C - 6 #2 + 2 #8 GND
- (D) PICK UP CIRCUIT AT J-BOX AND EXTEND TO NEW PANEL, 2 1/2"C - 4 #4/0 CU.
- (E) RECONNECT EXISTING FEEDER TO 225/3 BREAKER.

## 6 ONE LINE DIAGRAM

EXISTING PANEL HAS CAPACITY FOR ADDED LOAD

NTS

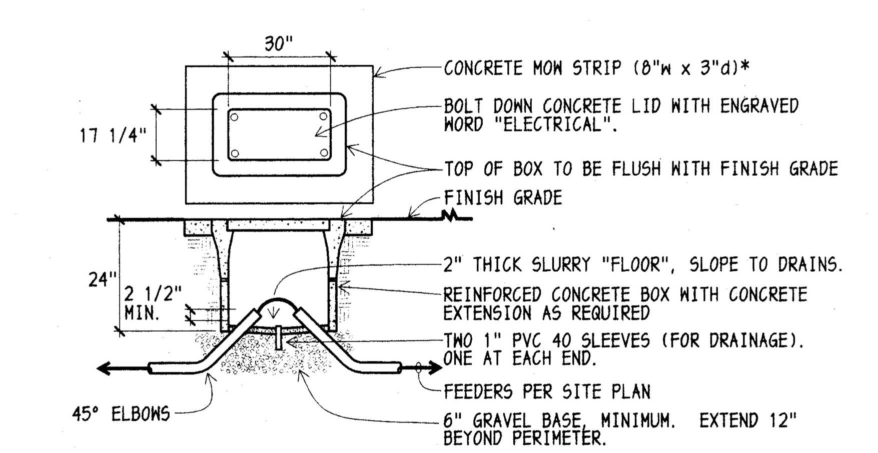


* NOTE: WHERE PULL BOX IS ADJACENT TO CONCRETE WALK, EXTEND MOWSTRIP TO CONNECT WITH WALK. FOAM SEAL ALL CONDUITS IN YARD BOXES.

** NOTE: INTERIOR DIMENSIONS MEASURED AT "BASE" OF PULL BOX.

## 2 PULL BOX

NTS

### PANEL "D1"

120/208 VOLTS 3 Ø 4 WIRE — 225 A. BUSSING NO A. MAIN BKR. — 20 CIRCUIT — BOLT-ON
10,000 BREAKER A.I.C. — 6" MAX. ENCL. DEPTH — SURFACE MOUNTING — NEMA 3R

| CIR. | BKR. | LOAD V.A. ØA | ØB | ØC | DESCRIPTION | DESCRIPTION | LOAD V.A. ØC | ØB | ØA | BKR. | CIR. |
|---|---|---|---|---|---|---|---|---|---|---|---|
| 1 | 100/2 | 7000 | | | RELOC. B1 | SPARE | | | — | 100/2 | 2 |
| 3 | | | 7000 | | | | | — | | | 4 |
| 5 | 100/2 | | | 7000 | RELOC. B2 | SPACE | | | | | 6 |
| 7 | | 7000 | | | | | | | | | 8 |
| 9 | | | | | SPACE | | | | | | 10 |
| 11 | | | | | | | | | | | 12 |
| 13 | | | | | | | | | | | 14 |
| 15 | | | | | | | | | | | 16 |
| 17 | | | | | | | | | | | 18 |
| 19 | | | | | | | | | | | 20 |

TOTAL LOADS: ØA: ØB: ØC:

### PANEL "D2"

120/208 VOLTS 3 Ø 4 WIRE — 225 A. BUSSING NO A. MAIN BKR. — 20 CIRCUIT — BOLT-ON
10,000 BREAKER A.I.C. — 6" MAX. ENCL. DEPTH — SURFACE MOUNTING — NEMA 3R

| CIR. | BKR. | LOAD V.A. ØA | ØB | ØC | DESCRIPTION | DESCRIPTION | LOAD V.A. ØC | ØB | ØA | BKR. | CIR. |
|---|---|---|---|---|---|---|---|---|---|---|---|
| 1 | 100/2 | 7000 | | | RELOC. CR | SPARE | | | — | 100/2 | 2 |
| 3 | | | 7000 | | | | | — | | | 4 |
| 5 | 100/2 | | | 7000 | RELOC. B5 | SPACE | | | | | 6 |
| 7 | | 7000 | | | | | | | | | 8 |
| 9 | 100/2 | | 7000 | | RELOC. B6 | | | | | | 10 |
| 11 | | | | 7000 | | | | | | | 12 |
| 13 | 100/2 | 4000 | | | RELOC. TR | | | | | | 14 |
| 15 | | | 4000 | | | | | | | | 16 |
| 17 | | | | | SPACE | | | | | | 18 |
| 19 | | | | | | | | | | | 20 |

TOTAL LOADS: ØA: ØB: ØC:

## FIRE ALARM/INTERCOM/PHONE LEGEND

FIRE ALARM

- EXISTING FIRE ALARM CONTROL PANEL THORN FIREQUEST 300
- V 15 — 15 CANDELA STROBE. MOUNT PER DETAIL GAMEWELL RSS-2415-FR (CSFM #7125-0785:141).
- H — EXTERIOR HORN WHEELOCK #MT12/24R (CSFM #7135-0785:118).
- (H) — INTERIOR HORN, WALL MOUNTED. WHEELOCK #AH-24-R (CSFM #7125-0785:131).
- DD (1) — DIGITAL DIALER ADEMCO 5110XM (CSFM #7165-0078:175).
- SD — SMOKE DETECTOR, CEILING MOUNTED GAMEWELL 55000-350 SMOKE DETECTOR WITH #45681-232 BASE (CSFM #7272-1394:100 AND #7300-1394:106).
- H (hexagon) — FIXED TEMPERATURE HEAT DETECTOR, MOUNT IN ATTIC GAMEWELL #40560 (200°F) (CSFM #7270-0061:001).

INTERCOM/TELEPHONE

- (1) ▽ — INTERCOM HANDSET RAULAND TC4333
- S — INTERIOR SPEAKER, CEILING MOUNTED RAULAND #US0221 WITH #ACC101 BAFFLE AND #ACC1104 T-BAR BRACKET
- S (square) — EXTERIOR SPEAKER, WALL MOUNTED AT +8'-0" AFG. ATLAS #AP-15TU WITH LOWELL SQLK-8-APF VANDAL RESISTANT GRILLE

"A" CABLE - WEST PENN WIRE #369

"B" CABLE - WEST PENN WIRE #AQC369

## FIRE ALARM/INTERCOM/PHONE LEGEND NOTES:

(1) CONNECTION TO A 24 HR., U.L. LISTED MONITORING COMPANY TO BE BY THE OWNER.

## VOLTAGE DROP CALCULATIONS FOR SIGNALING CIRCUITS

$$\text{VOLTAGE DROP} = \frac{\text{CURRENT} \times \text{WIRE LENGTH} \times 21.6}{\text{CIRC. MILS}}$$

$$\text{VOLTAGE DROP \%} = \frac{\text{VOLTAGE DROP}}{\text{APPLIED VOLTAGE}} \times 100$$

1. SIGNALING CIRCUIT #1

$$\frac{.569 \times 565' \times 21.6}{6530} = 1.1 \text{ V.D.}$$

$$\frac{1.1}{24} \times 100 = 4.5\ \%$$

## FIRE ALARM MASTER PANEL BATTERY CALCULATION

| DESCRIPTION | QUANTITY | SUPV. CURRENT EACH | SUPV. CURRENT SUB-TOTAL | ALARM CURRENT EACH | ALARM CURRENT SUB-TOTAL |
|---|---|---|---|---|---|
| MASTER PANEL | 1 | .5 | .5 | .6 | .6 |
| EXISTING NOTIFICATION DEVICES | 1 LOT | — | — | 2.4 | 2.4 |
| NEW INTERIOR HORNS | 5 | — | — | .041 | .21 |
| NEW EXTERIOR HORNS | 2 | — | — | .088 | .176 |
| NEW 15 CANDELA STROBE | 4 | — | — | .051 | .204 |
| NEW SMOKE DETECTORS | 15 | .000045 | .00007 | .052 | .78 |
| TOTALS | | | .5 | | 4.370 |

(1) TOTAL ALARM CURRENT OF 4.370 x .083 (5 MINUTES) .... = 0.363 A.H.
TOTAL SUPERVISORY CURRENT OF .5 x 24 HOURS ........ = 12.0 A.H.
TOTAL AMP HOURS REQUIRED .......................... 12.363 A.H.
x 1.2 SAFETY FACTOR
14.836 A.H.

(1) OWNER TO INCREASE POWER SUPPLY TO 8 AMPS
EXISTING BATTERIES ARE 18 AMP-HOUR

## CODE, RULES & REGULATIONS

ALL WORK AND MATERIALS SHALL COMPLY WITH THE LATEST REGULATIONS OF THE STATE FIRE MARSHAL, CALIFORNIA CODE OF REGULATIONS, SERVING UTILITY COMPANIES AND OTHER APPLICABLE STATE ORDINANCES. NOTHING IN THESE PLANS OR SPECIFICATIONS IS TO BE CONSTRUED AS TO PERMIT WORK NOT CONFORMING TO THESE CODES. WHERE WORK OF A HIGHER DEGREE IS INDICATED IN THE PLANS OR SPECIFICATIONS THIS REQUIREMENT SHALL GOVERN.

## GENERAL NOTES

1. ALL WORK AT SIGNAL SYSTEM HEAD END EQUIPMENT IS BY OWNER.
2. SPEAKERS/PULL STATIONS/HORNS(INTERIOR AND EXTERIOR)/HANDSETS AND DIGITAL FIRE ALARM DIALERS WILL BE PROVIDED TO CONTRACTOR BY OWNER. INSTALLATION IS BY CONTRACTOR.
3. BATTERY CLOCKS ARE PROVIDED/INSTALLED BY OWNER.
4. INTRUSION ALARM, TV, DATA WORK IS BY OWNER.

## SEISMIC ANCHORAGE REQUIREMENTS

ALL ELECTRICAL EQUIPMENT SHALL BE BRACED OR ANCHORED TO RESIST A HORIZONTAL FORCE ACTING IN ANY DIRECTION USING THE FOLLOWING CRITERIA:

EQUIPMENT ON GRADE — TO COMPLY WITH 1998 CBC, TITLE 24, SECTION #1632A

EQUIPMENT ON STRUCTURE

FOR FLEXIBLY MOUNTED EQUIPMENT, USE 4 x THE ABOVE VALUES, AND FOR SIMULTANEOUS VERTICAL FORCE USE 1/3 x THE HORIZONTAL FORCE.

THE ABOVE VALUES ARE FOR AN IMPORTANCE FACTOR OF I = 1.0 AND SEISMIC ZONE, Z= 0.4.

FOR MULTI-PURPOSE BUILDINGS, PERCENTAGE OF OPERATING WEIGHT SHALL BE 125% OF VALUES NOTED ABOVE.

WHERE ANCHORAGE DETAILS ARE NOT SHOWN ON THE DRAWINGS, THE FIELD INSTALLATION SHALL BE SUBJECT TO THE APPROVAL OF THE ELECTRICAL ENGINEER AND THE FIELD ENGINEER OF THE DIVISION OF THE STATE ARCHITECT.

## DIVISION OF THE STATE ARCHITECT APPLICABLE CODES AND STANDARDS

CODES:

1998 CALIFORNIA BUILDING STANDARDS ADMINISTRATIVE CODES, PART 1, TITLE 24

1998 CALIFORNIA BUILDING CODE, PART 2, TITLE 24 (1997 UNIFORM BUILDING CODE AND CALIFORNIA AMENDMENTS)

1998 CALIFORNIA ELECTRICAL CODE, PART 3, TITLE 24 (1996 NATIONAL ELECTRICAL CODE AND CALIFORNIA AMENDMENTS)

1998 CALIFORNIA MECHANICAL CODE, PART 4, TITLE 24 (1997 UNIFORM MECHANICAL CODE AND CALIFORNIA AMENDMENTS)

1998 CALIFORNIA PLUMBING CODE, PART 5, TITLE 24 (1997 UNIFORM PLUMBING CODE AND CALIFORNIA AMENDMENTS).

1998 CALIFORNIA FIRE CODE, PART 9, TITLE 24 (1997 UNIFORM FIRE CODE AND CALIFORNIA AMENDMENTS)

CALIFORNIA REFERENCED STANDARDS CODE, PART 12, TITLE 24 (1997 UNIFORM BUILDING CODE STANDARDS AND CALIFORNIA AMENDMENTS)

PUBLIC SAFETY, TITLE 19, CALIFORNIA CODE OF REGULATIONS, STATE FIRE MARSHAL REGULATIONS

STANDARDS AND GUIDES:

NFPA 72, NATIONAL FIRE ALARM CODE 1996 EDITION, WITH CALIFORNIA AMENDMENTS.

POLICY #95-03, FIRE AND LIFE SAFETY, DIVISION OF THE STATE ARCHITECT - OFFICE OF REGULATION SERVICES.

## ELECTRICAL SYMBOLS (1)

ALL DIMENSIONS TO CENTER OF BOX, U.O.N.

| | |
|---|---|
| ⟵⟶ | CONDUIT RUN IN WALL OR ATTIC (1/2"C - 2 #12 AWG THHN + 1 #12 GND) |
| ⟵ - - ⟶ | CONDUIT RUN IN FLOOR OR UG (1/2"C - 2 #12 AWG THHN + 1 #12 GND) |
| —⅃ | CONDUIT STUB - CAPPED AND LABELED. |
| (1) | ELECTRICAL KEYNOTE #1, REFER TO NOTES ON SAME SHEET. |
| U.O.N. | UNLESS OTHERWISE NOTED |
| W.P. | WEATHERPROOF |
| ▭ | TERMINAL CABINET (SIZE AS SHOWN) |
| ▬ | ELECTRICAL PANELBOARD |
| (J) | JUNCTION BOX |

## ELECTRICAL SYMBOLS NOTES:

(1) SEE FIRE ALARM/INTERCOM/PHONE LEGEND FOR FIRE ALARM AND INTERCOM SYMBOLS.

## FIRE ALARM SYSTEM REQUIREMENTS

THE FIRE ALARM SYSTEM SHALL CONFORM TO CALIFORNIA BUILDING CODE, SECTION 305.9; CALIFORNIA ELECTRICAL CODE, ARTICLE 760 AND CALIFORNIA FIRE CODE, ARTICLE 10.

UPON COMPLETION OF THE INSTALLATION OF THE FIRE PROTECTIVE SIGNALING EQUIPMENT, A SATISFACTORY TEST OF THE ENTIRE SYSTEM SHALL BE MADE IN THE PRESENCE OF THE ENFORCING FIRE AGENCY, NFPA 72. IF TESTING RESULTS DETERMINE FIRE ALARM AUDIBILITY DOES NOT MEET 15db OVER AMBIENT NOISE LEVELS, ADDITIONAL FIRE ALARM SIGNALING DEVICES MAY BE REQUIRED BY THE ENFORCING AGENCY PER CALIFORNIA FIRE CODE.

A CERTIFICATE OF COMPLETION SHALL BE PROVIDED TO THE OWNER PER NFPA 72, CHAPTER 1 AND THE CALIFORNIA FIRE CODE.

## FIRE ALARM LEVEL OF AUDIBILITY

ALARM INDICATING DEVICES OF A FIRE ALARM SYSTEM INTENDED TO ALERT ALL OCCUPANTS SHALL BE SO LOCATED AND UNOBSTRUCTED AS TO CAUSE A LEVEL OF AUDIBILITY OF NOT LESS THAN 15 DB ABOVE AMBIENT NOISE LEVELS MEASURED FOUR FEET ABOVE THE FLOOR INSIDE BUILDING.

AMBIENT NOISE LEVELS SHALL BE CONSTRUED TO MEAN THAT WHICH CAN NORMALLY BE EXPECTED TO EXIST WHEN THE FACILITY, BUILDING, ROOM OR AREA IS FUNCTIONING UNDER NORMAL OPERATIVE OR WORKING CONDITIONS.

THE FIRE ALARM SIGNAL SHALL COMPLY WITH THE CALIFORNIA EDUCATION CODE, SECTIONS 32000 AND 32004, AND BE A TEMPORAL PATTERN, CODE 3.

## FIRE ALARM OPERATIONAL MATRIX

| DEVICE | ACTIVATE EVACUATION STROBES/HORNS | ANNUNCIATE AT EXIST'G FIRE ALARM CONTROL PANEL | IF POWER FAILURE, TRANSFER TO BATTERY POWER |
|---|---|---|---|
| MANUAL PULL STATION | X | X | — |
| SMOKE DETECTOR | X | X | — |
| HEAT DETECTOR | X | X | — |
| FIRE ALARM CONTROL PANEL | — | — | X |

## COMPLETE AUTOMATIC FIRE ALARM PLAN SUBMITTAL

THE FIRE ALARM SYSTEM SHOWN ON THESE PLANS HAS BEEN SUBMITTED AND APPROVED BY THE DIVISION OF THE STATE ARCHITECT. ANY SUBSTITUTION OF THE FIRE ALARM SYSTEM SHALL BE RESUBMITTED TO THE ARCHITECT FOR REVIEW AND APPROVAL. THE CONTRACTOR SHALL PAY ANY ADDITIONAL FEES THAT ARE INCURRED DUE TO THIS SUBSTITUTION.

| MARK | DATE | REVISIONS |
|---|---|---|
| 1 | | |
| 2 | | |
| 3 | | |
| 4 | | |
| 5 | | |

CHECK AND VERIFY ALL DIMENSIONS BEFORE PROCEEDING WITH THE WORK. REPORT DISCREPANCIES TO THE ARCHITECT. ALL CONSTRUCTION SHALL CONFORM TO THE C.B.C.

# HORACE MANN ELEMENTARY

## SITE IMPROVEMENTS FOR PORTABLE BUILDINGS

FOR

BAKERSFIELD CITY SCHOOL DISTRICT

BAKERSFIELD, KERN COUNTY, CALIFORNIA

IDENTIFICATION STAMP DIV. OF THE STATE ARCHITECT OFFICE OF REGULATION SERVICES
APPL: 03-106605
FILE: 15-6
AC: [illegible] FLS: [illegible] SS: [illegible]
DATE: JUN 0 4 2003

ARCHITECT SC inc.
1301 L STREET
BAKERSFIELD, CA 93301
PH: (661) 327-1632
FAX: (661) 327-2339
LICENSED ARCHITECT STEPHEN J. CORBIN No. C-16788 STATE OF CALIFORNIA
STEPHEN J. CORBIN, NCARB, AIA

REGISTERED PROFESSIONAL ENGINEER GERALD CORNELIUS No. 7198 Exp. 9/30/06 ELECTRICAL STATE OF CALIFORNIA
CORNELIUS CONSULTING GROUP, INC.
Consulting Electrical Engineers
131 S. Dunworth - Ph.733-2671
Visalia, California 93292-6705

SIGNALS PLANS, DETAILS, NOTES AND SCHEDULES

JOB NO. 1053
DRAWN :
CHECKED :
DATE : 06/17/02

E.2
OF 2 SHEETS