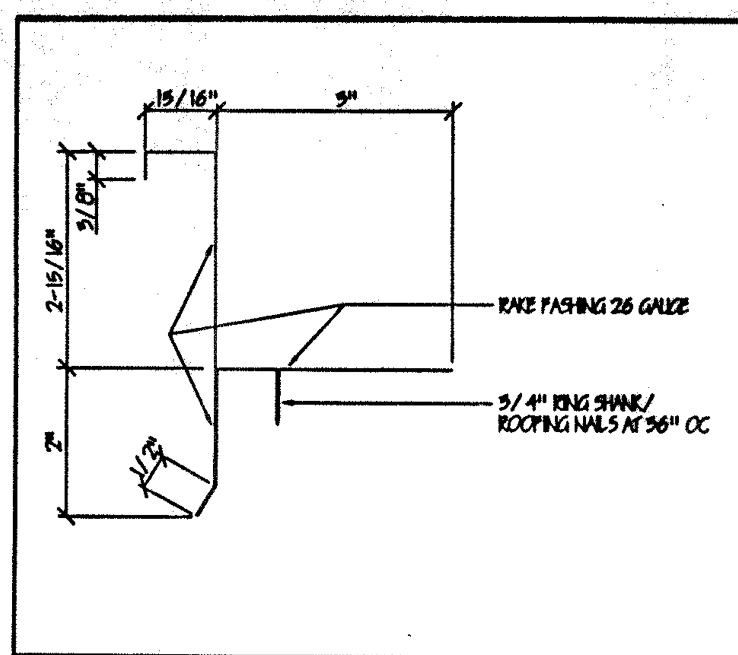

1 RAKE FLASHING SCALE: 3"=1'-0"

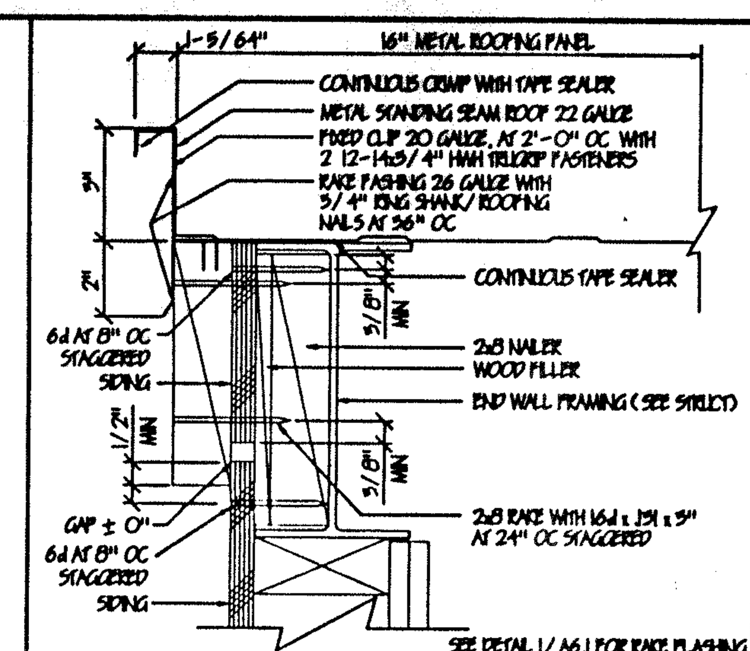

6 ROOF RAKE SCALE: 3"=1'-0"

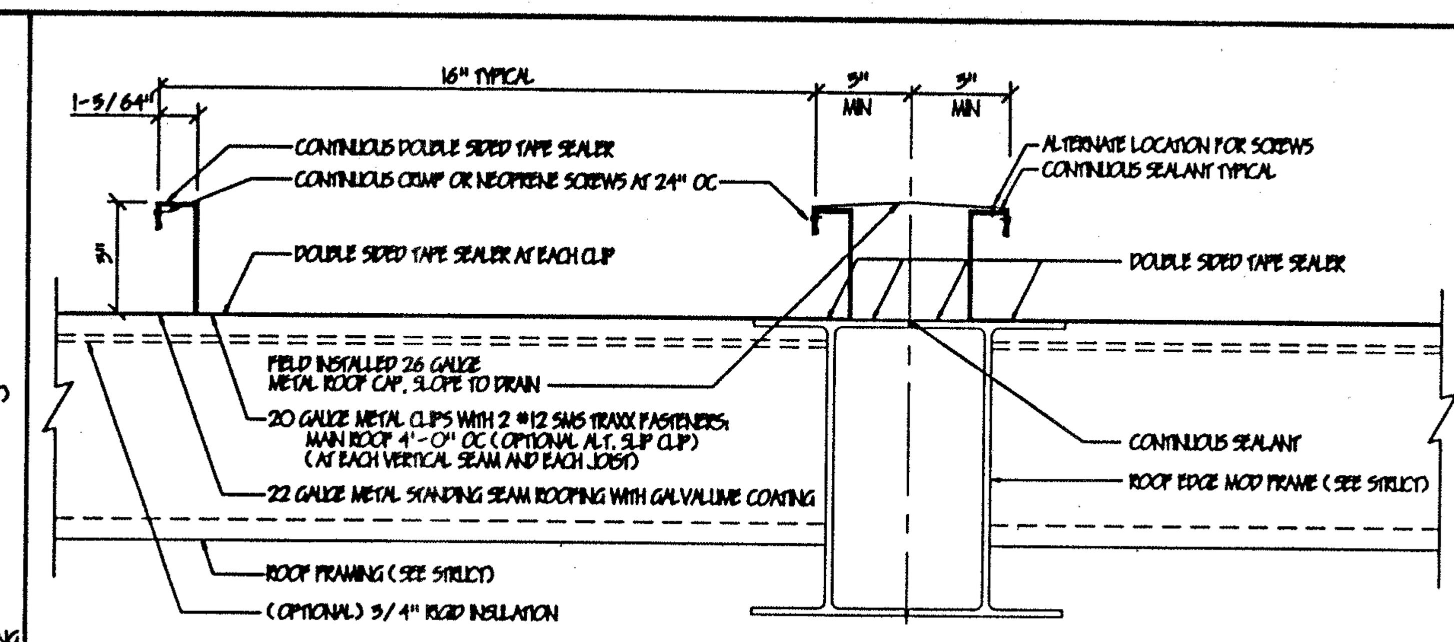

11 MODULE LINE ROOF CAP SCALE: 3"=1'-0"

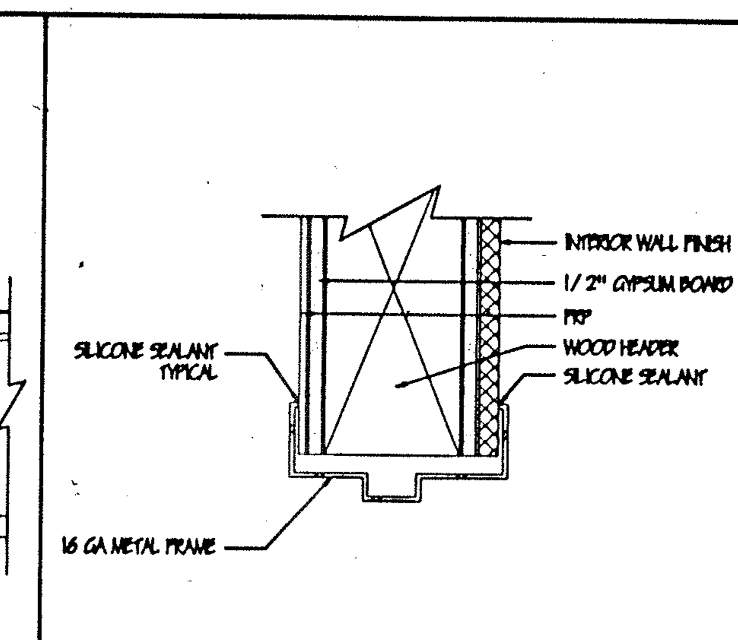

19 INT. DOOR HEAD SCALE: 3"=1'-0"

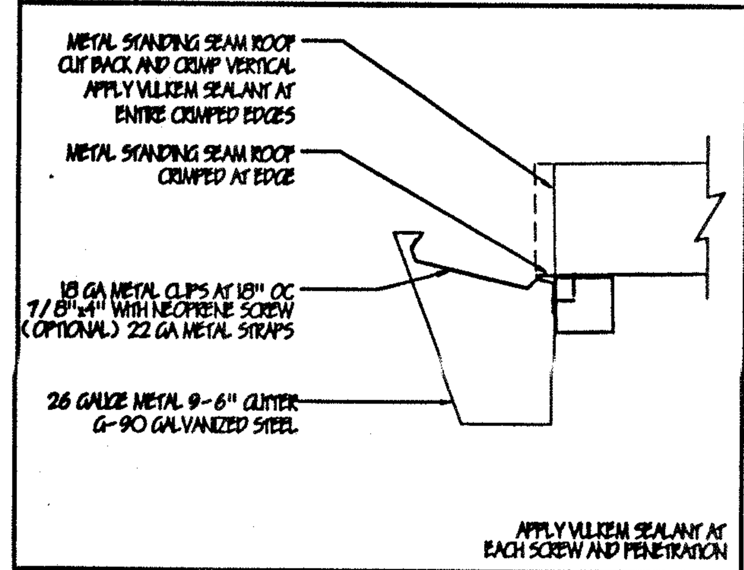

2 GUTTER SCALE: 3"=1'-0"

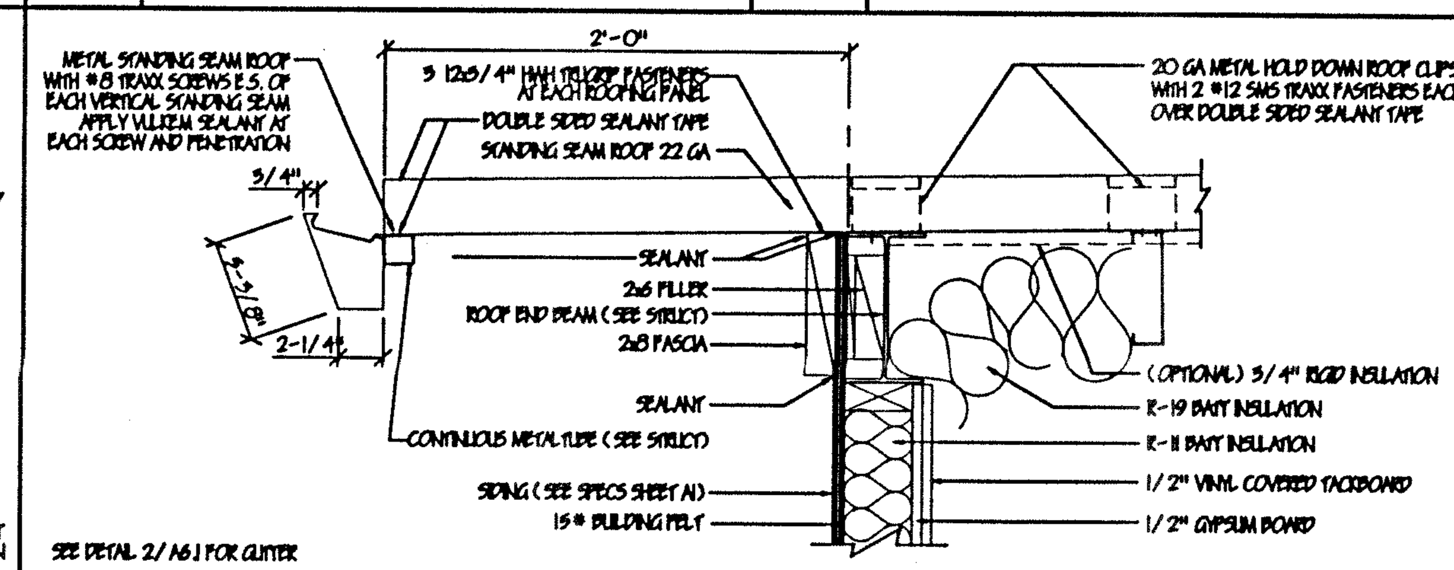

7 REAR OVHG SCALE: 1-1/2"=1'-0"

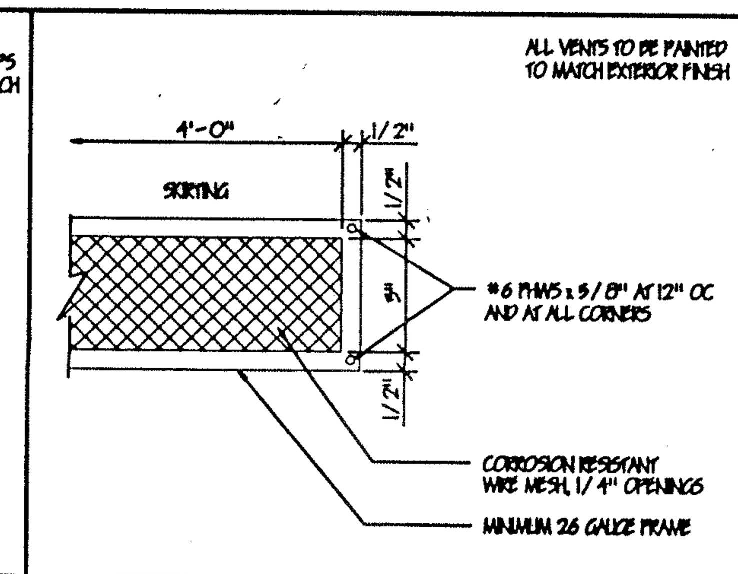

15 VENT SCALE: 3"=1'-0"

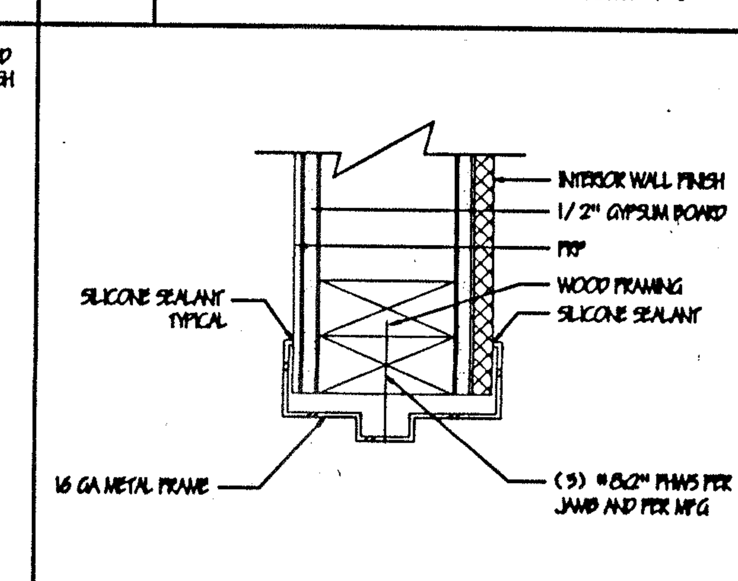

20 INT. DOOR JAMB SCALE: 3"=1'-0"

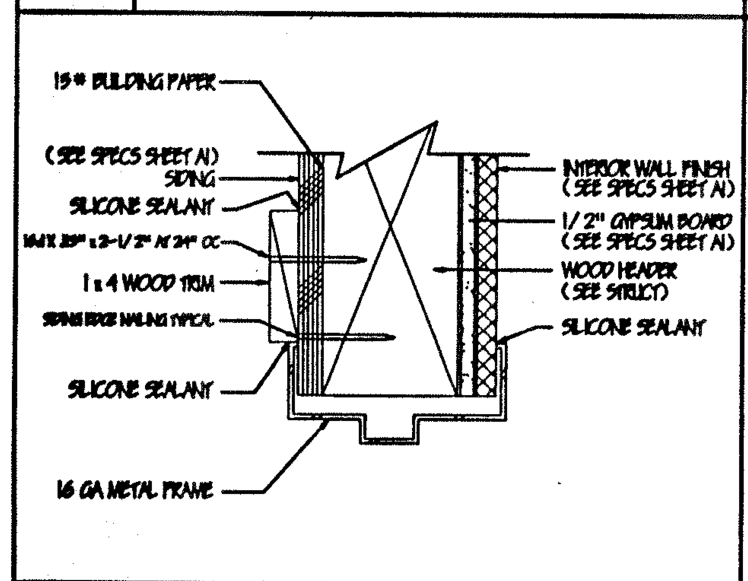

3 DOOR HEAD SCALE: 3"=1'-0"

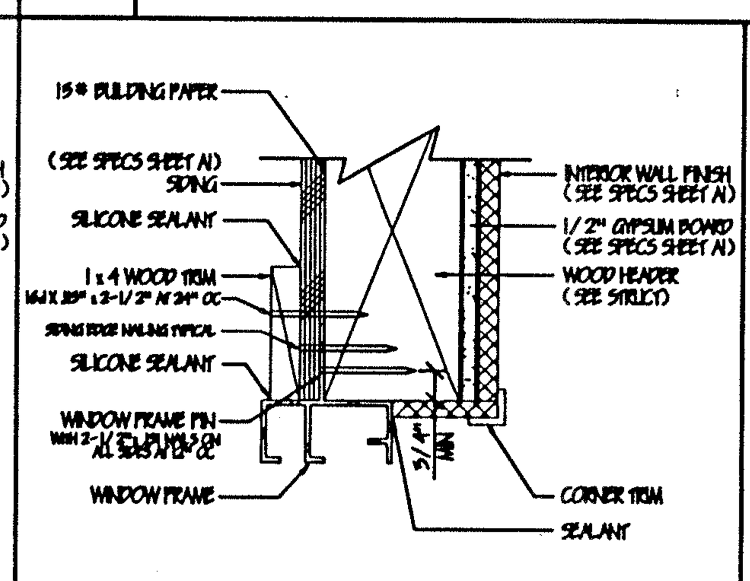

8 WINDOW HEAD SCALE: 3"=1'-0"

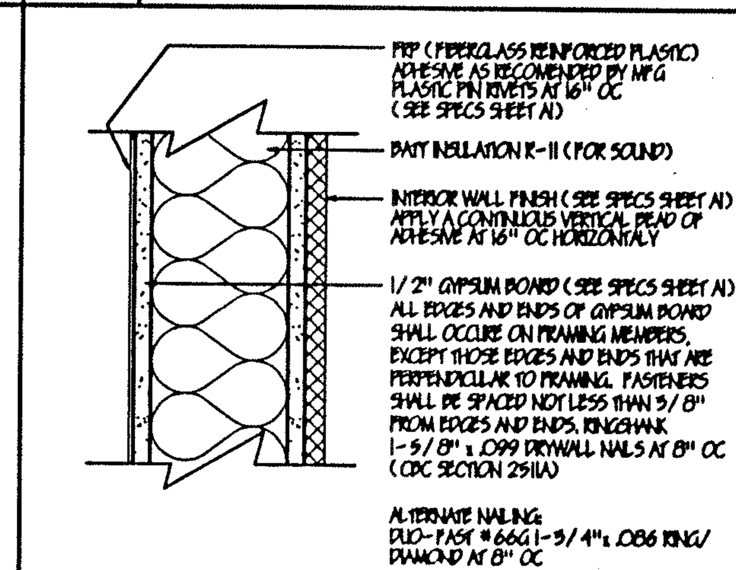

16 INT. WALL FINISH SCALE: 3"=1'-0"

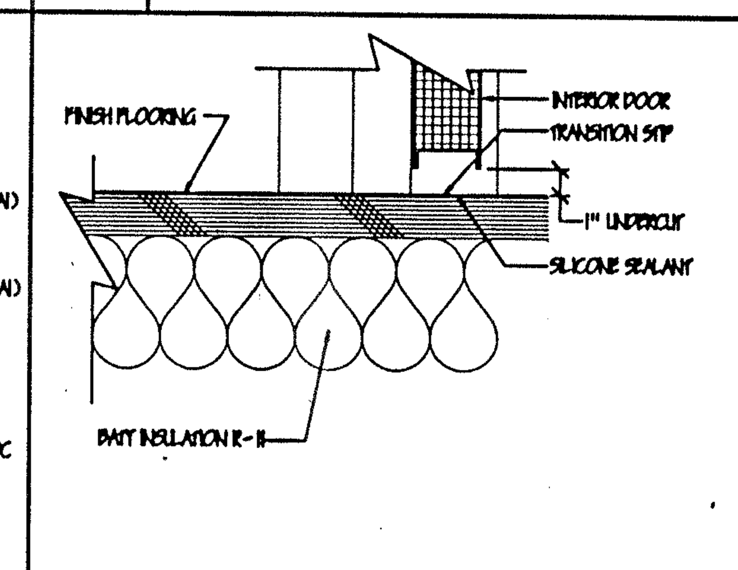

21 DOOR THRESHOLD SCALE: 3"=1'-0"

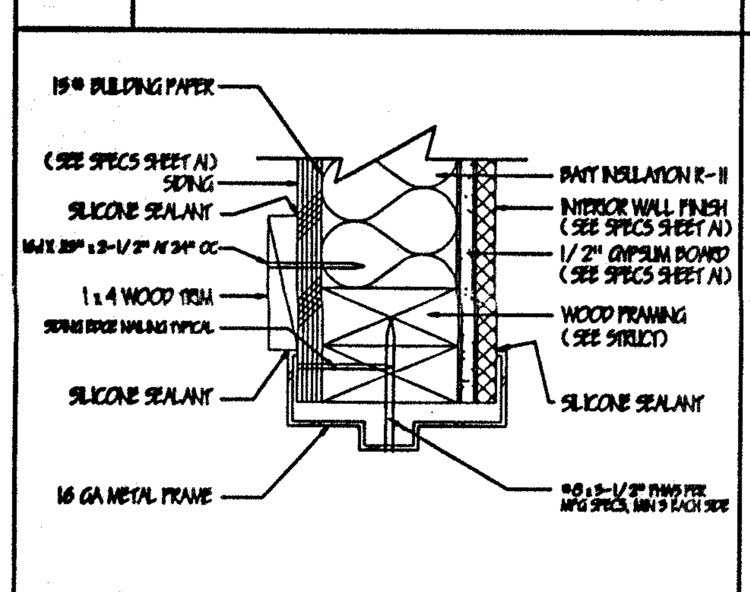

4 DOOR JAMB SCALE: 3"=1'-0"

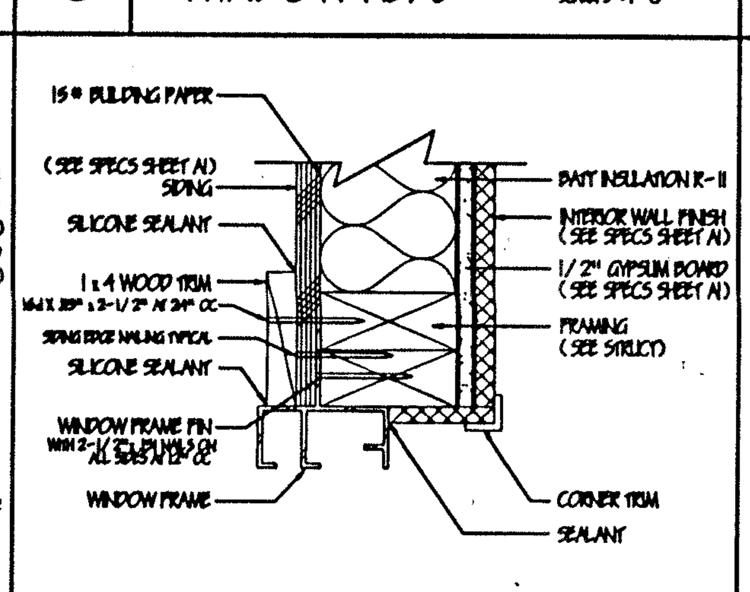

9 WINDOW JAMB SCALE: 3"=1'-0"

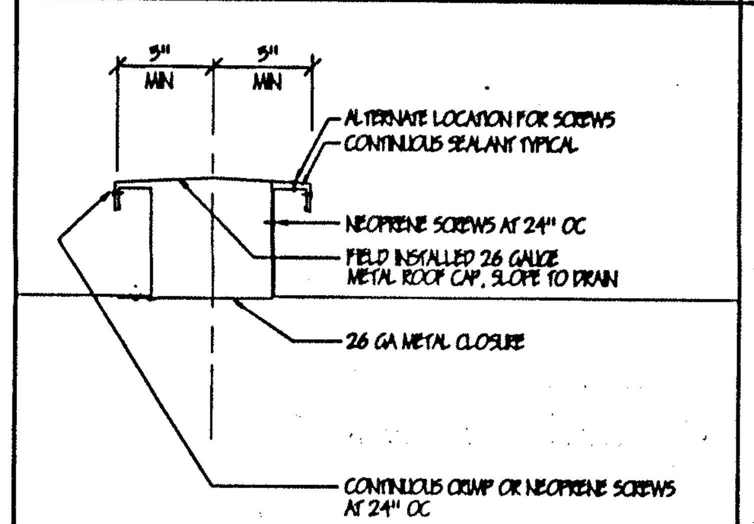

17 MOD CLOSURE SCALE: 3"=1'-0"

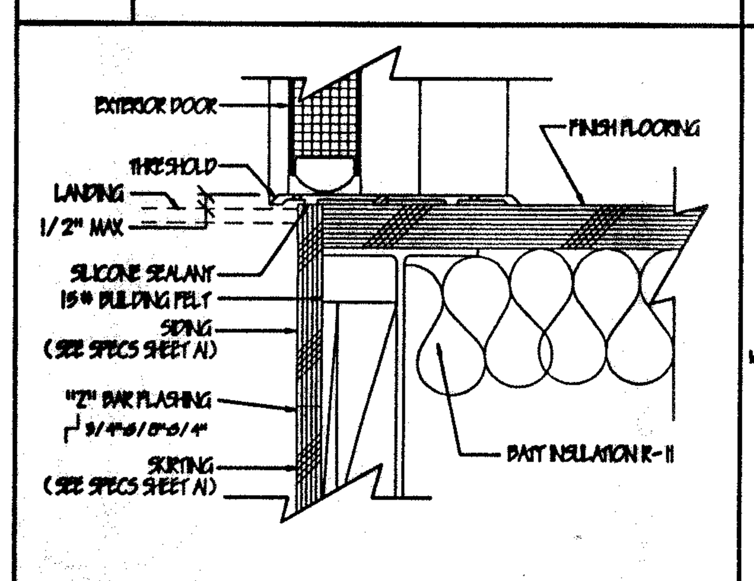

5 DOOR THRESHOLD SCALE: 3"=1'-0"

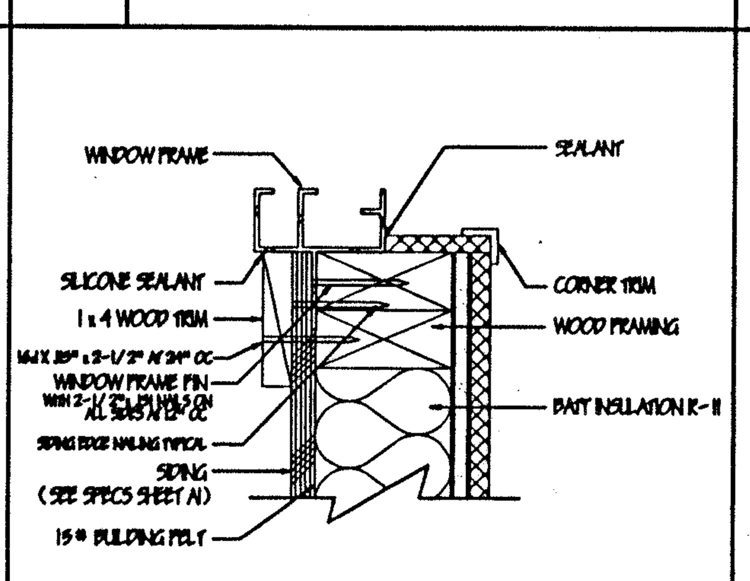

10 WINDOW SILL SCALE: 3"=1'-0"

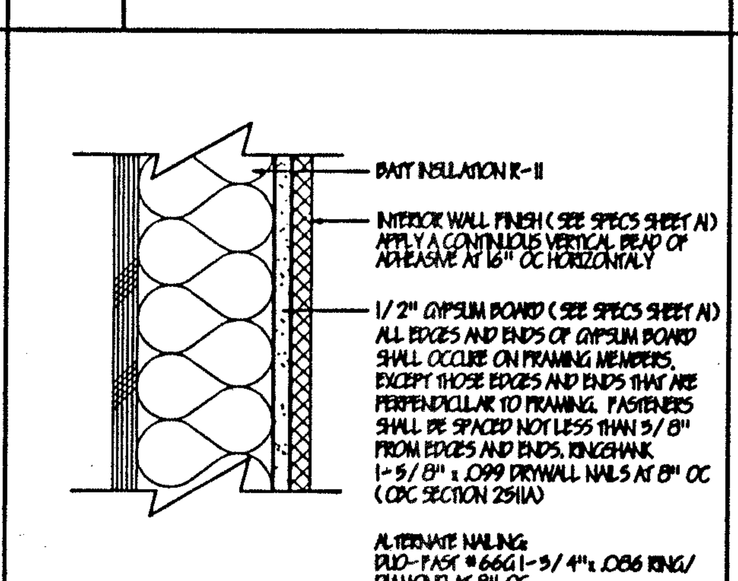

14 WALL FINISH SCALE: 3"=1'-0"

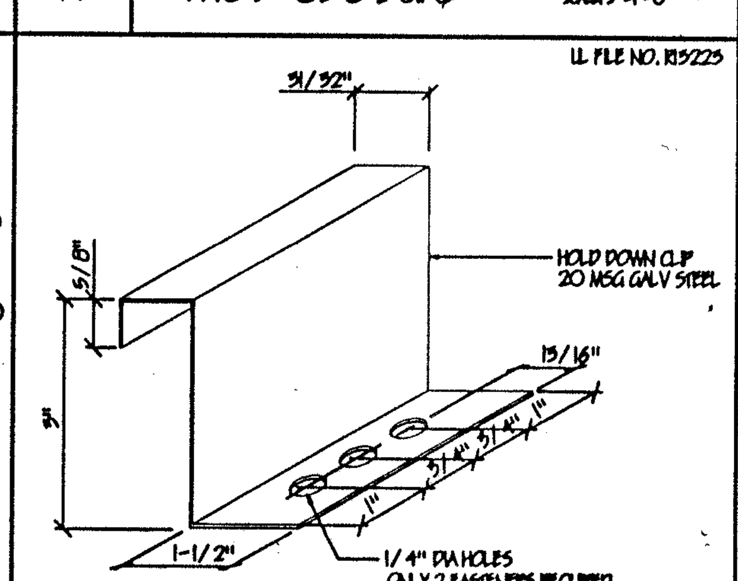

18 ROOF CLIP SCALE: 6"=1'-0"

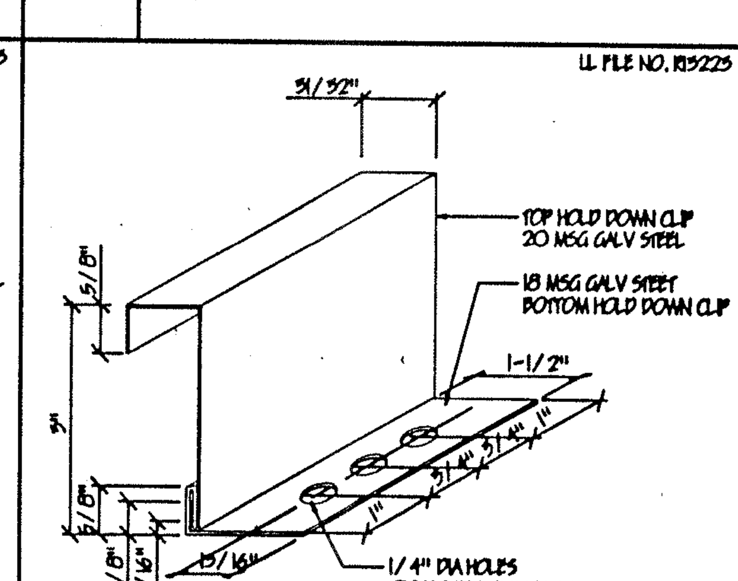

23 ALT. ROOF CLIP SCALE: 6"=1'-0"

THESE DRAWINGS AND / OR SPECIFICATIONS AND / OR CALCULATIONS FOR THE ITEMS LISTED BELOW HAVE BEEN PREPARED BY OTHER DESIGN PROFESSIONALS WHO ARE LICENSED AND AUTHORIZED TO PREPARED SUCH DRAWINGS IN THIS STATE. THESE DOCUMENTS HAVE BEEN EXAMINED BY ME AND HAVE BEEN FOUND TO MEET THE APPROPRIATE REQUIREMENTS OF TITLE 24, CALIFORNIA CODE OF REGULATIONS AND THE PROJECT SPECIFICATIONS PREPARED BY ME.
THE ITEMS LISTED BELOW ARE ACCEPTABLE FOR INCORPORATION INTO THE CONSTRUCTION OF THIS PROJECT FOR WHICH I AM THE INDIVIDUAL DESIGNATED TO BE IN GENERAL RESPONSIBLE CHARGE (OR FOR WHICH I HAVE BEEN DELIGATED RESPONSIBILITY FOR THIS PORTION OF THE WORK).
LIST ITEMS REVIEWED AND ACCPTED. (FOR DRAWINGS, ALIST OF ALL ACCEPTED DRAWINGS ARE TO BE ATTACHED).

LICENSED ARCHITECT STEPHEN J. CORBIN No. C-16788 REN 11/30/99 STATE OF CALIFORNIA

Stephen J. Corbin, NCARB, AIA DATE 1-15-99

LICENSE # C-16788

EXP. DATE 11/30/99

GENERAL NOTES

ALL FINISHES SHALL COMPLY WITH CBC CHAPTERS 5, 6, 7, 8, AND 10

ABBREVIATIONS:

AFF	ABOVE FINISH FLOOR
AL OR ALUM	ALUMINUM
E.S.	EACH SIDE
FNDN	FOUNDATION
GA	GAUGE
HM	HOLLOW METAL
HWH	HEX WASHER HEAD
INT	INTERIOR
MAX.	MAXIMUM
MFG	MANUFACTURER
MIN.	MINIMUM
NO.	NUMBER
NR	NOT RATED
OVHG	OVERHANG
PR	PAIR
SMS	SHEET METAL SCREW
STRUCT	STRUCTURAL

LEGEND

- BATT INSULATION
- RIGID INSULATION (OPTIONAL)
- WOOD MEMBER
- BLOCKING
- GYPSUM BOARD
- PLYWOOD

APPROVALS

FEB 1 1999

IDENTIFICATION STAMP
DIV. OF THE STATE ARCHITECT
OFFICE OF REGULATION SERVICES

PC 330

AC FLS SS

DATE 9/23/97

NOV 20

NORMAN A. GEIGER
AIA, CSI, CDT, ICBO
P.O. BOX 41054
Sacramento, CA 95841
(916) 332-2453 FAX
(916) 332-2453 PHONE

GRAFICS ARCHITECTURAL SERVICES
GEIGER

PACESETTER INDUSTRIES, INC.
P.O. BOX 1131, MODESTO, CA 95353 (209) 521-1600

24x40 RELOCATABLE BUILDING

SHEET CONTENTS:
GENERAL NOTES
DETAILS

DATE:		APRIL 28, 1997
REV. #1	△	MAY 15, 1997
REV. #2	△	JUNE 20, 1997
REV. #3	△	AUGUST 1, 1997
REV. #4	△	AUGUST 26, 1997
REV. #5	△	SEPT 25, 1997
DRAWING SCALE:		AS SHOWN
PROJECT NUMBER:		97-05

SHEET A6.1 OF