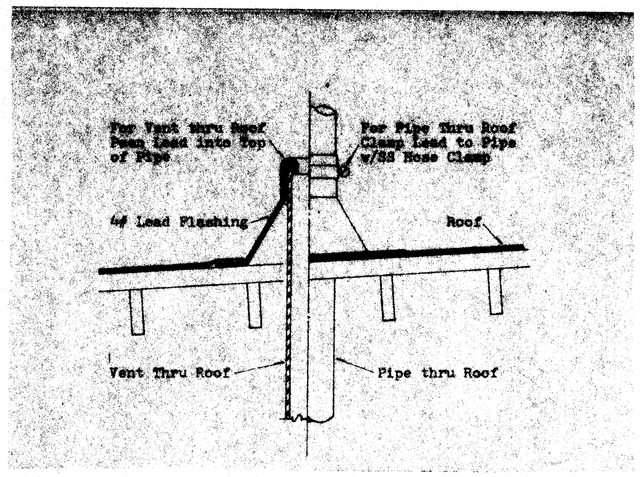

PIPE & VENT THRU ROOF DETAIL NTS. (1)

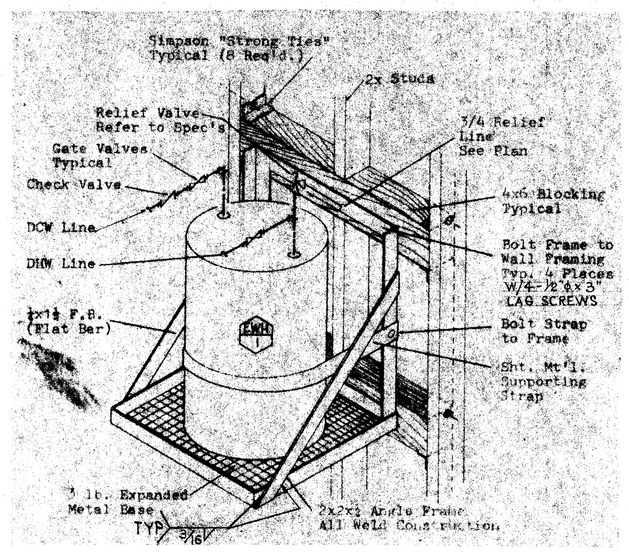

E.W.H. MOUNTING DETAIL (MOUNTED ON WALL) NTS. (4)

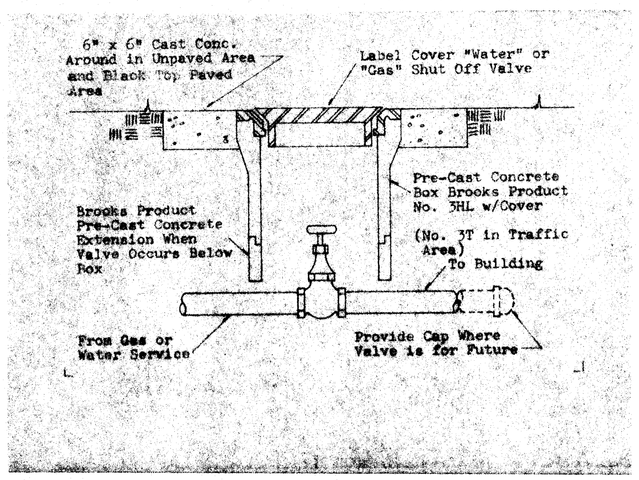

SHUT-OFF VALVE IN YARDBOX DETAIL NTS. (2)

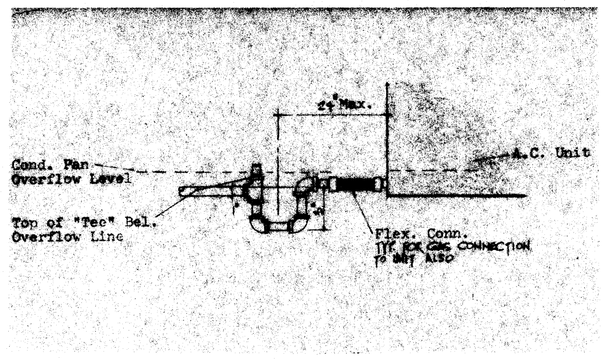

CONDENSATE TRAP DETAIL NTS. (5)

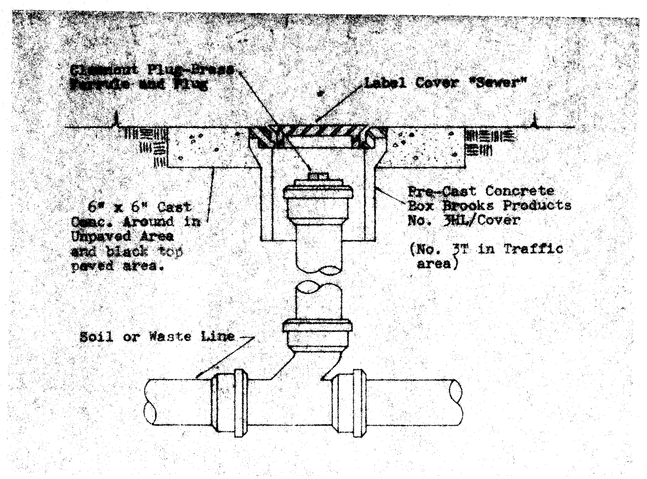

CLEANOUT TO GRADE DETAIL NTS. (3)

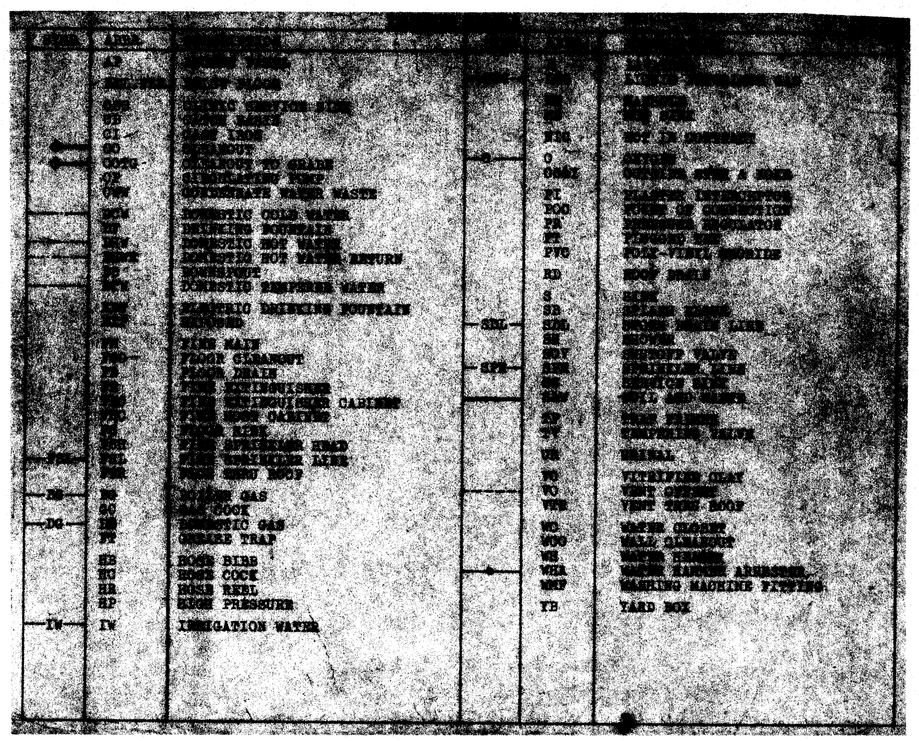

THE ABOVE DRAWINGS AND SPECIFICATIONS AND IDEAS, DESIGNS AND ARRANGEMENTS REPRESENTED THEREBY ARE THE PROPERTY OF THE ARCHITECT AND WERE PREPARED FOR USE ON THIS PROJECT ONLY AND SHALL NOT BE USED, DISCLOSED TO OTHERS OR USED IN CONNECTION WITH ANY WORK ON PROJECT OTHER THAN THE SPECIFIC PROJECT FOR WHICH THEY HAVE BEEN PREPARED AND DEVELOPED WITHOUT THE WRITTEN CONSENT OF THE ARCHITECT. VISUAL CONTACT WITH THESE DRAWINGS OR SPECIFICATIONS SHALL CONSTITUTE CONCLUSIVE EVIDENCE OF ACCEPTANCE OF THESE RESTRICTIONS.
WRITTEN DIMENSIONS ON THESE DRAWINGS SHALL HAVE PRECEDENCE OVER SCALED DIMENSIONS. CONTRACTORS SHALL VERIFY AND BE RESPONSIBLE FOR ALL DIMENSIONS AND CONDITIONS ON THE JOB AND THIS OFFICE MUST BE NOTIFIED OF ANY VARIATIONS FROM THE DIMENSIONS AND CONDITIONS SHOWN BY THESE DRAWINGS. SHOP DETAILS MUST BE SUBMITTED TO THIS OFFICE FOR APPROVAL BEFORE PROCEEDING WITH FABRICATION.

8/74 DIETERICH-POST CLEARPRINT 1000H

APPROVED
APR 7 1978
by [illegible]
DIVISION ENGR.

CONSULTING ENGINEERS
STRUCTURAL MECHANICAL ELECTRICAL
CLARK-WOOD APPROVED APR 7 78
[illegible] for DIVISION ENGR.

M. W. ERICSON, MECHANICAL ENGR
and ASSOCIATES
12 Montecito St. 327-9438
Bakersfield, California 93305
[illegible] ME 7323

DATE	PRINTS ISSUED FOR:	MARK	DATE	REVISIONS
		1		
		2		
		3		
		4		
		5		

DRAWN L.M.
DATE 4-12-78
JOB NO. 77-91-1
CHECK'D E.H.W.

ROBERT N. EDDY C-895
WILLIAM H. PAYNTER C-1654
DONALD W. BENFRO C-5283

PLUMBING DETAILS & LEGEND

ADDITIONS & ALTERATIONS. HORACE MANN SCHOOL
BAKERSFIELD CITY SCHOOL DISTRICT
BAKERSFIELD, CALIFORNIA

P 4 OF 4 SHEETS

EDDY · PAYNTER · BENFRO & ASSOCIATES
A.I.A. ARCHITECTS - 5405 STOCKDALE HWY. BAKERSFIELD, CALIFORNIA 93309 - (805) 832-1105