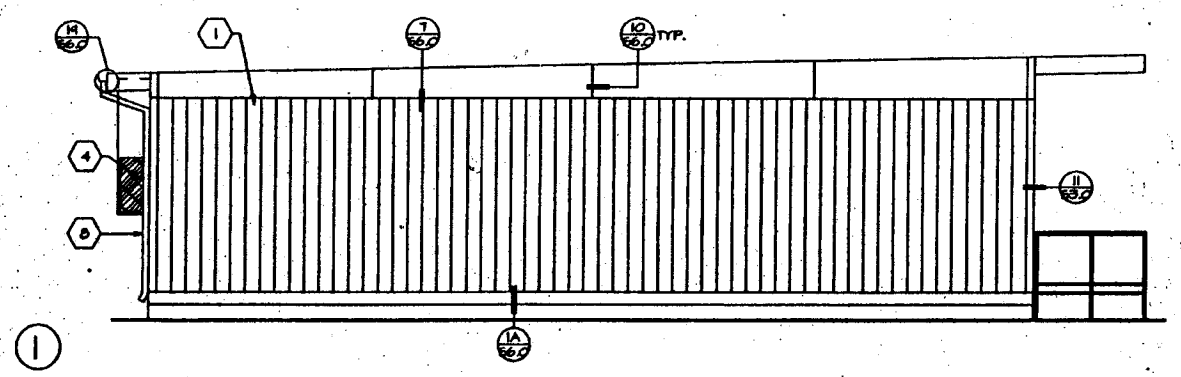

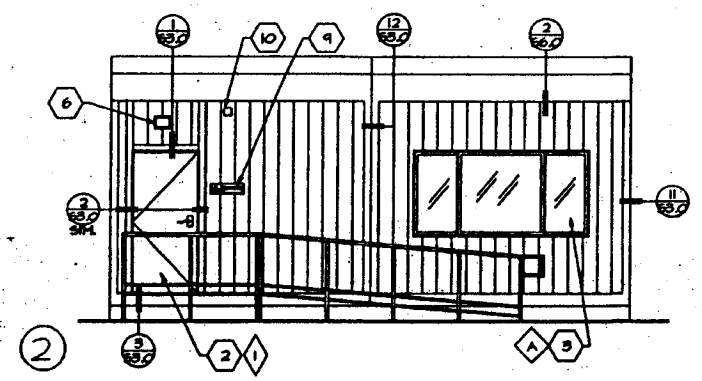

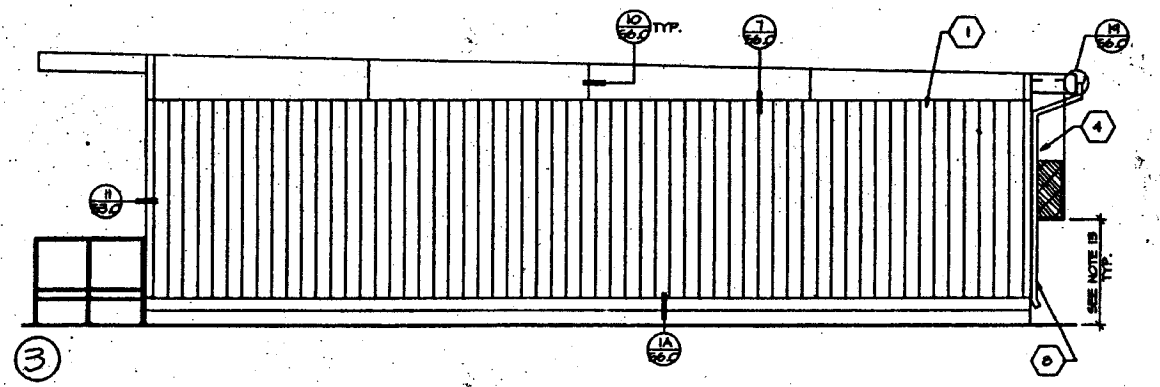

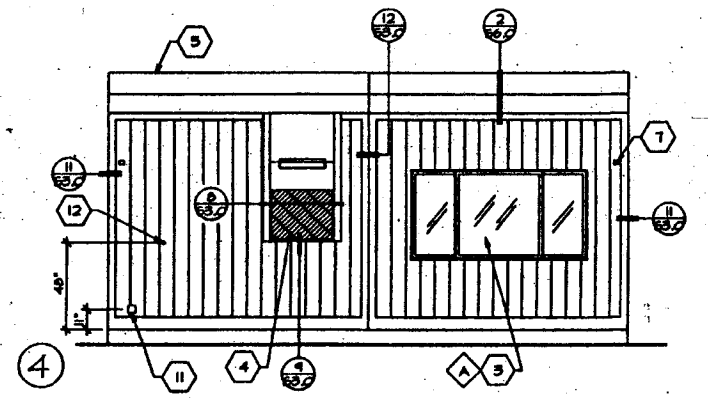

EXTERIOR ELEVATIONS (MONO SLOPE) 24x40

SCALE: 1/4" = 1'-0"

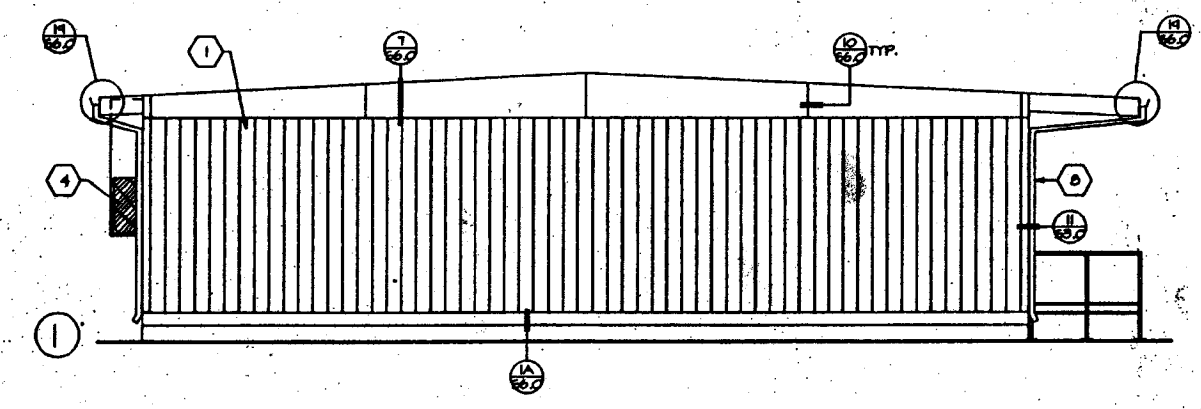

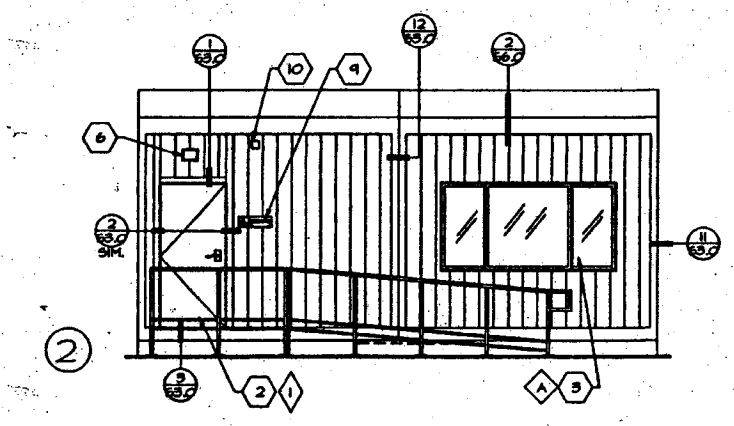

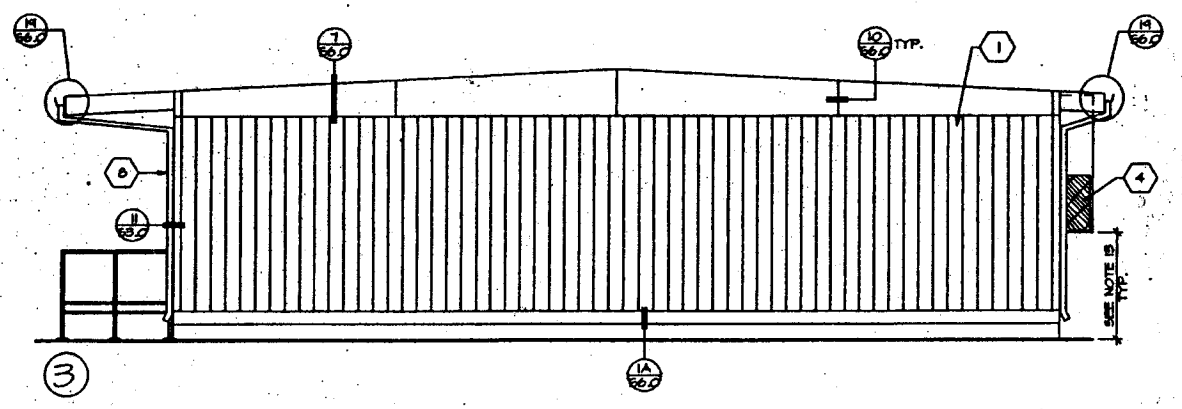

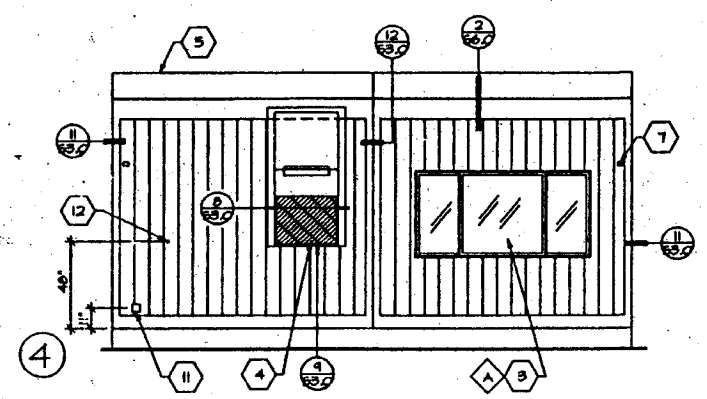

EXTERIOR ELEVATIONS (GABLE) 24x40

SCALE: 1/4" = 1'-0"

NOTE:
RAMPS NEEDED ACCORDINGLY TO SITE CONDITIONS. STANDARD RAMP DESIGN SHOWN FOR REFERENCE ONLY- SEE RAMP SHEETS FOR ALTERNATE RAMP DESIGN.

CBC 1998

PC

KEYNOTES

1 TYPICAL EXTERIOR FINISH- SEE SHEET 4.1

2 EXTERIOR DOOR- SEE SHEET 4.1

3 ALUMINUM SLIDER WINDOW- SEE SHEET 4.1

4 WALL MOUNTED ELECTRIC HEAT PUMP- SEE SHEET 4.0 OR MECHANICAL PLANS

5 ROOFING- SHEET 4.1

6 EXTERIOR LIGHT MOUNTED ABOVE DOOR- SEE SHEET E1.0

7 METAL TAG ON ALL MODULES MECHANICALLY ATTACHED TO EXTERIOR OF REAR FRAME, @ 6'-0" A.F.F. SHOWING DSA APP. #, MANUFACTURERS NAME AND UNIT SERIAL NUMBER.

8 26 ga. DOWNSPOUT.

9 ACCESS SIGN (SEE DETAIL 14 SHEET 53.0) (NOT BY PORTABLE MANUFACTURER)

10 FIRE ALARM HORN OR BELL LOCATED @ 6'-6" ON THE EXTERIOR. CONDUIT TO BE STUBBED INTO ATTIC SPACE ONLY.

11 JUNCTION BOX FOR FIRE ALARM- SEE SHEET E1.0

12 ELECTRICAL POINT OF CONNECTION

15 IF HVAC UNIT IS LOCATED IN ANY PATH OF TRAVEL, PROVIDE PROTECTION FROM OVERHEAD HAZARD IF DIMENSION IS GREATER THAN 27" A.F.S.

D.S.A.

IDENTIFICATION STAMP
DIV. OF THE STATE ARCHITECT
OFFICE OF REGULATION SERVICES
04 - 101055
DATE DEC 29 1999

D.S.A.

PORTION 1
IDENTIFICATION STAMP
DIV. OF THE STATE ARCHITECT
DATE DEC 14 2000

STRUCT. ENGINEER

REGISTERED PROFESSIONAL ENGINEER
JAMES T. BRADSHAW
No. 3882
Civil
Structural
STATE OF CALIFORNIA

LICENSE EXPIRES 6-30-2000

ARCHITECT

CHANGE ORDER

CHECKED BY

AURORA MODULAR INDUSTRIES
18833 Krameria Ave., Riverside, CA. 92504
Phone (909) 788-7184
Fax (909) 788-2283

EXTERIOR ELEVATIONS (24x40)

BY DATE

SHEET A2.0