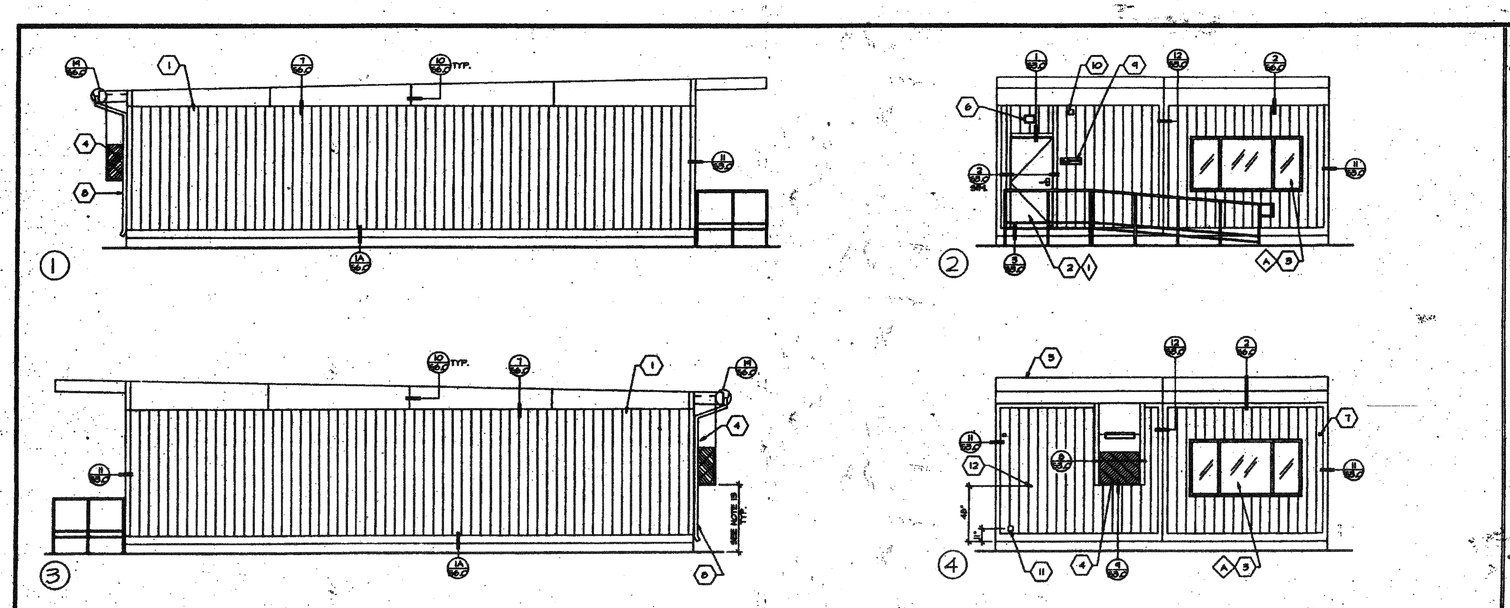

EXTERIOR ELEVATIONS (MONO SLOPE) 24x40
SCALE: 1/4" = 1'-0"

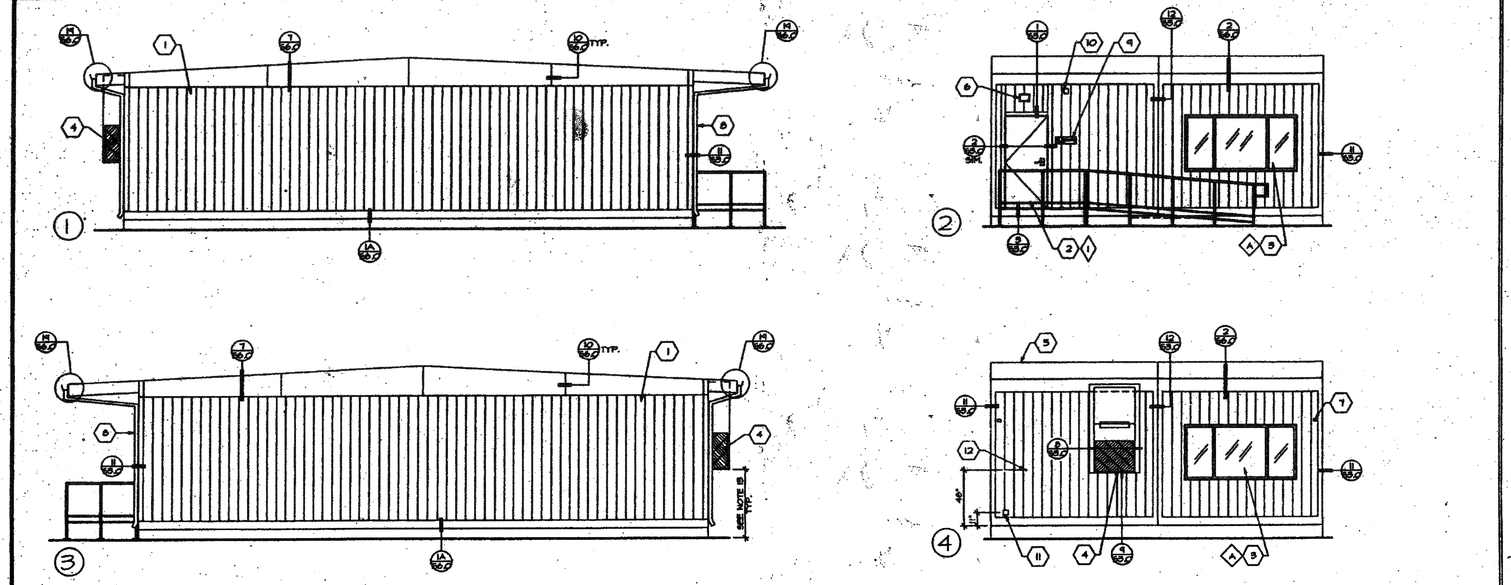

EXTERIOR ELEVATIONS (GABLE) 24x40
SCALE: 1/4" = 1'-0"

CBC 1998

PC

KEYNOTES

1 TYPICAL EXTERIOR FINISH- SEE SHEET 4.1
2 EXTERIOR DOOR- SEE SHEET 4.1
3 ALUMINUM SLIDER WINDOW- SEE SHEET 4.1
4 WALL MOUNTED ELECTRIC HEAT PUMP- SEE SHEET 4.0 OR MECHANICAL PLANS
5 ROOFING- SHEET 4.1
6 EXTERIOR LIGHT MOUNTED ABOVE DOOR- SEE SHEET E1.0
7 METAL TAG ON ALL MODULES MECHANICALLY ATTACHED TO EXTERIOR OF REAR FRAME, @ 8'-0" A.F.F. SHOWING DSA APP. #, MANUFACTURERS NAME AND UNIT SERIAL NUMBER.
8 26 ga. DOWNSPOUT.
9 ACCESS SIGN (SEE DETAIL 14 SHEET S3.0) (NOT BY PORTABLE MANUFACTURER)
10 FIRE ALARM HORN OR BELL LOCATED @ 8'-6" ON THE EXTERIOR. CONDUIT TO BE STUBBED INTO ATTIC SPACE ONLY.
11 JUNCTION BOX FOR FIRE ALARM- SEE SHEET E1.0
12 ELECTRICAL POINT OF CONNECTION
13 IF HVAC UNIT IS LOCATED IN ANY PATH OF TRAVEL, PROVIDE PROTECTION FROM OVERHEAD HAZARD IF DIMENSION IS GREATER THAN 27" A.F.S.

NOTE:
RAMPS NEEDED ACCORDINGLY TO SITE CONDITIONS. STANDARD RAMP DESIGN SHOWN FOR REFERENCE ONLY- SEE RAMP SHEETS FOR ALTERNATE RAMP DESIGN.

IDENTIFICATION STAMP
DIV. OF THE STATE ARCHITECT
APP03 116978
AC FLS SS
Date MAY 03 2016

D.S.A.
IDENTIFICATION STAMP
DIV. OF THE STATE ARCHITECT
OFFICE OF REGULATION SERVICES
04 - 101055
AC
DATE

D.S.A.
PORTION 1
IDENTIFICATION STAMP
DIV. OF THE STATE ARCHITECT
APP03 116978
DEC 1 2006

STRUCT. ENGINEER
LICENSE EXPIRES 6-30-2000

ARCHITECT

CHANGE ORDER

CHECKED BY

TURORA MODULAR INDUSTRIES
18833 Kenmore Ave., Riverside, CA 92504
Phone (909) 786-7196
Fax (909) 786-0283

EXTERIOR ELEVATIONS (24x40)

SHEET
A2.0