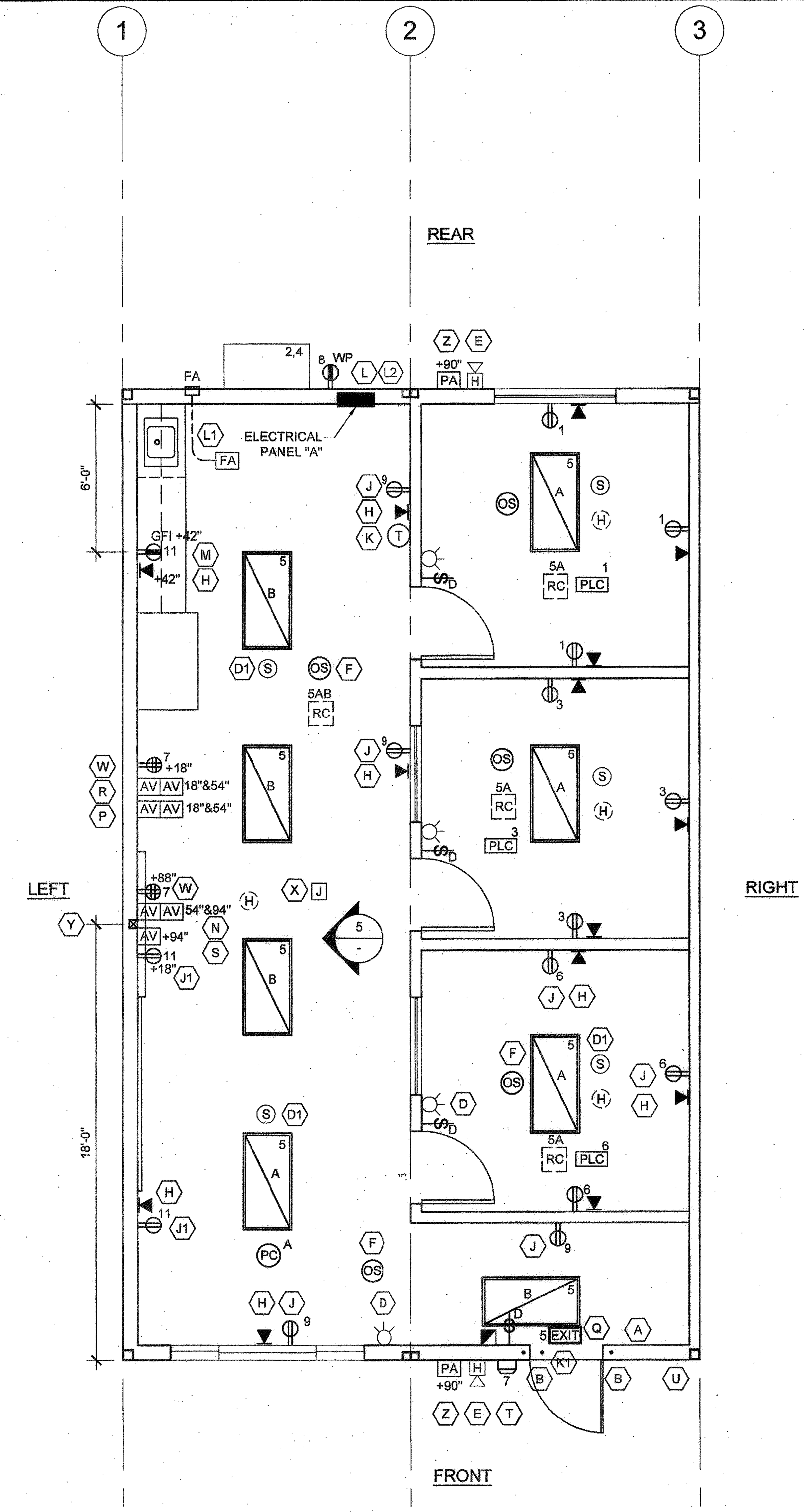

ELECTRICAL PLAN

SCALE: 1/4" = 1'-0" 3

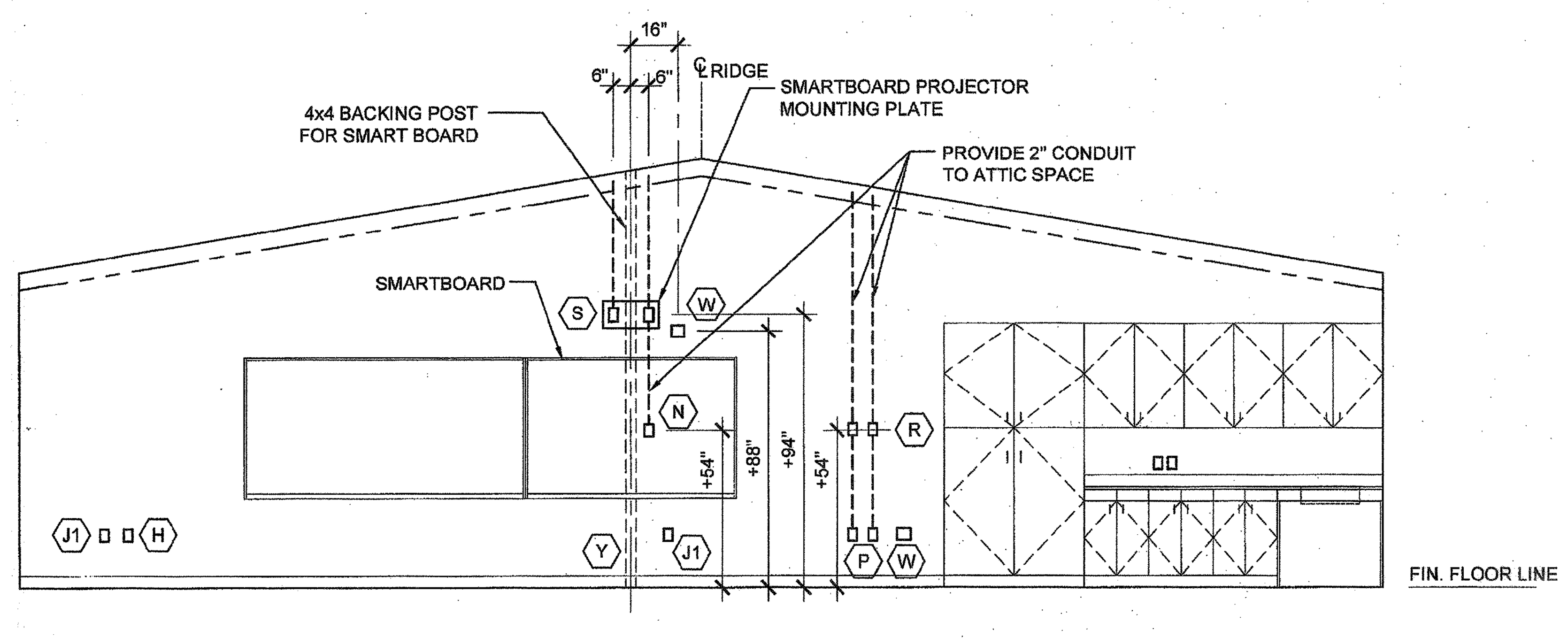

SMART BOARD WALL ELEVATION

SCALE: 1/4" = 1'-0" 5

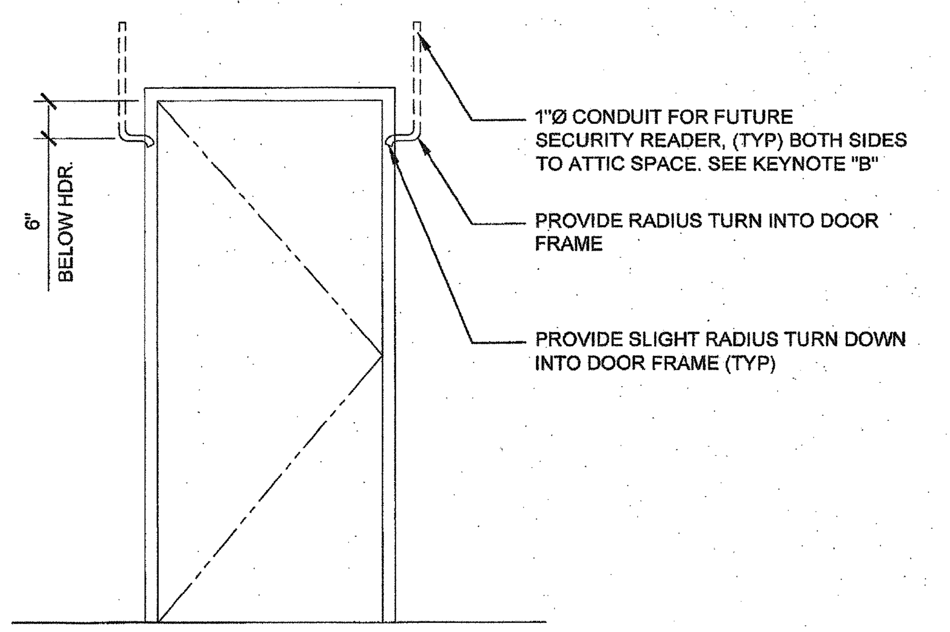

DOOR CONDUIT DETAIL

SCALE: 1/2" = 1'-0" 6

PANEL: A S/N:				PHASE: SINGLE		VOLTS: 120/208		BUSS: 200 AMP			MAIN: 200 AMP				LOCATION: INTERIOR			FEED: REAR			MOUNTING: RECESSED
OBJECT DESCRIPTION	WATT PER	NO. OF	LCL	WATTS A	WATTS B	BRK	POLE	WIRE SIZE	CKT NO	LEG A	LEG B	CKT NO	WIRE SIZE	POLE	BRK	WATTS A	WATTS B	LCL	NO OF	WATT PER	OBJECT DESCRIPTION
RECEPTS	180	3		540		20	1	#12	1	X		2	#6	2	60	6032			1	6032	4 TON HP
RECEPTS	180	3			540	20	1	#12	3		X	4	#6	/	/		6032		1	6032	4 TON HP
INT. LIGHTS	56	8	x	448		20	1	#12	5	X		6	#12	1	20	540			3	180	RECEPTS
QUAD RECEPTS	360	2			720	20	1	#12	7		X	8	#12	1	20		180		1	180	EXT RECEPT
RECEPTS	180	4		720		20	1	#12	9	X		10	#12	1	20	150			1	150	FIRE ALARM
RECEPTS	180	3			540	20	1	#12	11		X	12	#12	1	20		30	x	1	30	EXT. LIGHT
				0					13	X		14				0					
					0				15		X	16					0				
				0					17	X		18				0					
					0				19		X	20					0				
	LEG TOTALS			1708	1800											6722	6242	LEG TOTALS			
LCL=119.5+16472=16591.5																					
TOTAL WATTS=16591.5							LEG BALANCE = 2.4%										TOTAL AMPS: 79.77				

ELECTRICAL PANEL

4

⬡ KEYNOTE REFERENCE

Refer to floor plan(s) indicating the locations of following items.

A – Recessed cabinet Fire Extinguisher – Install at +48" from floor.
B – Provide 1" conduit to from attic to 6" below header. Sweep through king stud and trimmer into void area of door jamb for future door lock controls. Provide slight turn down once into jamb area.
~~C – Provide surge protected duplex outlet for future IDF cabinet. Locate as indicated on floor plan. Provide circuit in electrical panel as indicated on plan.~~
D – J-Box only (Horn/Strobe) – Install 4" sq. J-box (4" sq. x 2-1/8" deep) at +80" from floor. ¾" conduit stubbed above Ceiling. Box shall be mounted flush with interior wall finish.
D1 – J-box only (Smoke detector) – Install 4S box with 3/0 plaster ring flush with t-bar ceiling / hard lid surface. (Install per DSA approved PC plans)
E – J-Box only (Exterior fire horn/speaker) – Install 4" sq. J-box (4" sq. x 2-1/8" deep) at +90" from floor. ¾" conduit stubbed above Ceiling. Box shall be mounted flush with exterior wall finish.
F – Ceiling mounted occupancy sensor. ~~Acuity brand, model #CMR9 PDT.~~
~~G – Install p.v.c. drain at sink area with p.v.c. vent pipe up in wall. Daylight vent through roof and drain through wall just above bottom plate. Do not install water supply line.~~
H – J-box only (Data outlet) – ¾" conduit stubbed above Ceiling.
J – Standard duplex outlet location. Provide circuits in electrical panel as indicated on plan. These locations indicated on the plans are the only locations where outlets are required. Please do not deviate.
J1 - Standard surge protected duplex outlet location. Provide circuits in electrical panel as indicated on plan. These locations indicated on the plans are the only locations where outlets are required. Please do not deviate.
~~J2 – J-Box only (future power). Provide conduit raceway to electrical panel. No wires or outlet at this time.~~
K – J-Box only (T-Stat). BCSD will provide T-stat. Please note that the control wire for the HVAC unit will need to be factory installed from the unit to the j-box for future inclusion of standard District t-stats.
K1 – Provide time delayed HVAC shut down door switch. Intent is to shut down HVAC unit if door is left open too long.
L – Power and ground entrances to the relos need to be accomplished by adding a conduit nipple for the ground and power wires at the rear of the panels through the wall and finish.
L1 – 4S box with 1" conduit into attic space to 4S deep box for fire alarm cable.
L2 – Provide ¾" conduit from electrical panel to attic for future grounding purposes.
M - G.F.I. receptacle. Mount as indicated on plan at cabinet location. Mount at standard height in classroom areas. Provide circuit in electrical panel as indicated on plan.
N - Single gang deep mud ring. Locate at +94" above finish floor. Single gang deep mud ring. Locate at +54" above finish floor. Provide 2" conduit anchored to framing between mud rings and 2" conduit from top mud ring to above ceiling. No hard connections at mud rings. Provide pull string.
P - Double gang deep mud ring. Locate at +54" above finish floor. Single gang deep mud ring. Locate at standard mounting height. Provide 2" conduit anchored to framing between mud rings and 2" conduit from top mud ring to above ceiling. No hard connections at mud rings. Provide pull string.
Q – Install electric lighted exit sign with battery backup.
R – Single gang deep mud ring. Locate at +54" above finish floor. Single gang deep mud ring. Locate at standard mounting height. Provide 2" conduit anchored to framing between mud rings and 2" conduit from top mud ring to above ceiling. No hard connections at mud rings. Provide pull string.
S – Single gang deep mud ring at +94" above finish floor. Provide 2" conduit anchored to framing from mud ring to above ceiling. No hard connection at mud ring. Provide pull string.
T – Exterior light fixture with built in photo cell. RAB Lighting Slim 18 with photocell.
U - Provide and install Trimco #1254 wall mounted stop/door holder at +78".
V - Provide additional rectangular opening ay transverse roof beams for future data conduits.
W - Wall mounted surge protected quadplex outlet. Locate at +88" above finish floor and 16" from center of smart board. Provide circuit in electrical panel as indicated on plan.
X - Provide single gang box with ceiling mounting bracket at center of room in T-bar ceiling.
Y - Provide 4x4 backing post at center of room for smart board bracket.
Z - J-box only (Exterior PA system speaker) Install at +90" from floor.

KEYNOTES

1

NOTE:
1. SEE SHEET E-1.01 FOR ADDITIONAL NOTES AND LEGENDS NOT SHOWN HERE.
2. PROVIDE STAINLESS STEEL COVER PLATES FOR RECEPTACLES AND DATA OUTLETS.

2x4 CEILING RECESSED LIGHT, LED LIGHT FIXTURE WITH DIMMING, ORACLE OT-LED SERIES MODEL # OT-LED-6000L-DIM10-MVOLT-40K-85-A12 WATTAGE: 56 WATTS

WALLPACK LIGHT FIXTURE 'RAB LIGHTING' SLIM 18 W/ PHOTOCELL

QUADPLEX (WALL MOUNTED) RECEPTACLE 15A - 125V - 3 WIRE. MOUNT AT +18" AFF U.O.N. TO CENTERLINE OF DEVICE

4S J-BOX (DATA OUTLET) W/ 3/4" CONDUIT STUBBED ABOVE CEILING

PLC — WATTSTOPPER #LMPL-101 PLUG LOAD CONTROLLER INSTALLED ABOVE CEILING. 1/2 OF DUPLEX RECEPTACLE WITHIN ROOM CONTROLLED BY ROOM OCCUPANCY SENSOR. OCCURS AT OFFICE AREA ONLY,

FA — 4S BOX WITH 1" CONDUIT INTO ATTIC SPACE TO 4S DEEP BOX FOR FIRE ALARM CABLE

AV — DOUBLE OR SINGLE GANG DEEP MUD RING. HEIGHT PER PLAN. PROVIDE 2" CONDUIT ANCHORED TO FRAMING BETWEEN MUD RINGS AND 2" CONDUIT FROM TOP MUD RING TO ABOVE CEILING. NO HARD CONNECTIONS AT MUD RINGS. PROVIDE PULL STRING.

PA — 4S J-BOX W/ 3/4" CONDUIT TO ATTIC (EXTERIOR PA SYSTEM SPEAKER) INSTALL AT +90" A.F.F.

ELECTRICAL LEGEND

2

THESE DRAWINGS AND ALL MATERIAL CONTAINED HEREIN ARE THE PROPERTY OF SILVERCREEK INDUSTRIES, INC (SCI Inc) AND SHALL NOT BE REPRODUCED, COPIED OR OTHERWISE DISPOSED OF DIRECTLY OR INDIRECTLY AND SHALL NOT BE USED IN WHOLE OR IN PART TO ASSIST IN THE MAKING OF OR FOR THE PURPOSE OF FURNISHING ANY INFORMATION FOR THE MAKING OF DRAWINGS, PRINTS, APPARATUS OR PARTS THEREOF WITHOUT THE FULL KNOWLEDGE AND WRITTEN CONSENT OF SCI Inc.
ALL PATENTABLE MATERIAL CONTAINED HEREIN AND ORIGINATING WITH SCI Inc SHALL BE THE PROPERTY OF SCI Inc

SILVER CREEK INDUSTRIES, INC.
"BUILDING FOR THE NEXT GENERATION"
SILVER CREEK
2830 BARRETT AVE. PERRIS, CALIFORNIA 92571
PHONE: 951-943-5393 FAX: 951-943-2211

PROJECT NAME:

24x40 STOCKPILE OFFICE BUILDING

SHEET TITLE:

PROJECT SPECIFIC ELECTRICAL PLAN

LICENSED ARCHITECT JACK F. SHAVELY No. C-33467 REN: 01-31-2019 STATE OF CALIFORNIA

ARCHITECT OF RECORD SUBMISSION DATE

FILE #: 15-6
IDENTIFICATION STAMP DIV. OF THE STATE ARCHITECT OFFICE OF REGULATION SERVICES
03-118270
AC NOV 1 2017 FLS SS
DATE
TRACKING #: 63221-290

PROJECT SPECIFIC STATE AGENCY APPROVAL

IDENTIFICATION STAMP DIV. OF THE STATE ARCHITECT
04 116284
ACS FLS SS RAF
DATE MAY 18 2017

ORIGINAL PC STATE AGENCY APPROVAL

REVISIONS

1
2
3
4
5
6
7
8

SILVER CREEK INDUSTRIES

PROJECT NO:	10914
DRAWN BY:	
SCALE:	AS NOTED
DATE:	04-20-17

SHEET NUMBER

E-1.01N