FREMONT ELEMENTARY
PARKING LOT AND OFFICE PORTABLE
BAKERSFIELD CITY SCHOOL DISTRICT
607 TEXAS ST
BAKERSFIELD, CA.

GENERAL NOTES

1. ALL WORK SHALL CONFORM TO 2016 EDITION TITLE 24, CALIFORNIA CODE OF REGULATIONS
2. CHANGES MADE TO THE APPROVED DRAWINGS AND SPECS SHALL BE MADE BY ADDENDUM OR C.C.D., APPROVED BY DSA AS REQUIRED BY SECTION 4-338, PART 1, TITLE 24, C.C.R.
3. REFER TO RELOCATABLE BUILDING MANUFACTURER'S DRAWINGS FOR ALL INFORMATION REGARDING THE RELOCATABLE BUILDINGS
4. DSA ACCEPTED TESTING LABORATORY TO BE DIRECTLY EMPLOYED BY THE DISTRICT (OWNER) SHALL CONDUCT ALL REQUIRED TESTS AND INSPECTIONS FOR THE PROJECT
5. THE INTENT OF THESE DRAWINGS IS THAT THE WORK OF THE ALTERATION, REHABILITATION OR RECONSTRUCTION IS TO BE IN ACCORDANCE WITH TITLE 24, CCR. SHOULD ANY EXISTING CONDITIONS SUCH AS DETERIORATION OR NON-COMPLYING CONSTRUCTION BE DISCOVERED WHICH IS NOT COVERED BY THE CONTRACT DOCUMENTS WHEREIN THE FINISHED WORK WILL NOT COMPLY WITH TITLE 24, CCR, A CONSTRUCTION CHANGE DOCUMENT (CCD), OR A SEPARATE SET OF PLANS, DETAILING AND SPECIFYING THE REQUIRED WORK SHALL BE SUBMITTED TO AND APPROVED BY DSA BEFORE PROCEEDING WITH THE WORK.
6. GRADING PLANS, DRAINAGE IMPROVEMENTS, RODA AND ACCES REQUIREMENTS AND ENVIRONMENTAL HEALTH CONSIDERATIONS SHALL COMPLY WITH ALL LOCAL ORDINANCES
7. THE FOLLOWING DOCUMENTS SHALL BE ON THE JOBSITE PRIOR TO INSTALLATION OF UNITS:
   A. IN-PLAN VERIFIED REPORT
   B. LABORATORY VERIFIED REPORT
   C. WELDING VERIFIED REPORT
   THE SITE INSPECTOR SHALL VERIFY THE ABOVE DOCUMENTS AND SERIAL NUMBERS ARE APPLICABLE TO EACH UNIT PRIOR TO INSTALLATION OF THE UNITS.
   NOTIFY ARCHITECT AND DIVISION OF THE STATE ARCHITECT FIELD ENGINEER IF ANY DISCREPANCIES OCCUR
8. IN-PLANT INSPECTOR AND MANUFACTURER SHALL FOLLOW THE REQUIREMENTS OF DSA IR16-1.13 AND INCLUDE THE FOLLOWING INFORMATION ON ID TAG OF SHOP FABRICATED RELOCATABLE STRUCTURES:
   1. THE DSA APPLICATION NUMBER AND CBC EDITION UNDER WHICH THE BUILDING CONSTRUCTION WAS AUTHORIZED
   2. THE MANUFACTURER OR BUILDINGS NAME
   3. THE SERIAL NUMBER
   4. THE DESIGN CLIMATE ZONE
   5. THE DESIGN LIVE LOADS FOR THE ROOF AND FLOOR
   6. THE DESIGN WIND SPEED AND EXPOSURE CATEGORY
   7. THE SEISMIC DESIGN Ss

Relocatable Ramp Block Note

The design professional has exempted this ramp from special inspection requirements for material identification and structural welding. Ramp shall not be modified or have shims added causing the distance between the highest ramp walking surface and the adjacent grade to be more than 30 inches. If this condition is not met, structural testing and/or inspection will be required to verify materials and structural welding. This applies to scopes of work including new construction, alteration, or relocation of the ramp.

INSPECTOR OF RECORD

THIS PROJECT REQUIRES A CLASS 3 INSPECTOR. THE INSPECTOR OF RECORD SHALL BE DSA APPROVED AND CONFORM TO THE CLASSIFICATION CRITERIA AS PROVIDED IN INTERPRETATION OF REGULATIONS (IR) A-7, DATED JULY 17, 2013

THE INSPECTOR SHALL BE EMPLOYED BY THE DISTRICT AND APPROVED BY THE RESPONSIBLE ARCHITECT.

BUILDING DATA

CLASSROOM BUILDINGS

OCCUPANCY = E

TYPE OF CONSTRUCTION = VB (NON-SPRINKLERED)

1 (N) OFFICE	@ 960 S.F. EA.	=	960 S.F.
9 (E) CLASSROOMS	@ 960 S.F. EA.	=	8,640 S.F.
TOTAL SQUARE FOOTAGE			9,600 S.F.

PER TABLE 506.2 ALLOWABLE AREA = 9,500 S.F.

PER 506.3.3 AMOUNT OF INCREASE

I =[F/P - 0.25]W/30

I = [620/620]20/30

I = [1 - 0.25] .667

I = [.75] .667

I = .50

9600 * .5 = 4800

9600 + 4800 = 14400

PER 2016 C.B.C. TABLE 506.2 AND AMOUNT OF INCREASE PER 506.3.3:

ALLOWABLE AREA = 14,400 S.F.

9,600 S.F. < 14,400 S.F. = OK

APPLICABLE CODES:

COMPLY WITH PART 1, TITLE 24, 2016 CCR.

A COPY OF TITLE 24 SHALL BE ON SITE AT ALL TIMES. CONSTRUCTION SHALL COMPLY WITH TITLE 24 CALIFORNIA CODE OF REGULATIONS. INCLUDING THE FOLLOWING:

TITLE 24, CCR, PART 2, 2016 CBC

TITLE 24, CCR, PART 3, 2016 CEC

TITLE 24, CCR, PART 4, 2016 CMC

TITLE 24, CCR, PART 5, 2016 CPC

TITLE 24, CCR, PART 6, 2016 CEC

TITLE 24, CCR, PART 9, 2016 CFC

TITLE 19, CCR.

NFPA 72, 2016 EDITION
(AS PER CA AMENDMENTS)

VICINITY MAP

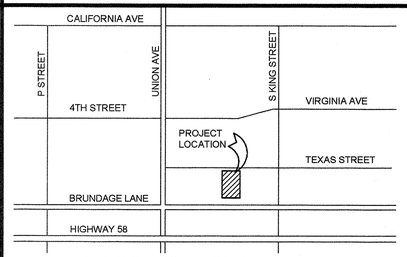

PARKING LOT AND OFFICE PORTABLE
607 TEXAS ST
BAKERSFIELD, CA

BAKERSFIELD CITY SCHOOL DISTRICT

SCOPE OF WORK

- INSTALL ONE PORTABLE BUILDING FROM MFR. PC TO BE USED AS AN OFFICE TO INCLUDE RAMPS AND FOUNDATION
- NEW PARKING LOT WITH ACCESSIBLE PARKING AND ALL RELATED SIGNAGE

SEISMIC DATA

WIND DESIGN DATA [2016 CBC 1603A.1.4]

1. ULTIMATE DESIGN WIND SPEED V= 110 MPH
2. RISK CATEGORY II
3. WIND EXPOSURE CAEGORY C
4. INTERNAL PRESSURE COEFFICIENT +/- 0.18
5. ENCLOSURE CLASSIFICATION ENCLOSED

EARTHQUAKE DESIGN DATA [2106 CBC 1603.A.1.5

SITE COORDINATES: 35.34856° N 119.04464° W

1. RISK CATEGORY II
2. SEISMIC IMPORTANCE FACTOR Ie= 1.0
3. MAPPED SPECTRAL RESPONSE ACCELERATION PARAMETERS
   S_S = 1.092g S_1 = 0.406g
4. SITE CLASS D
5. DESIGN SPECTRAL RESPONSE ACCELERATION PARAMETERS
   S_{DS} = 0.774g S_{D1} = 0.432g

GEOTECHNICAL INFORMATION [2106 CBC 1603.1.6

1. ALLOWABLE SOIL BEARING PRESSURE = 1000 PSF

ARCHITECT'S STATEMENT

ARCHITECT'S STATEMENT FOR PLANS PREPARED BY OTHER LICENSED DESIGN PROFESSIONALS AND/OR CONSULTANTS

THESE DRAWINGS AND/OR SPECIFICATIONS AND/OR CALCULATIONS FOR THE ITEMS LISTED IN THE SHEET INDEX AND CHECKED BELOW HAVE BEEN PREPARED BY OTHER DESIGN PROFESSIONALS OR CONSULTANTS WHO ARE LICENSED AND/OR AUTHORIZED TO PREPARE SUCH DOCUMENTS IN THIS STATE. THESE DOCUMENTS HAVE BEEN EXAMINED BY ME FOR DESIGN INTENT AND HAVE BEEN FOUND TO MEET THE APPROPRIATE REQUIREMENTS OF TITLE 24, CALIFORNIA CODE OF REGULATIONS AND THE PROJECT SPECIFICATIONS PREPARED BY ME.

THE ITEMS CHECKED BELOW ARE ACCEPTABLE FOR INCORPORATION INTO THE CONSTRUCTION OF THIS PROJECT FOR WHICH I AM THE INDIVIDUAL DESIGNATED TO BE IN GENERAL RESPONSIBLE CHARGE (OR FOR WHICH I HAVE DELEGATED RESPONSIBILITY FOR THIS PORTION OF THE WORK.)

SEE THE SHEET INDEX ON THIS SHEET FOR DRAWINGS OTHER THAN ARCHITECTURAL.

APPLICABLE:

☐ ~~STRUCTURAL~~ ☐ ~~PLUMBING~~ ☐ ~~MECHANICAL~~ ☒ ELECTRICAL
☒ PORTABLE MANUFACTURER ☐ ~~CIVIL~~

SIGNATURE OF THE ARCHITECT/ENGINEER — DATE 11/7/17
NAME, TITLE, AFFILIATION
PROJECT ARCHITECT , ARCHITECT, INTEGRATED DESIGNS BY SOMAM, INC.

C-28966 — LICENSED NUMBER
05.31.2019 — EXPIRATION DATE

SYMBOLS

SECTION KEY
A / A3.03 — SECTION IDENTIFICATION; SHEET NUMBER

DETAIL KEY
1 / A2.01 — DETAIL NUMBER; SHEET NUMBER

INTERIOR ELEVATION KEY
A, B, C, D / 1 / A5.01 — ELEVATION DIRECTION; ELEVATION IDENTIFICATION; SHEET NUMBER

ELEVATION DATUM
+1'-0" — INDICATES HEIGHT IN RELATION TO 0'-0"

ROOM NUMBER / FINISH TAG
OFFICE / 100 / A — ROOM NAME; ROOM NUMBER

WINDOW SCHEDULE KEY

KEYNOTE SCHEDULE KEY
1

DOOR SCHEDULE KEY
201

SHEET INDEX

SHT. NO.	DESCRIPTION
	GENERAL
T1.01	COVER SHEET
	CIVIL
1	COVER SHEET
2	NOTES AND SPECIFICATIONS
3	NOTES AND SPECIFICATIONS
4	DETAILS AND TYPICAL SECTIONS
5	EXISTING CONDITIONS AND DEMOLITION
6	GRADING AND SITE IMPROVEMENT PLAN
	ARCHITECTURAL
A1.01	OVERALL SITE PLAN
A1.02	ENLARGED SITE PLAN
A1.03	DETAILS
A1.04	DETAILS
	ELECTRICAL
E-1	SITE PLAN - ELECTRICAL
E-2	POWER AND SIGNAL PLAN
E-3	FIRE ALARM PLAN
E-4	DETAILS AND SYSTEM DIAGRAMS
E-5	SHEET SPECS
	16 SHEETS

PROJECT SPECIFIC # 04-116284 - 24'x40' RELOCATABLE BUILDING BY "SILVER CREEK"

SHT. NO.	SHT. TITLE
	10 SHEETS
A-0N	PROJECT SPECIFIC COVER SHEET
A-02N	PROJECT SPECIFIC SCHEDULES
A-1.01N	PROJECT SPECIFIC FLOOR PLAN - 24x40
A-2.11N	PROJECT SPECIFIC REFLECTED CEILING PLAN - 24x40
A-3.01N	PROJECT SPECIFIC ROOF PLAN 0.030 METAL DECK - DUAL SLOPE
A-3.50N	PROJECT SPECIFIC ROOF DETAIL 0.030 STANDING SEAM ROOF
A-4.01N	PROJECT SPCIFIC EXTERIOR ELEVATIONS
A-6.01N	PROJECT SPECIFIC INTERIOR ELEVATIONS
M-1.01N	PROJECT SPECIFIC MECHANICAL PLAN
E-1.01N	PROJECT SPECIFIC ELECTRICAL PLAN

STOCKPILE # 04-116284 - 24'x40' RELOCATABLE BUILDING BY "SILVER CREEK"

	48 SHEETS
A-0	COVER SHEET
A-0A	T & I FORMS
A-0.0	BUILDING OPTION SCHEDULE
A-0.1	SYMBOLS LEGEND, ABBREVIATIONS AND ADA SIGNAGE
A-0.2	SCHEDULES
A-0.3	TYPICAL KEY PLANS - 24' TO 120' x 40'
A-0.5B	ENERGY CALC'S - PRF FORMS - ZONE 16 WORST CASE
A-0.5C	ENERGY CALC'S - PRF FORMS - ZONE 16 WORST CASE
A-0.6A	ENERGY CALC'S - ELC FORMS - 24' x 40' BUILDINGS
A-0.6B	ENERGY CALC'S - LTO/MCH FORMS - 24' x 40' BUILDINGS
A-0.6C	ENERGY CALC'S - LTI FORMS 24' x 40' BUILDINGS
A-0.6D	ENERGY CALC'S - ELC FORMS 120' x 40' BUILDINGS
A-0.6E	ENERGY CALC'S - LTO/MCH FORMS - 120' x 40' BUILDINGS
A-0.6F	ENERGY CALC'S - LTI FORMS 120' x 40' BUILDINGS
A-0.7	DESIGN ENERGY VALUES BY ZONE AND CALGREEN SPECIFICATIONS
A-1.01	FLOOR PLAN - 24' x 40'
A-2.11	REFLECTED CEILING PLAN - 24' x 40' - VAULTED CEILING
A-2.20	CEILING DETAILS - T GRID
A-3.01	ROOF PLAN - 0.018" METAL DECK - DUAL SLOPE 24' x 40'
A-3.50	ROOF DETAILS - 0.018" STANDING SEAM ROOF DECK
A-4.01	EXTERIOR ELEVATIONS - DUAL SLOPE - 24' x 40'
A-5.02	CROSS SECTION - DUAL SLOPE - 0.018", B.U. OR TPO ROOF
A-5.05	CROSS SECTION
A-5.50	ARCHITECTURAL DETAILS - WOOD STUD - WOOD SIDING
A-5.70	ARCHITECTURAL DETAILS - FLOOR
A-5.80	ARCHITECTURAL DETAILS - MISCELLANEOUS/OPTIONS
A-5.81	ARCHITECTURAL DETAILS - MISCELLANEOUS/OPTIONS
A-6.01	INTERIOR ELEVATIONS - 24' x 40'
F-0.03	WOOD FOUNDATION PLAN - 24' x 40' (100 PSF)
F-0.50	FOUNDATION DETAILS - WOOD
S-0.1	STRUCTURAL SPECIFICATIONS
S-1.01	FLOOR FRAMING PLAN - WOOD FLOOR
S-1.50	FLOOR FRAMING DETAILS - WOOD FLOOR
S-2.11	ROOF FRAMING PLAN - 0.018", BUILT UP OR TPO ROOF - 20 PSF
S-2.51	ROOF FRAMING DETAILS - DUAL SLOPE
S-2.60	ROOF FRAMING DETAILS
S-3.02	BUILDING SECTION - DUAL SLOPE
S-5.00	WALL FRAMING ELEVATIONS - WOOD STUDS
S-5.10	WALL FRAMING DETAILS - WOOD STUDS
S-5.11	WALL FRAMING DETAILS - WOOD STUDS
S-5.12	WALL FRAMING OPENING SCHEDULE/WOOD STUDS
P-1.01	PLUMBING DETAILS AND SCHEDULE
M-0.1	MECHANICAL NOTES, SCHEDULES AND DETAILS
M-1.01	MECHANICAL PLAN - WALL MOUNT - 24' x 40'
E-1.01	ELECTRICAL PLAN - 24' x 40'
R-1.01	STANDARD RAMP PLAN
R-2.01	RAMP DETAILS
	67 SHEETS

Ownership of Documents
This document, the ideas and designs incorporated herein, as an instrument of Professional Service is the property of Integrated Designs by SOMAM Inc. and is not to be used, in whole or in part for any other project without written authorization.
© COPYRIGHT 2017

integrated designs by SOMAM, Inc.
ARCHITECTURE · ENGINEERING · INTERIOR DESIGN · CONSTRUCTION MANAGEMENT
6011 N. Fresno, Suite 130 – Fresno, California 93710
Phone (559) 435–0881 Fax (559) 435–0887 E-Mail: design@somam.com
www.integratedddesigns.com

Revision:	Revision Description:	Rev. Date:	Revision:	Revision Description:	Rev. Date:

Sheet Title: COVER SHEET

Project Name & Address: FREMONT ELEMENTARY PARKING LOT AND OFFICE PORTABLE
BAKERSFIELD CITY SCHOOL DISTRICT
607 TEXAS ST BAKERSFIELD, CA.

Issue Date: 07/30/17
Date: 10/10/17
Designer: ---
DR: ---
PC: RJD

Agency Approval Stamp:

FILE #: 15–6
IDENTIFICATION STAMP
DIV. OF THE STATE ARCHITECT
OFFICE OF REGULATION SERVICES
03–118270
AC ME E S CS SS CL
DATE NOV 2 2017
TRACKING #: 63221–290

Stamp(s):

LICENSED ARCHITECT CURTIS E. FLYNN No. C 28966 REG. 5-31-19 STATE OF CALIFORNIA

Job No.: 5269

Sheet No.: T1.01

Release: -

G:\2017\fre\17-5269 Fremont Elementary Office and Parking Lot\Sheets\T1.01 COVER SHEET.dwg RICHARD DELLANINI

GRADING AND SITE IMPROVEMENT PLANS
FOR NEW PARKING LOT
FREMONT ELEMENTARY SCHOOL

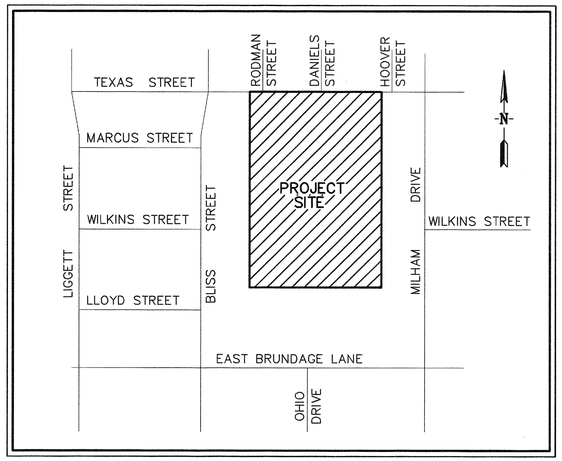

VICINITY MAP
NO SCALE

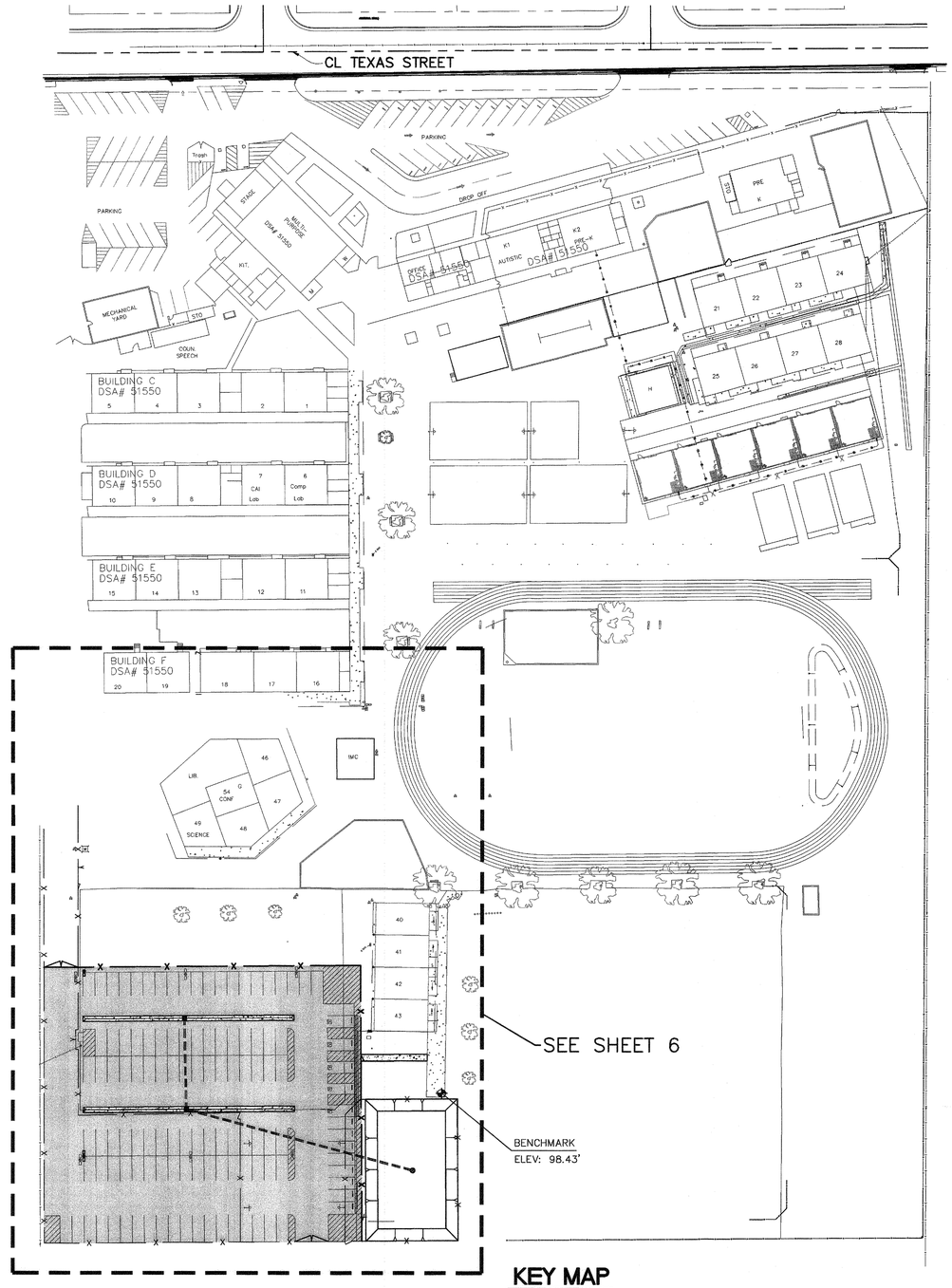

KEY MAP
SCALE: 1" = 50'

SHEET No. INDEX

1. COVER SHEET
2. NOTES AND SPECIFICATIONS
3. NOTES AND SPECIFICATIONS
4. DETAILS AND TYPICAL SECTIONS
5. EXISTING CONDITIONS & DEMOLITION
6. GRADING AND SITE IMPROVEMENT PLAN

STATISTICS:

1. ASSESSOR'S PARCEL NUMBER: 139-440-08 & 139-440-09
2. APPROXIMATE ACREAGE: ~14.5 TOTAL ACRES
3. WATER: ON-SITE
4. SEWER DISPOSAL: ON-SITE
5. DRAINAGE: ON-SITE
6. EXISTING LAND USE: SCHOOL SITE
7. PROPOSED LAND USE: SCHOOL SITE
8. FIRE PROTECTION: C.O.B.
9. ADDRESS: 607 TEXAS STREET
   BAKERSFIELD, CA 93307

BENCHMARK USED:

SET NAIL AT TOP OF CURB AS SHOWN ON THIS PLAN WITH ELEVATION = 98.43' (ASSUMED DATA)

IDENTIFICATION STAMP
DIV. OF THE STATE ARCHITECT
03 118270
AC / FLS / SS
Date NOV - 6 2017

LAV//Pinnacle Engineering
5401 Business Park South, Suite 204, Bakersfield, CA 93309
Phone: (661) 869-0184 Fax: (661) 377-0076

REGISTERED PROFESSIONAL ENGINEER MATTHEW K. VOVILLA RCE 43130 Exp. 3-31-18 CIVIL STATE OF CALIFORNIA

MATTHEW K. VOVILLA RCE 43130 EXP. 3/31/18 6-14-17

REVISIONS	DATE
1 REMOVED TREE WELLS, ADDED TRUNCATED DOMES, & REVISED PARKING LAYOUT.	06/20/17
2 ADJUSTED GRADES FOR REMOVAL OF POR. OF PAVEMENT.	07/21/17
3 REVISIONS PER AS-BUILT LIGHT AND GRATE LOCATIONS.	08/15/17
4 REVISIONS PER DSA COMMENTS	09/21/17

GRADING & SITE IMPROVEMENT PLANS
FOR NEW PARKING LOT
FREMONT ELEMENTARY SCHOOL
607 TEXAS STREET

BCSD BAKERSFIELD CITY SCHOOL DISTRICT

JOB No.:	17-776
DWG NO.:	GRADING
DATE:	06/14/2017
DRAWN BY:	ADA
CHECKED BY:	MKV
SHEET	1 OF 6 SHEETS

GENERAL NOTES:

1. CONTRACTOR SHALL OBTAIN ALL NECESSARY PERMITS BEFORE START OF CONSTRUCTION. A PERMIT SHALL BE OBTAINED FROM CITY PUBLIC WORKS DEPARTMENT FOR WORK TO BE DONE IN THE CITY STREET RIGHT-OF-WAY. CONTRACTOR SHALL PROVIDE ALL INSURANCE, BONDING, AND SECURITY REQUIRED BY THE PERMIT.
2. ANY TRENCHING TO BE CONDUCTED WITHIN THIS PROJECT SHALL BE BACKFILLED AND COMPACTED PER THE SOILS REPORT.
3. THE CONTRACTOR SHALL REMOVE OR RELOCATE ALL OBSTRUCTIONS AS DIRECTED BY CITY ENGINEER.
4. CONTRACTOR AGREES THAT HE SHALL ASSUME SOLE AND COMPLETE RESPONSIBILITY FOR JOB SITE CONDITIONS DURING THE COURSE OF CONSTRUCTION OF THE PROJECT, INCLUDING SAFETY OF PERSONS AND PROPERTY. THIS REQUIREMENT SHALL APPLY CONTINUOUSLY AND NOT BE LIMITED TO NORMAL WORKING HOURS. THE CONTRACTOR SHALL DEFEND, INDEMNIFY AND HOLD THE DISTRICT, THE ENGINEER, AND THE ARCHITECT HARMLESS FROM ANY AND ALL LIABILITY, REAL OR ALLEGED, IN CONNECTION WITH THE PERFORMANCE OF WORK ON THIS PROJECT, EXCEPTING FOR LIABILITY ARISING FROM NEGLIGENCE BY THE DISTRICT, ENGINEER, OR ARCHITECT.
5. IF A PROBLEM SHOULD ARISE DURING THE COURSE OF CONSTRUCTION, IT IS THE RESPONSIBILITY OF THE CONTRACTOR TO NOTIFY THE ENGINEER IMMEDIATELY PRIOR TO ANY FURTHER WORK.
6. ALL CONSTRUCTION SHALL BE IN ACCORDANCE WITH THE BAKERSFIELD CITY SCHOOL DISTRICT STANDARDS, CITY OF BAKERSFIELD STANDARDS, AND STATE OF CALIFORNIA, DEPARTMENT OF TRANSPORTATION STANDARD SPECIFICATIONS, LATEST EDITION, EXCEPT AS OTHERWISE SHOWN ON THESE PLANS OR CONTRACT DOCUMENTS.
7. ALL EXISTING IMPROVEMENTS (CURB, GUTTER, SIDEWALK, CROSS-GUTTER, FENCING, ETC.) THAT ARE REMOVED, DAMAGED, OR UNDERCUT SHALL BE REPAIRED OR REPLACED AS DIRECTED BY THE ENGINEER.
8. THE LOCATIONS OF EXISTING UTILITIES AND UNDERGROUND PIPELINES ARE SHOWN IN AN APPROXIMATE WAY ONLY. THE CONTRACTOR SHALL DETERMINE THE EXACT LOCATION AND DEPTH OF ALL EXISTING UTILITIES AND UNDERGROUND PIPELINES BEFORE COMMENCING WORK. CONTRACTOR AGREES TO BE FULLY RESPONSIBLE FOR ANY AND ALL DAMAGES WHICH MIGHT BE OCCASIONED BY HIS FAILURE TO EXACTLY LOCATE, PRESERVE AND PROTECT ANY AND ALL UNDERGROUND UTILITIES AND PIPELINES. THE CONTRACTOR SHALL CALL U.S.A. (UNDERGROUND SERVICE ALERT) 1-800-227-2600 TWO WORKING DAYS PRIOR TO ANY CONSTRUCTION OR EXCAVATION.
9. IF THE CONTRACTOR IS IN DOUBT AS TO THE MEANING OF ANY PART OF THE PLAN AND SPECIFICATIONS OR FINDS DISCREPANCIES OR OMISSIONS WITH THE DRAWINGS, HE SHALL SUBMIT A WRITTEN REQUEST FOR AN INTERPRETATION OR A CORRECTION THEREOF, PRIOR TO FILING HIS BID PRICE FOR THE PROJECT.
10. IN THE EVENT CONSTRUCTION STAKING BASED ON THE ENGINEER'S PLANS, DRAWINGS OR OTHER DOCUMENTS IS ACCOMPLISHED BY OTHER THAN THE ENGINEER, CLIENT AGREES TO HOLD ENGINEER HARMLESS AND RELEASE CONSULTANT FROM ALL LIABILITY ARISING FROM THE USE OF SAID PLANS, DRAWINGS OR OTHER DOCUMENTS.
11. ALL EXISTING PAVING AND SURFACING REMOVED, DAMAGED OR UNDERCUT WITHIN THE CITY RIGHT-OF-WAY SHALL BE REPLACED IN ACCORDANCE WITH THE CITY OF BAKERSFIELD DRAWINGS S-6, OR AS OTHERWISE NOTED HEREIN.
12. COMPACTION TESTING SHALL BE PROVIDED BY THE DISTRICT. RE-TESTS DUE TO FAILURES SHALL BE AT THE EXPENSE OF THE CONTRACTOR
13. LAV//PINNACLE ENGINEERING SHALL NOT BE RESPONSIBLE OR LIABLE FOR UNAUTHORIZED CHANGES TO, OR USES OF, THESE PLANS. ALL CHANGES TO THESE PLANS MUST BE APPROVED IN WRITING BY LAV//PINNACLE ENGINEERING.
14. THE CONTRACTOR SHALL BE RESPONSIBLE FOR DEWATERING ALL TRENCHES. IF TRENCHES OR PIPING BECOME DAMAGED DUE TO WATER INFILTRATION, IT SHALL BE THE CONTRACTOR'S RESPONSIBILITY TO REPAIR THE TRENCH AND PIPING TO THE SATISFACTION OF THE ENGINEER AT THE CONTRACTORS EXPENSE.
15. FLOODING OR WATER JETTING SHALL NOT BE USED FOR BACKFILL COMPACTION.
16. DRAWINGS SHOWN ON THIS SHEET ARE FOR REFERENCE ONLY. CONTRACTOR SHALL OBTAIN A COPY OF "CITY OF BAKERSFIELD SUBDIVISION STANDARDS" AND DRAWINGS FOR HIS USE. THESE STANDARD DRAWINGS SHALL BE CONSIDERED A PART OF THESE PLANS.
17. NORMAL CONSTRUCTION STAKING WILL BE THE RESPONSIBILITY OF THE CONTRACTOR.

DEMOLITION NOTES:

1. CONTRACTOR SHALL PERFORM ALL NECESSARY DEMOLITION WITHIN THE LIMITS OF WORK.
2. SEE SPECIFIC DEMOLITION NOTES ON PLANS.
3. CONTRACTOR SHALL OBTAIN ALL NECESSARY PERMITS FOR DEMOLITION.
4. ALL NECESSARY DEMOLITION WITHIN THE LIMITS OF WORK SHALL BE PERFORMED BY THE CONTRACTOR. EXISTING IRRIGATION SHALL BE CUT AND CAPPED AT APPROPRIATE LOCATIONS UNTIL THE NEW SYSTEM IS OPERATIONAL. ALL EXISTING IRRIGATION APPURTENANCES WITHIN THE LIMITS OF WORK SHALL BE REMOVED AND PROPERLY DISPOSED.
5. ALL VOIDS OR DEPRESSIONS CREATED BY DEMOLITION SHALL BE BACKFILLED WITH ENGINEERED FILL AND COMPACTED TO 95% RELATIVE DENSITY PER ASTM D1557.
6. EXCEPT AS OTHERWISE NOTED OR SHOWN ON THE PLANS, ALL MATERIAL GENERATED BY THE DEMOLITION SHALL BECOME THE PROPERTY OF THE CONTRACTOR, AND SHALL BE DISPOSED OF IN ACCORDANCE WITH ALL LAWS AND ORDINANCES.
7. THE AREA OF WORK AND CONSTRUCTION TRAFFIC LANES SHALL BE CORDONED OFF FOR THE DURATION OF THE CONTRACT. THE CONTRACTOR SHALL CONTINUALLY PROVIDE FOR SAFE PASSAGE OF PEDESTRIANS AROUND THE WORK ZONE.

SOIL STERILANT:

1. SOIL STERILANT SHALL BE APPLIED TO NATIVE SOILS OR BASE MATERIAL IN AREAS TO RECEIVE PORTLAND CEMENT CONCRETE, ASPHALT CONCRETE, OR BENEATH PROPOSED STRUCTURES.
2. SOIL STERILANT SHALL BE STANDARD, QUICK-ACTING, SHORT-LIVED, AND NON-SELECTIVE WEED AND GRASS KILLER. APPLICATION OF THE STERILANT SHALL POSE NO LONG TERM OR SHORT TERM HEALTH THREATS TO THE INSTALLER OR THE GENERAL PUBLIC. SOIL STERILANT SHALL BE OUSTXP, AS MANUFACTURED BY DUPONT, OR APPROVED EQUAL. SOIL STERILANT SHALL BE APPLIED AT A RATE AND MANNER IN ACCORDANCE WITH THE MANUFACTURER'S RECOMMENDATIONS, EXCEPT AS OTHERWISE MODIFIED HEREIN.
3. SOIL STERILANT SHALL BE APPLIED TO THE GRADED AND COMPACTED BASE MATERIAL IMMEDIATELY BEFORE PAVING.
4. SOIL STERILANT SHALL BE APPLIED TO THE GRADED AND COMPACTED NATIVE SOIL OR BASE MATERIAL UNDER PORTLAND CEMENT CONCRETE, AFTER GRADE IS ACCEPTED, FORMWORK, OR STRINGLINE HAS BEEN INSTALLED, AND "POURING" IS PLANNED WITHIN 24-HOURS. GRADE SHALL NOT BE DISTURBED ONCE STERILANT HAS BEEN APPLIED.
5. SOIL STERILANT SHALL NOT BE APPLIED EARLIER THAN ONE DAY PRIOR TO PLACEMENT OF EITHER AGGREGATE BASE OR POURING PC CONCRETE. WATER SHALL NOT BE APPLIED TO AREA AFTER APPLICATION OF STERILANT.
6. SOIL STERILANT SHALL NOT BE APPLIED WHEN PRECIPITATION IS EMINENT. SOIL STERILANT SHALL BE APPLIED IN ACCORDANCE WITH ALL MANUFACTURER'S DRIFT MANAGEMENT RECOMMENDATIONS.

GRADING NOTES:

1. ALL GRADING AND SITE PREPARATION SHALL CONFORM TO THIS PLAN AND SHALL CONFORM WITH APPENDIX CHAPTER 33 OF CALIFORNIA BUILDING CODE (CURRENT EDITION) AND STANDARDS PERTAINING THERETO.
2. ALL WORK SHALL CONFORM TO AND COMPLY WITH THE REQUIREMENTS OF THE GEOTECHNICAL REPORT. IN THE EVENT OF A CONFLICT BETWEEN THESE PLANS AND THE SOILS REPORT, THE MORE RESTRICTIVE SPECIFICATION SHALL APPLY.
3. ALL DESIGN ELEVATIONS SHOWN ARE TO FINISH GRADE.
4. THE CONTRACTOR SHALL BE RESPONSIBLE FOR GRADING THE PAD AND PAVING AREAS TO WITHIN 0.1 FOOT OF SUBGRADE. IF SUCH AREAS SHOULD BE FOUND TO BE MORE THAN 0.1 FOOT FROM THE DESIGN SUBGRADE ELEVATION AFTER COMPLETION OF GRADING, THE CONTRACTOR SHALL RETURN AND CORRECT THE GRADING AT NO COST TO THE OWNER.
5. COMPACTION TESTING SHALL BE PROVIDED BY THE DISTRICT. RE-TESTS DUE TO FAILURES SHALL BE AT THE EXPENSE OF THE CONTRACTOR.
6. IF A PROBLEM OR CONFLICT SHOULD ARISE DURING THE COURSE OF THIS PROJECT, IT IS THE RESPONSIBILITY OF THE OWNER OR THE GRADING CONTRACTOR TO NOTIFY THE ENGINEER IMMEDIATELY PRIOR TO ANY FURTHER WORK.
7. ALL GRADING WORK SHALL BE SUPERVISED AS "ENGINEERED GRADING" IN ACCORDANCE WITH APPENDIX CHAPTER 33 OF CALIFORNIA BUILDING CODE. THE DESIGN ENGINEER SHALL EXERCISE SUFFICIENT SUPERVISORY CONTROL DURING GRADING AND CONSTRUCTION TO ENSURE COMPLIANCE WITH THE PLANS, SPECIFICATIONS AND CODE WITHIN HIS PURVIEW.
8. DUST CONTROL: IT SHALL BE THE CONTRACTOR'S RESPONSIBILITY TO PREVENT A DUST NUISANCE FROM ORIGINATING FROM THE SITE OF WORK AS A RESULT OF HIS OPERATIONS DURING THE EFFECTIVE PERIOD OF THIS CONTRACT. PREVENTATIVE MEASURES TO BE TAKEN BY THE CONTRACTOR SHALL INCLUDE, BUT NOT BE LIMITED TO THE FOLLOWING:

   A. WATER SHALL BE APPLIED TO ALL UNPAVED AREAS AS REQUIRED TO PREVENT THE SURFACES FROM BECOMING DRY ENOUGH TO PERMIT DUST FORMATION.

   B. PAVED SURFACES OVER WHICH VEHICULAR TRAFFIC IS PERMITTED TO TRAVEL SHALL BE KEPT FREE OF DIRT.
9. THE GEOTECHNICAL ENGINEER SHALL PROVIDE SUFFICIENT INSPECTIONS DURING THE PREPARATION OF THE NATURAL GROUND AND THE PLACEMENT AND COMPACTION OF THE FILL TO BE SATISFIED THAT THE WORK IS BEING PERFORMED IN ACCORDANCE WITH THE PLAN AND APPLICABLE CODE REQUIREMENTS.
10. EXISTING UNDERGROUND LINES HAVE BEEN SHOWN ON THIS PLAN ACCORDING TO AVAILABLE RECORDS. THE ENGINEER IS NOT RESPONSIBLE FOR POSSIBLE ERRORS OR OMISSIONS AND IT SHALL BE THE CONTRACTOR'S RESPONSIBILITY TO VERIFY LOCATION OF ALL UTILITIES PRIOR TO CONSTRUCTION.
11. DURING GRADING, REASONABLE SEARCHING SHOULD BE PERFORMED FOR CONCEALED SUBSURFACE OBSTRUCTIONS. ALL ABANDONED SUBSURFACE OBSTRUCTIONS SHOULD BE REMOVED. IF THE TERMINUS OF ANY ABANDONED PIPING IS OUTSIDE THE PROJECT LIMITS, THE PIPING SHOULD BE REMOVED WITHIN THE PROJECT AND PROPERLY CAPPED AT THE PROJECT BOUNDARY.
12. CONTRACTOR AGREES THAT HE SHALL ASSUME SOLE AND COMPLETE RESPONSIBILITY FOR JOB SITE CONDITIONS DURING THE COURSE OF CONSTRUCTION OF THIS PROJECT; INCLUDING SAFETY OF ALL PERSONS AND PROPERTY; THAT THIS REQUIREMENT SHALL APPLY CONTINUOUSLY AND NOT BE LIMITED TO NORMAL WORKING HOURS; AND THAT THE CONTRACTOR SHALL DEFEND, INDEMNIFY AND HOLD THE OWNER AND THE ENGINEER HARMLESS FROM ANY AND ALL LIABILITY, REAL OR ALLEGED, IN CONNECTION WITH THE PERFORMANCE OF WORK ON THIS PROJECT, EXCEPTING FOR LIABILITY ARISING FROM THE SOLE NEGLIGENCE OF THE OWNER OR THE ENGINEER.
13. CONSTRUCTION STAKING AND LAYOUT FOR ALL COMPONENTS OF WORK SHALL BE PROVIDED ONE-TIME BY THE DISTRICT. THE CONTRACTOR SHALL BE RESPONSIBLE TO PROTECT STAKES. RE-STAKING SHALL BE AT THE CONTRACTOR'S EXPENSE.
14. ALL ONSITE OR OFFSITE OBSTRUCTIONS SHALL BE REMOVED BY THE CONTRACTOR AT CONTRACTOR'S EXPENSE.
15. ANY EXISTING IMPROVEMENT OR UTILITY REMOVED, DAMAGED OR UNDERCUT BY CONTRACTOR'S OPERATIONS SHALL BE REPAIRED OR REPLACED AS DIRECTED BY THE ENGINEER AND APPROVED BY THE DISTRICT AT THE CONTRACTOR'S EXPENSE.
16. ALL CUT AND FILL SLOPES SHALL NOT BE STEEPER THAN 2 HORIZONTAL TO 1 VERTICAL.
17. SITE PREPARATION AND GRADING SHALL BE DONE UNDER THE SUPERVISION OF THE GEOTECHNICAL ENGINEER. THE GEOTECHNICAL ENGINEER AND DESIGN ENGINEER SHALL BE NOTIFIED AT LEAST 48 HOURS PRIOR TO PLACING OF ANY FILL MATERIAL.
18. THE SITE SHALL BE CLEARED AND GRUBBED OF ALL VEGETATION, INCLUDING ROOTS, LOOSE FILL, TRASH AND OTHER DELETERIOUS MATERIALS. ANY HOLE OR VOIDS LEFT AFTER THE REMOVAL OF TREES, ROOTS, SEPTIC TANKS, ABANDONED FOUNDATIONS, PIPELINES OR THE LIKE, SHALL BE FILLED AS REQUIRED BY THE GEOTECHNICAL ENGINEER.
19. FILL MATERIAL SHALL BE SUBJECT TO THE SOILS ENGINEER'S APPROVAL.
20. ALL FILL SLOPES SHALL NOT TOE OUT WITHIN 12 FEET HORIZONTALLY FROM THE TOP OF EXISTING OR PLANNED CUT SLOPES.
21. THE CUT AND FILL QUANTITIES ARE CALCULATED USING A COMPACTION FACTOR OF ___. THE ENGINEER MAKES NO WARRANTEE EITHER DIRECT OR IMPLIED THAT THIS WILL BE THE ACTUAL COMPACTION FACTOR. IF A DEFICIENCY OR AN EXCESS OF SOIL ARISES, THE GRADING CONTRACTOR SHALL IMMEDIATELY CONTACT THE ENGINEER, WHO SHALL DETERMINE IF ADJUSTMENTS CAN BE MADE TO IMPROVE THE BALANCE BETWEEN CUT AND FILL.
22. THE CUT AND FILL QUANTITIES SHOWN ON THIS PLAN ARE FOR PERMIT PURPOSES ONLY. THE CONTRACTOR SHALL, AFTER EXAMINING THE PLAN, SOILS REPORT AND THE SITE TERRAIN, PREPARE HIS BID PRICE FOR THE PROJECT, BASED ON HIS OWN EARTHWORK CALCULATIONS.
23. EXPORT MATERIAL SHALL BECOME THE PROPERTY OF THE CONTRACTOR AND SHALL BE DISPOSED OF AT AN APPROVED SITE.
24. SEE ARCHITECT'S DETAIL SHEET FOR DETAILS NOT SHOWN ON THESE PLANS. ALSO SEE ARCHITECT'S SITE PLAN FOR DIMENSIONS NOT SHOWN ON THIS PLAN.
25. IF THE CONTRACTOR IS IN DOUBT AS TO THE MEANING OF ANY PART OF THE PLAN AND SPECIFICATIONS OR FINDS DISCREPANCIES IN OR OMISSIONS FROM THE DRAWINGS, HE SHALL SUBMIT A WRITTEN REQUEST FOR AN INTERPRETATION OR A CORRECTION THEREOF, PRIOR TO FILING HIS BID PRICE FOR THE PROJECT.
26. THE CONTRACTOR SHALL COORDINATE WITH THE DISTRICT AND THE ENGINEER FOR LOCATION OF THE BORROW AREAS (IF REQUIRED) PRIOR TO BEGINNING CONSTRUCTION.
27. ANY TRENCHING TO BE DONE WITHIN THE PROJECT SHALL BE BACKFILLED AND COMPACTED IN ACCORDANCE WITH THE SOILS REPORT.
28. SURFACE DRAINAGE SHALL BE 1% MINIMUM, EXCEPT AS WAVED BY THE BUILDING OFFICIAL.
29. IT IS THE RESPONSIBILITY OF THE CONTRACTOR TO (A) FAMILIARIZE THEMSELVES WITH THE FOREGOING RECOMMENDATIONS, (B) NOTIFY THE ENGINEER WHEN SITE PREPARATION BEGINS AND BEFORE THE PLACEMENT OF FILLS, AND (C) INFORM THE ENGINEER IF ITEMS WHICH MIGHT EFFECT FOUNDATION STABILITY ARE ENCOUNTERED DURING EARTHWORK OPERATIONS SO THAT THEY MAY BE TREATED UNDER HIS DIRECTION (THESE MIGHT INCLUDE BURIED TRASH OR VEGETATION, PIPELINES, ABANDONED WELLS, OLD FILLS, ETC.)
33. FLOODING, JETTING, OR SIMILAR CONSOLIDATION METHODS OF COMPACTION SHALL NOT BE PERMITTED.
34. ANY ABANDONED WELLS ON THE PROPERTY DISCOVERED DURING GRADING SHALL BE ADEQUATELY CAPPED IN ACCORDANCE WITH ALL APPLICABLE CITY, COUNTY AND STATE ORDINANCES.

GRADING NOTES (CONTINUED):

35. A BERM OR DRAINAGE SWALE SHALL BE CONSTRUCTED ALONG THE TOP OF ALL CUT AND FILL SLOPES TO PREVENT RUNOFF FROM GOING OVER THE SLOPE. THE FACE OF ALL CUT AND FILL SLOPES SHALL BE PLANTED WITH A GROUND COVER INDIGENOUS TO THE AREA.
36. EXCEPT AS OTHERWISE SPECIFIED BY THE SOILS REPORT OR STRUCTURAL SECTION HEREIN, GROUND SURFACES TO RECEIVE CONCRETE AND BITUMINOUS PAVEMENTS SHOULD BE SCARIFIED AND COMPACTED TO A MINIMUM DEPTH OF TWELVE INCHES (12") BELOW THE EXISTING GROUND SURFACE IN AREAS TO BE FILLED. COMPACTION IN PROPOSED PAVEMENT AREAS SHOULD BE TO A MINIMUM OF NINETY-FIVE PERCENT (95%) OF THE MAXIMUM DENSITY AS OBTAINED BY ASTM TEST METHOD D1557-78, METHOD A, AND SHOULD EXTEND TO A MINIMUM DISTANCE OF TWO FEET (2') BEYOND THE OUTSIDE EDGES OF PAVEMENTS.
37. ALL AREAS ON THE SITE ON WHICH STRUCTURES ARE TO BE PLACED MUST BE COMPACTED TO NINETY PERCENT (90%) DENSITY FOR A MINIMUM DISTANCE OF FIVE FEET (5') BEYOND THE OUTSIDE EDGES OF THE FOUNDATIONS OF THE STRUCTURES. THE DEPTH OF OVEREXCAVATION AND COMPACTION IN PAD AREAS SHALL BE IN ACCORDANCE WITH THE SOILS REPORT. RE-COMPACTION OF OVER-EXCAVATED MATERIAL SHALL BE TO AT LEAST NINETY PERCENT (90%) OF MAXIMUM DRY DENSITY.
38. ALL FILL AREAS TO BE CLEARED OF ALL VEGETATION AND OTHER UNSUITABLE MATERIAL FOR A STRUCTURAL FILL AND THE AREA SCARIFIED TO A DEPTH OF 6".
39. FILL AREAS SLOPING STEEPER THAN 5:1 SHALL BE KEYED AND BENCHED TO SUPPORT FILL.
40. FILL MATERIAL SHALL BE PLACED IN LAYERS NOT EXCEEDING 8" IN COMPACTED THICKNESS AND COMPACTED AT OPTIMUM MOISTURE CONTENT BY APPROVED METHOD.
41. EXCEPT AS OTHERWISE REQUIRED BY THE PLANS AND SPECIFICATIONS, ALL FILL TO BE COMPACTED TO A MINIMUM OF 95% MAXIMUM DENSITY AS DETERMINED BY C.B.C. APPENDIX CHAPTER 33 AND SO CERTIFIED BY TESTS AND REPORTS FROM SOILS ENGINEER.
42. UNAUTHORIZED CHANGES AND USES: THE ENGINEER PREPARING THESE PLANS WILL NOT BE RESPONSIBLE FOR, OR LIABLE FOR, UNAUTHORIZED CHANGES TO OR USES OF THESE PLANS. ANY AND ALL CHANGES TO THESE PLANS MUST BE APPROVED BY PINNACLE CIVIL ENGINEERING, INC.
43. PURSUANT TO SECTION 3317.8 OF THE CALIFORNIA BUILDING CODE, IF THE CIVIL ENGINEER, THE SOILS ENGINEER, OR THE ENGINEERING GEOLOGIST OF RECORD IS CHANGED DURING GRADING, THE WORK SHALL BE STOPPED UNTIL THE REPLACEMENT HAS AGREED IN WRITING TO ACCEPT THEIR RESPONSIBILITY WITHIN THEIR AREA OF TECHNICAL COMPETENCE FOR APPROVAL UPON COMPLETION OF THE WORK. IT SHALL BE THE DUTY OF THE PERMITTEE TO NOTIFY THE BUILDING OFFICIAL IN WRITING OF SUCH CHANGE PRIOR TO THE RECOMMENCEMENT OF SUCH GRADING.
44. IF THE PROJECT IS SUBJECT TO THE PROVISIONS OF THE NATIONAL POLLUTANT DISCHARGE ELIMINATION SYSTEM (NPDES), A "NOTICE OF INTENT" (NOI) TO COMPLY WITH THE TERMS OF THE GENERAL PERMIT TO DISCHARGE STORM WATER ASSOCIATED WITH CONSTRUCTION ACTIVITY (WQ ORDER NO. 2009-200--DWQ) MUST BE FILED WITH STATE WATER RESOURCES CONTROL BOARD IN SACRAMENTO BEFORE THE BEGINNING OF ANY CONSTRUCTION ACTIVITY. COMPLIANCE WITH THE GENERAL PERMIT REQUIRES THAT A STORM WATER POLLUTION PREVENTION PLAN (SWPPP) BE PREPARED, CONTINUOUSLY CARRIED OUT, AND ALWAYS BE AVAILABLE FOR PUBLIC INSPECTION DURING NORMAL CONSTRUCTION HOURS.

ASPHALT CONCRETE PAVING NOTES:

1. ASPHALT CONCRETE: ASPHALT CONCRETE SHALL BE TYPE "A" (MODIFIED) FOR ALL ARTERIAL AND COLLECTOR STREETS AND TYPE "B" (MODIFIED) FOR LOCAL STREETS AND SHALL CONFORM TO THE PROVISIONS IN SECTION 39, "ASPHALT CONCRETE," OF THE STANDARD SPECIFICATIONS AND THESE PROVISIONS.
2. PRIOR TO THE ADDITION OF ASPHALT BINDER, THE COMBINED MINERAL AGGREGATE FOR TYPE "A" (MODIFIED) OR TYPE "B" (MODIFIED) ASPHALT CONCRETE SHALL CONFORM TO THE REQUIREMENTS OF SECTION 39-2.02, "AGGREGATE," OF THE STANDARD SPECIFICATIONS FOR 3/4" MAXIMUM, MEDIUM GRADING.
3. ASPHALT BINDER FOR TYPE "A" (MODIFIED) ASPHALT CONCRETE SHALL BE PG64-10 PERFORMANCE GRADED ASPHALT, UNLESS OTHERWISE DIRECTED BY THE CITY ENGINEER. ASPHALT BINDER FOR TYPE "B" (MODIFIED) ASPHALT CONCRETE SHALL BE PG64-10 PERFORMANCE GRADED ASPHALT, UNLESS OTHERWISE DIRECTED BY THE CITY ENGINEER. THE ASPHALT BINDER SHALL CONFORM TO THE REQUIREMENTS IN THE TABLE FOR "STEAM-REFINED PAVING ASPHALTS," IN SECTION 92-1.02, "GRADES," OF THE STANDARD SPECIFICATIONS.
4. THE AMOUNT OF THE ASPHALT BINDER TO BE MIXED WITH THE MINERAL AGGREGATE SHALL BE DETERMINED BY THE CONTRACTOR IN ACCORDANCE WITH CALIFORNIA TEST METHOD 367 USING SAMPLES OF MATERIALS PROPOSED FOR USE IN THE WORK. THE AMOUNT OF ASPHALT BINDER SHALL BE APPROVED BY THE CITY ENGINEER.
5. AT LEAST 14 DAYS PRIOR TO THE START OF WORK, THE CONTRACTOR SHALL SUBMIT THE FOLLOWING FOR THE CITY ENGINEER'S REVIEW AND APPROVAL:

   A. A LIST OF AGGREGATE AND ASPHALT SOURCES.

   B. DOCUMENTATION VERIFYING THAT THE AGGREGATES TO BE INCORPORATED IN THE WORK CONFORM TO THE REQUIREMENTS IN SECTION 39-2.02, "AGGREGATE," OF THE STANDARD SPECIFICATIONS AND THESE SPECIAL PROVISIONS. MATERIAL SIEVE ANALYSIS AND SAND EQUIVALENT TEST RESULTS SHOULD NOT BE OLDER THAT SIX (6) MONTHS. ALL OTHER TEST RESULTS SHOULD NOT BE OLDER THAN ONE (1) YEAR.

   C. AN ASPHALT CONCRETE MIX DESIGN DETERMINED IN ACCORDANCE WITH CALIFORNIA TEST 367. LABORATORY TEST RESULTS ON WHICH THE DESIGN IS BASED SHALL BE SUBMITTED WITH THE MIX DESIGN ALONG WITH THE THEORETICAL MAXIMUM DENSITY OF THE DESIGN MIXTURE AS DETERMINED BY ASTM D-20471. THE ASPHALT CONCRETE MIX SHALL MEET THE REQUIREMENTS OF SECTION 39-2.02, "AGGREGATE," OF THE STANDARD SPECIFICATIONS AND THESE SPECIAL PROVISIONS. IF THE DATA SUBMITTED SHOWS THAT THE MATERIALS ARE SUBSTANTIALLY THE SAME AS WHEN THE DESIGN WAS PREPARED, THE DESIGN MAY BE UP TO THREE (3) YEARS OLD. THE CONTRACTOR SHALL BEAR ALL THE COSTS ASSOCIATED WITH THE ASPHALT CONCRETE MIX DESIGN.
6. WHERE NEW ASPHALT CONCRETE PAVEMENT IS TO CONFORM TO EXISTING PAVED SURFACES, THE EXISTING PAVEMENT IS TO BE SAW CUT IN A NEAT STRAIGHT LINE, EITHER PARALLEL OR PERPENDICULAR TO THE CENTERLINE OF THE STREET, AND AT A MINIMUM DISTANCE OF ONE (1) FOOT FROM THE EXISTING EDGE OF PAVEMENT.
7. A PRIME COAT WILL NOT BE REQUIRED ON NON-PAVED AREAS TO BE SURFACED PRIOR TO THE PLACEMENT OF ASPHALT CONCRETE. HOWEVER, ALL OTHER REQUIREMENTS OF SECTION 39-4.01, "SUB-GRADE," OF THE STANDARD SPECIFICATIONS SHALL BE MET.
8. THE AREA TO WHICH PAINT BINDER HAS BEEN APPLIED SHALL BE CLOSED TO PUBLIC TRAFFIC. CARE SHALL BE TAKEN TO AVOID TRACKING BINDER MATERIAL ONTO THE EXISTING PAVEMENT SURFACE BEYOND THE LIMITS OF CONSTRUCTION.
9. PAVING SEEMS SHALL BE LOCATED TO MATCH DESIGNED TRAFFIC LANE STRIPE LOCATIONS UNLESS OTHERWISE PERMITTED BY THE CITY ENGINEER.
10. INTERSECTIONS AND TAPERED SHOULDERS SHALL BE SURFACED AS DIRECTED BY THE CITY ENGINEER. ADDITIONAL ASPHALT CONCRETE SHALL BE PLACED AT ROAD CONNECTIONS AND PRIVATE DRIVES, WHERE SHOWN ON PLANS AND AS DIRECTED BY THE CITY ENGINEER AND SHALL BE HAND RAKED, IF NECESSARY, AND COMPACTED TO FORM SMOOTH, TAPERED CONNECTIONS.
11. WHERE THE COMPACTED THICKNESS OF A LAYER OF ASPHALT CONCRETE IS 0.15 FOOT OR LESS, PAVING OPERATIONS SHALL BE CONDUCTED IN SUCH A MANNER THAT, AT THE END OF EACH WORK SHIFT, THE LENGTH OF PAVEMENT ALONG THE LONGITUDINAL DROP-OFF BETWEEN ADJACENT LANES IS NOT GREATER THAN THAT WHICH CAN BE SURFACED DURING THE FOLLOWING SHIFT OF NORMAL PAVING OPERATIONS. ADDITIONAL ASPHALT CONCRETE SHALL BE PLACED ALONG THE TRANSVERSE DROP-OFFS ON EACH LANE. SUCH ADDITIONAL ASPHALT CONCRETE SHALL BE HAND RAKED AND COMPACTED TO FORM TEMPORARY CONFORMS BEFORE THE LANES ARE OPENED TO PUBLIC TRAFFIC. KRAFT PAPER, OR OTHER APPROVED BOND BREAKER, MAY BE PLACED UNDER THE CONFORMS TO FACILITATE THE REMOVAL OF THE CONFORMS WHEN PAVING OPERATIONS RESUME.

ASPHALT CONCRETE PAVING NOTES CONT.:

12. WHERE THE COMPACTED THICKNESS OF A LAYER OF ASPHALT CONCRETE IS MORE THAN 0.15 FOOT, PAVING OPERATIONS SHALL BE CONDUCTED IN SUCH A MANNER THAT THE LAYER OF ASPHALT CONCRETE IS PLACED ON ALL CONTIGUOUS LANES OF THE TRAVELED WAY BEFORE THE LANES ARE OPENED TO PUBLIC TRAFFIC. AT THE END OF EACH WORK SHIFT, THE DISTANCE BETWEEN THE ENDS OF A LAYER OF ASPHALT CONCRETE ON ADJACENT LANES SHALL NOT BE GREATER THAN 10 FEET. ADDITIONAL ASPHALT CONCRETE SHALL BE PLACED ALONG THE TRANSVERSE DROP-OFFS ON EACH LANE. SUCH ADDITIONAL ASPHALT CONCRETE SHALL BE HAND RAKED AND COMPACTED TO FORM TEMPORARY CONFORMS BEFORE THE LANES ARE OPENED TO PUBLIC TRAFFIC. KRAFT PAPER, OR OTHER APPROVED BOND BREAKER, MAY BE PLACED UNDER THE CONFORMS TO FACILITATE THE REMOVAL OF THE CONFORMS WHEN PAVING OPERATIONS RESUME.
13. ASPHALT CONCRETE SHALL BE COMPACTED TO A MINIMUM 92 PERCENT OF THE MAXIMUM THEORETICAL DENSITY AS DETERMINED BY ASTM D-2041. IN-PLACE DENSITY SHALL BE DETERMINED IN ACCORDANCE WITH CALIFORNIA TEST 375.
14. IF THE IN-PLACE DENSITY OF ANY LOT OF ASPHALT CONCRETE IS LESS THAN 92 PERCENT OR GREATER THAN 94 PERCENT OF THE MAXIMUM THEORETICAL DENSITY, THE CONTRACTOR WILL BE ADVISED THAT THE REQUIRED RELATIVE COMPACTION IS NOT BEING ATTAINED AND THAT THE MATERIALS OR PROCEDURES, OR BOTH, IF NEEDED, ARE TO BE ADJUSTED. ASPHALT CONCRETE SPREADING OPERATIONS SHALL NOT CONTINUE UNTIL THE CONTRACTOR HAS NOTIFIED THE CITY ENGINEER OF THE ADJUSTMENT THAT WILL BE MADE IN ORDER TO MEET THE REQUIRED COMPACTION. IF ANY SUCCESSIVE TEST AFTER NOTICE IS GIVEN DOES NOT MEET THE SPECIFIC RANGE, THE ASPHALT CONCRETE REPRESENTED BY THAT LOT SHALL BE REMOVED AND REPLACED WITH MATERIALS THAT MEET THE IN-PLACE DENSITY REQUIREMENTS.
15. IF THE TEST RESULTS FOR ANY LOT OF ASPHALT CONCRETE INDICATE THAT THE RELATIVE COMPACTION IS EITHER LESS THAN 90 PERCENT OR MORE THAN 96 PERCENT THE ASPHALT CONCRETE REPRESENTED BY THAT LOT SHALL BE REMOVED AND REPLACED WITH MATERIAL THAT DOES MEET THE IN-PLACE DENSITY REQUIREMENT.THE CORRECTIVE WORK SHALL BEAT THE CONTRACTOR'S EXPENSE.
16. THE FIELD DENSITY OF COMPACTED ASPHALT CONCRETE SHALL BE DETERMINED BY:

    A. A PROPERLY CALIBRATED NUCLEAR ASPHALT TESTING DEVICE IN THE FIELD, OR
    B. ASTM D1188 WHEN SLABS OR CORES ARE TAKEN FOR LABORATORY TESTING. ZINC STEARATE MAY BE SUBSTITUTED WITH PARAFFIN.
    C. IN CASE OF DISPUTE, METHOD "B" SHALL BE USED.
17. IF THE FINISHED SURFACE OF THE ASPHALT CONCRETE DOES NOT MEET THE SPECIFIED SURFACE TOLERANCES, IT SHALL BE BROUGHT WITHIN TOLERANCE BY EITHER;

    A. ABRASIVE GRINDING WITH EQUIPMENT UTILIZED DIAMOND BLADES,
    B. REMOVAL AND REPLACEMENT, OR
    C. PLACEMENT OF AN ASPHALT CONCRETE OVERLAY.

    THE METHOD WILL BE SELECTED BY THE CITY ENGINEER. THE CORRECTIVE WORK SHALL BE AT THE CONTRACTOR'S EXPENSE.
18. IF ABRASIVE GRINDING IS USED TO BRING THE FINISHED SURFACE TO SPECIFIED TOLERANCES, ADDITIONAL GRINDING SHALL BE PERFORMED, AS NECESSARY, TO ENLARGE THE GRINDING AREA SO THAT THE LONGITUDINAL LIMITS OF GRINDING ARE AT A CONSTANT OFFSET FROM, AND PARAL

PORTLAND CEMENT CONCRETE, CURBS & SIDEWALK:

1. GENERAL
   1.1: PORTLAND CEMENT CONCRETE FOR CURBS, GUTTERS, SIDEWALK, AND OTHER "FLATWORK" SHALL CONFORM TO THE PROVISIONS OF SECTION 40 AND 90 OF THE STATE OF CALIFORNIA STANDARD SPECIFICATIONS, EXCEPT AS OTHERWISE MODIFIED BY THESE PLANS, SPECIFICATIONS, OR CONTRACT DOCUMENTS.

   1.2: SEE ARCHITECT'S PLANS AND CONTRACT DOCUMENTS FOR STRUCTURAL CONCRETE, OR CONCRETE FOR FOUNDATIONS, AND ADDITIONAL SPECIFICATIONS.

   1.3: IN THE EVENT OF A CONFLICT BETWEEN THE CONTRACT DOCUMENTS, THE PLANS, OR ARCHITECT'S SPECIFICATIONS, THE MORE STRINGENT SHALL PREVAIL.

2. CONCRETE
   2.1 CLASS A: CLASS A CONCRETE SHALL HAVE A MINIMUM PORTLAND CEMENT CONTENT OF 564 POUNDS PER CUBIC YARD AND HAVE A MINIMUM COMPRESSIVE STRENGTH OF 4,000 PSI IN 28 DAYS.

   2.2 CLASS B: CLASS B CONCRETE SHALL A MINIMUM PORTLAND CEMENT CONTENT OF 564 POUNDS PER CUBIC YARD AND HAVE A MINIMUM COMPRESSIVE STRENGTH OF 3,500 PSI IN 28 DAYS.

   2.3 CLASS C: CLASS C CONCRETE SHALL HAVE A MINIMUM PORTLAND CEMENT CONTENT OF 470 POUNDS PER CUBIC YARD AND HAVE A MINIMUM COMPRESSIVE STRENGTH OF 2,500 PSI IN 28 DAYS.

3. REINFORCING
   WHERE REINFORCED CONCRETE IS REQUIRED, REINFORCING STEEL CONFORMING TO THE APPLICABLE PROVISIONS OF THE STATE SPECIFICATIONS AND SHALL BE GRADE 60.

4. CONCRETE IMPROVEMENTS
   4.1: PORTLAND CEMENT CONCRETE SHALL BE CLASS B FOR CURB AND GUTTER, ADA RAMPS, AND SIDEWALKS, AND CLASS A FOR CROSS GUTTERS, DRIVEWAY APPROACHES, AND ANY OTHER CONCRETE IMPROVEMENT SUBJECT TO VEHICULAR TRAFFIC. CONCRETE SHALL CONFORM TO THE REQUIREMENTS OF SECTION 90, "PORTLAND CEMENT CONCRETE", OF THE STATE SPECIFICATIONS.

   4.2: CROSS GUTTERS AND DRIVEWAY APPROACHES SHALL BE CONSTRUCTED IN ACCORDANCE WITH PROVISIONS OF SECTION 73, "CONCRETE CURBS AND SIDEWALKS", OF THE STATE SPECIFICATIONS. DRIVE APPROACHES SHALL NOT BE CONSTRUCTED WITHIN TEN FEET OF CURB RETURNS, AS MEASURED FROM RETURN TO EDGE OF APPROACH, UNLESS APPROVED BY THE CITY. EXPANSION JOINTS SHALL BE EITHER (A) ¼-INCH TO ½-INCH PREMOLDED EXPANSION JOINT FILLER PER SECTION 51-1.12 OF THE STATE SPECIFICATIONS, OR (B) 2-INCH DEEP SCORED JOINT (WEAKENED PLANE, EXTRUSION MACHINE ONLY).

   4.3: ALL CONCRETE IMPROVEMENTS SHALL BE CONSTRUCTED IN CONFORMANCE WITH THE STANDARD DETAILS. WHITE PIGMENTED CURING COMPOUNDS, CONFORMING TO ASTM C-309, SHALL BE APPLIED TO ALL EXPOSED SURFACES OF CONCRETE IMPROVEMENTS TO PROVIDE COMPLETE AND UNIFORM COVERAGE. CURING COMPOUND SHALL BE APPLIED WITHIN 1 HOUR OF CONCRETE FINISHING.

   4.4: EXCAVATION, GRADING AND BACKFILLING BEHIND THE CURB RETURNS, INCLUDING GRADING OF PARKWAY, SHALL BE DONE IN ACCORDANCE WITH THE TECHNICAL SPECIFICATIONS FOR EARTHWORK. ANY EXCAVATED MATERIAL NOT NEEDED FOR GRADING OR BACKFILL, IN THE OPINION OF THE CITY, SHALL BE REMOVED FROM THE SITE OF WORK AND DISPOSED OF AT THE EXPENSE OF THE OWNER.

   4.5: THE CONTRACTOR SHALL SUBMIT TO THE ENGINEER FOR APPROVAL THE DESIGN OF THE MIX PROPOSED FOR USE. SAID MIX DESIGN SHALL SET FORTH WEIGHTS OF CEMENT, SAND, COARSE AGGREGATE AND WATER TO BE USED TOGETHER WITH A GRADING ANALYSIS OF SAND AND COARSE AGGREGATE. THE SOURCE OF SUPPLY OF MATERIALS ENTERING INTO THE MIX SHALL ALSO BE GIVEN. THE MIX DESIGN SHALL BE APPROVED BY THE ENGINEER PRIOR TO PLACING ANY CONCRETE.

   4.6: IN ACCORDANCE WITH THE PLANS AND SPECIFICATIONS, INSTALL REBAR DOWELS WHEN NEW PC CONCRETE IS SHOWN TO JOIN EXISTING PC CONCRETE.

CITY OF BAKERSFIELD STORM DRAIN NOTES

STORM DRAIN PIPE: UNLESS OTHERWISE SPECIFIED ON THESE PLANS, THE STORM DRAIN PIPE SHALL BE ONE OF THE FOLLOWING:

A. REINFORCED CONCRETE PIPE (R.C.P): REINFORCED CONCRETE PIPE SHALL BE CLASS III (ASTM C76) AND SHALL CONFORM TO THE REQUIREMENTS OF SECTION 65 OF THE STANDARD SPECIFICATIONS.

   JOINTS SHALL BE RUBBER GASKETED IN CONFORMANCE WITH THE PROVISIONS OF SECTION 651.06 OF THE STANDARD SPECIFICATIONS.

   CEMENT MORTAR JOINTS SHALL ONLY BE USED WHEN THE PIPE INVERT ELEVATION IS HIGHER THAN ONE HALF THE DRAINAGE SUMP DESIGN WATER SURFACE DEPTH ELEVATION.

   WHERE CLASS III, REINFORCED CONCRETE PIPE IS REQUIRED, THE CONTRACTOR MAY, WITH CITY APPROVAL, USE CLASS III NON-REINFORCED CONCRETE PIPE CONFORMING TO THE REQUIREMENTS OF SECTION 651.02A, "CIRCULAR REINFORCED CONCRETE PIPE:, OF THE STANDARD SPECIFICATIONS.

   CONCRETE PIPE SHALL BE LAID IN ACCORDANCE WITH THE REQUIREMENTS OF SECTION 65 OF THE STANDARD SPECIFICATIONS.

   IN ADDITION TO THE ABOVE REQUIREMENTS, ALL RUBBER GASKETED JOINT RINGS SHALL BE CHECKED WITH A GAUGE ALL THE WAY AROUND THE PIPE AFTER THE JOINT HAS BEEN ASSEMBLED TO DETERMINE THAT THE RING HAS BEEN PROPERLY LOCATED AND SEATED. IMPROPERLY MADE JOINTS SHALL BE PULLED APART AND SATISFACTORILY REMADE.

B. CAST-IN-PLACE CONCRETE PIPE: CAST-IN-PLACE MONOLITHIC CONCRETE PIPE SHALL CONFORM TO THE REQUIREMENTS OF SECTION 63 OF THE STANDARD SPECIFICATIONS.

C. POLYVINYL CHLORIDE (P.V.C.) DRAIN PIPE POLYETHLENE (P.E.) DRAINPIPE

   1) SMALL DIAMETER P.V.C. PIPE SHALL BE IN ACCORDANCE WITH UNI-BELL STANDARD UNI-B-4 AND ASTM D 3034, SDR35, AND THE INTEGRAL BELL, GASKETED JOINT SHALL COMPLY WITH UNI-BELL STANDARD UNI-B-4 AND ASTM D 3212.

   2) LARGE DIAMETER P.E. PROFILE WALL PIPE SHALL CONFORM TO ASTM F 894. LARGE DIAMETER P.V.C. PIPE SHALL CONFORM TO UNI-BELL STANDARD UNI-B-9 AND ASTM F 794 AND SHALL HAVE AN INTEGRAL BELL, GASKETED JOINT, THAT CONFORMS TO ASTM D-3212 (J-M PERMA-LOC SERIES 46 GRAVITY SEWER PIPE OR APPROVED EQUAL).

   ALL P.V.C. OR P.E. PIPE SHALL BE INSTALLED AND BEDDED IN STRICT ADHERENCE WITH THE MANUFACTURER'S RECOMMENDATIONS AND IN ACCORDANCE WITH ASTM D 2321 – LATEST EDITION FOR UNDERGROUND INSTALLATION OF FLEXIBLE THERMOPLASTIC SEWER PIPE.

   RUBBER GASKET PIPE SHALL BE USED AT ALL SYPHON LOCATIONS AND FOR ALL LOCATIONS WHERE THE PIPE FLOWLINE IS BELOW THE HYDRAULIC GRADE ELEVATION AT THE PIPE OUTLET. SUBMISSION OF RECENT TEST RESULTS FROM AN INDEPENDENT TESTING LABORATORY CERTIFYING THAT THE PIPE JOINTS MEET ASTM D 3212 (SUSTAINING 26 FEET OF HEAD FOR 10 MINUTES WITH NO VISABLE LEAKAGE) WILL BE REQUIRED PRIOR TO THE APPROVAL OF PLASTIC PIPE FOR USE IN THESE LOCATIONS.

USE OF ANY OF THE ABOVE PIPE MATERIALS SHALL FIRST BE APPROVED BY THE ENGINEER PRIOR TO BIDDING.

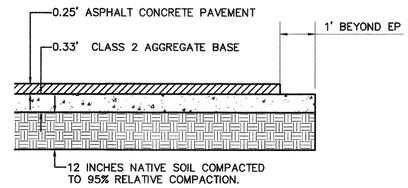

A/3 ASPHALT CONCRETE SECTION
N.T.S.

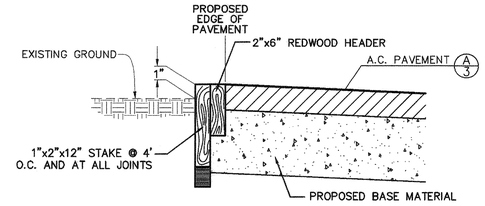

E/3 REDWOOD PAVING BOARD
N.T.S.

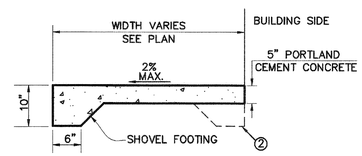

DETAIL NOTES:

① OBTAIN 95% RELATIVE COMPACTION FOR A DEPTH OF 12" BENEATH ALL CONCRETE, PER ASTM D-1557.

② CONSTRUCT SHOVEL FOOTINGS ON BOTH SIDES OF WALK WHEN NOT ABUTTING A STRUCTURE.

③ FLATWORK, OTHER THAN SIDEWALK, SHALL EXCLUDE SHOVEL FOOTING.

④ SHOVEL FOOTINGS MAY BE OMITTED WHEN SIDEWALK ABUTS A CURB.

B/3 PORTLAND CEMENT CONCRETE SIDEWALK
N.T.S.

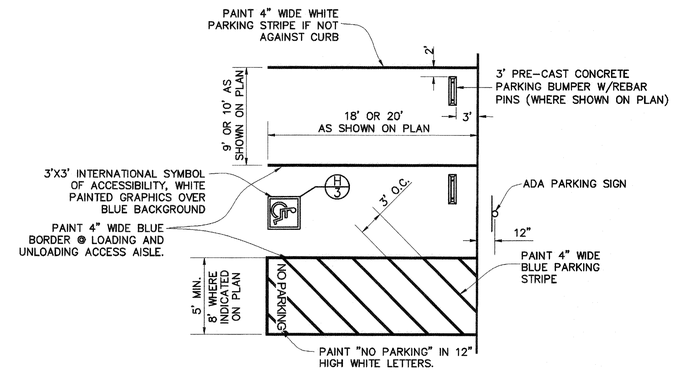

DETAIL NOTES

1. PAINT NEW PARKING STALLS, ADA PARKING STALLS, PAVEMENT MARKINGS, AND ROUTES IN ACCORDANCE WITH THE PLANS.
2. INSTALL 3.0' PRECAST BUMPER BLOCKS BY APPROVED METHOD.
3. REFER TO CAL-TRANS STANDARD DRAWING A90A FOR SPECIFICATIONS NOT COVERED BY THIS PLAN.

F/3 TYPICAL PARKING STALL
N.T.S.

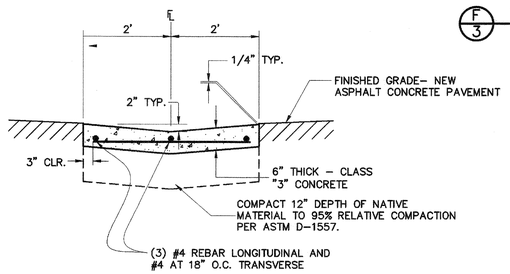

C/3 4' CONCRETE "V" GUTTER
N.T.S.

DETAIL NOTES:
1. 3'X3' SURFACE IDENTIFICATION AT ALL DISABLED PARKING STALLS
2. 3" WIDE LINES
3. SYMBOL SHALL CONSIST OF A WHITE FIGURE ON A BLUE BACKGROUND. THE BLUE SHALL BE COLOR NO, 15090 IN FEDERAL STANDARD 595B [2013 CBC 11B-703.7.2.1]. SEE SITE PLAN FOR LOCATIONS.

G/3 ADA PAVEMENT MARKINGS
N.T.S.

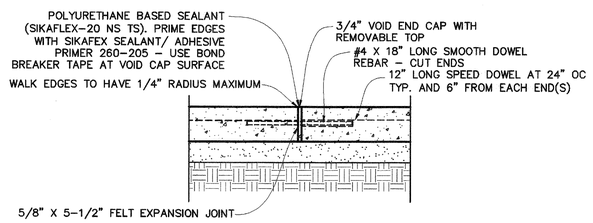

NOTES:

1. EXPANSION JOINTS SHALL BE INSTALLED AT ALL "JOINS" WITH EXISTING PORTLAND CEMENT CONCRETE, AND AT 20' INTERVALS EACH WAY.
2. DECREASE DOWELL LENGTH AS NECESSARY TO ENSURE 3-INCHES OF COVER AT END: MINIMUM 5-INCHES EMBEDMENT.

D/3 EXPANSION JOINT AT CONCRETE "JOINS"
N.T.S.

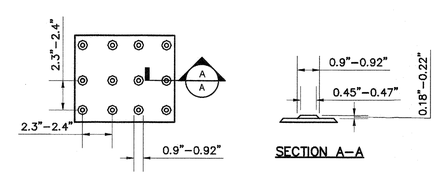

H/3 DETECTABLE WARNING SURFACE
N.T.S.

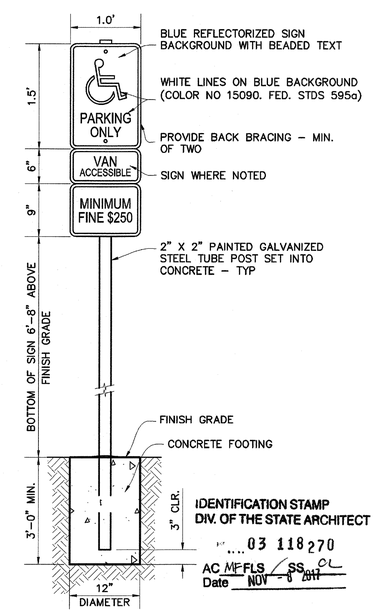

IDENTIFICATION STAMP
DIV. OF THE STATE ARCHITECT
03 118270
AC MF FLS SS OL
Date NOV - 6 2017

I/3 ADA PARKING STALL SIGNS
N.T.S.

LAV//Pinnacle Engineering
5401 Business Park South, Suite 204, Bakersfield, CA 93309
Phone: (661) 869-0184 Fax: (661) 377-0076

MATTHEW K. VOVILLA RCE 43130 EXP. 3/31/18 6-14-17

REVISIONS	DATE
1 REMOVED TREE WELLS, ADDED TRUNCATED DOMES. & REVISED PARKING LAYOUT.	06/20/17
2 REVISIONS PER DSA COMMENTS.	09/21/17

REGISTERED PROFESSIONAL ENGINEER MATTHEW K. VOVILLA RCE 43130 Exp. 3-31-18 CIVIL STATE OF CALIFORNIA

DETAILS & TYPICAL SECTIONS
GRADING & SITE IMPROVEMENT PLAN
FOR NEW PARKING LOT
FREMONT ELEMENTARY SCHOOL
607 TEXAS STREET

BCSD BAKERSFIELD CITY SCHOOL DISTRICT

JOB No.:	17-776
DWG NO.:	GRADING
DATE:	06/14/2017
DRAWN BY:	ADA
CHECKED BY:	MKV
SHEET	3 OF 6 SHEETS

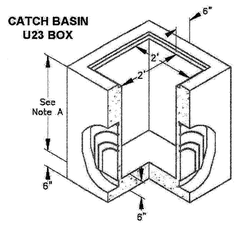

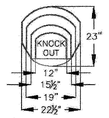

Note A: height is per job specification.

- Knock-Outs available in grade rings and catch basins.
- Opening, locations, and sizes to job specifications.
- With or without bottom.
- Progressive webbed knock-outs provide maximum flexibility, permitting pipe of any size to be neatly and quickly grouted in at jobsite.
- Standard grade rings available in 6" increments up to 4' high.
- All reinforcing steel meets ASTM specifications as required

Cast-in galvanized frame for grates 1½" x 1½" angle iron with anchor bolts

Grooved to receive tongue of grade rings, curb inlets, etc.

6" exposed rebar to allow job site pouring of special curb shapes at grade level, etc.

A/4 CHRISTY U23 CATCH BASIN
N.T.S.

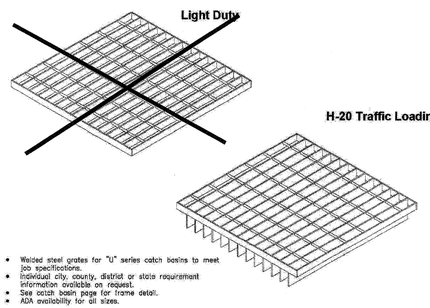

- Welded steel grates for "U" series catch basins to meet job specifications.
- Individual city, county, district or state requirement information available on request.
- See catch basin page for frame detail.
- ADA availability for all sizes.

Ordering Code	Item	Approx. Shipping Weight	Description
U21-NT	GRATE	35	26½" x 26½" (673 x 673 mm) welded, galvanized, non-traffic
U21-HT	GRATE	75	26½" x 26½" (673 x 673 mm) welded, galvanized, H/20 traffic
U32-HT	GRATE	112	26½" x 38" (673 x 965 mm) welded, galvanized, H/20 traffic
U36-HT	GRATE	155	26½" x 50" (673 x 1270 mm) welded, galvanized, H/20 traffic
U43-HT	GRATE	232	35½" x 40" (902 x 1016 mm) welded, galvanized, H/20 traffic
U52-HT	GRATE	280	40" x 47¼" (1016 x 1200 mm) welded, galvanized, H/20 traffic
All grates are galvanized, bicycle proof, and bolt down			

B/4 CHRISTY WELDED STEEL GRATE
N.T.S.

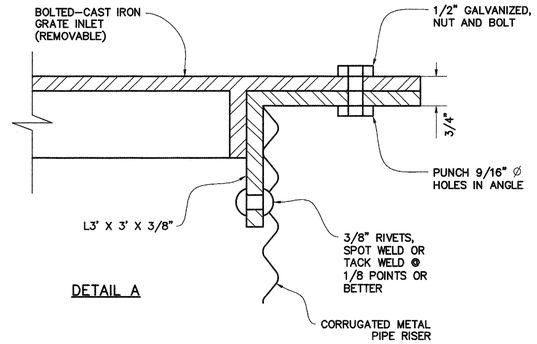

DETAIL A

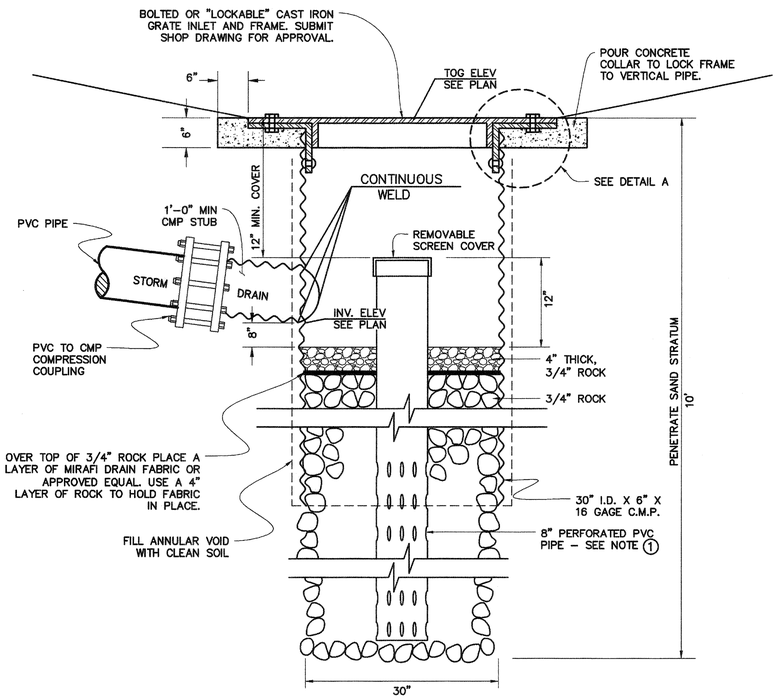

ROCKWELL DETAIL NOTES SECTION

1. EXTEND CENTER PIPE OF ROCKWELL TO BOTTOM OF BORING. CENTER PIPE SHALL BE DR64 WITH GLUED JOINTS. PORTION OF PIPE ABOVE FABRIC SHALL NOT BE PERFORATED.

C/4 ROCKWELL
N.T.S.

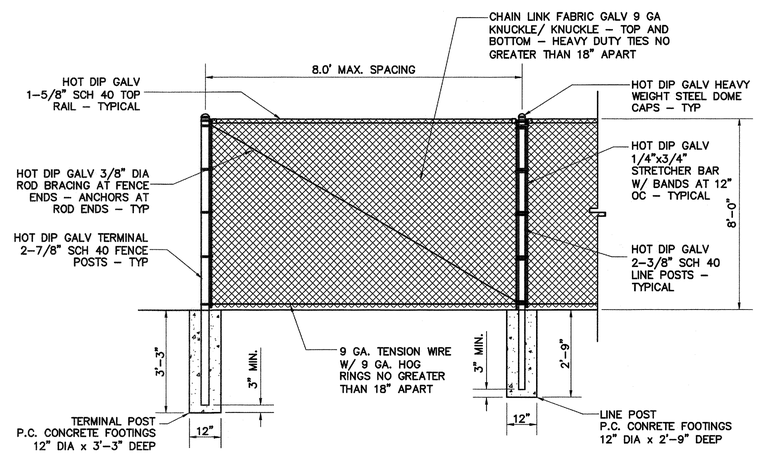

E/4 CHAIN LINK FENCE PANELS
N.T.S.

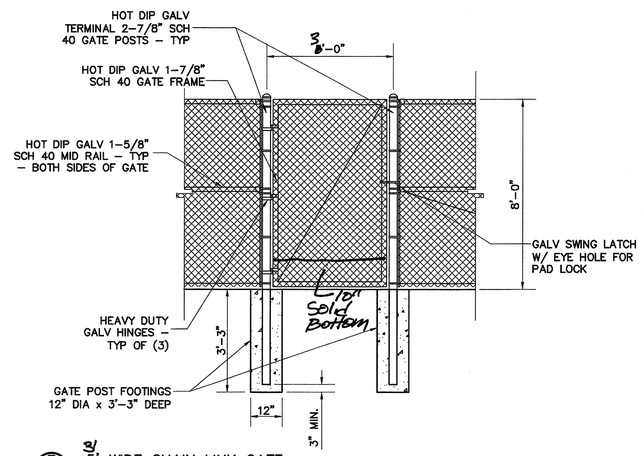

F/4 3'/6' WIDE CHAIN LINK GATE
N.T.S.

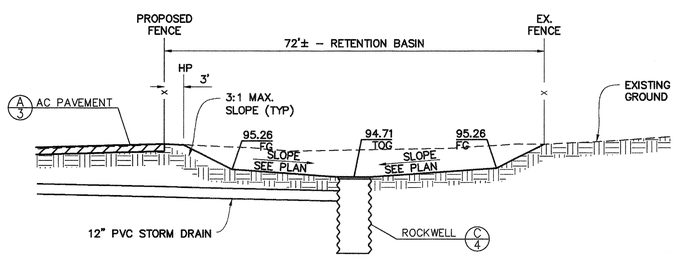

D/4 SECTION - RETENTION BASIN
N.T.S.

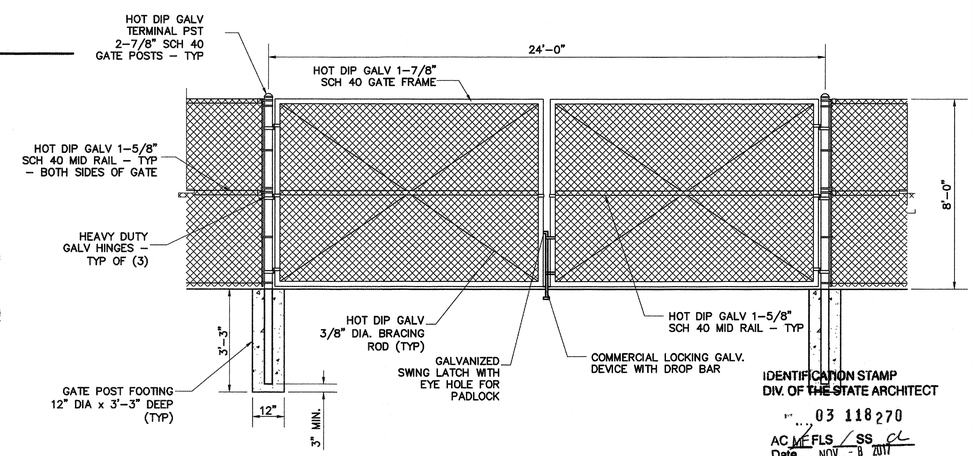

IDENTIFICATION STAMP
DIV. OF THE STATE ARCHITECT
03 118270
AC MF FLS / SS CL
Date NOV - 8 2017

G/4 24' WIDE DOUBLE SWING GATE
N.T.S.

LAV//Pinnacle Engineering
5401 Business Park South, Suite 204, Bakersfield, CA 93309
Phone: (661) 869-0184 Fax: (661) 377-0076

MATTHEW K. VOVILLA RCE 43130 EXP. 3/31/18 6-14-17

REVISIONS	DATE
1 REMOVED TREE WELLS, ADDED TRUNCATED DOMES.	06/20/17
2 & REVISED PARKING LAYOUT.	
3 REVISIONS PER DSA COMMENTS	09/21/17

REGISTERED PROFESSIONAL ENGINEER MATTHEW K. VOVILLA RCE 43130 Exp. 3-31-18 CIVIL STATE OF CALIFORNIA

DETAILS & TYPICAL SECTIONS GRADING&SITE IMPROVEMENT PLAN FOR NEW PARKING LOT FREMONT ELEMENTARY SCHOOL 607 TEXAS STREET

BCSD BAKERSFIELD CITY SCHOOL DISTRICT

JOB No.:	17-776
DWG NO.:	GRADING
DATE:	06/14/2017
DRAWN BY:	ADA
CHECKED BY:	MKV
SHEET	4
OF 6 SHEETS	

DEMOLITION NOTES (THIS SHEET ONLY)

1. THIS SHEET PROVIDED TO SHOW LIMITS OF DEMOLITION AND EXISTING CONDITIONS CLEARLY.
2. THE EXACT DEPTH AND LOCATION OF UNDERGROUND UTILITIES SHALL BE DETERMINED PRIOR TO ANY GROUND DISTURBANCE.
3. CONTRACTOR SHALL RESEARCH ALL EXISTING UTILITIES, AND SHALL "POTHOLE" TO VERIFY THEIR LOCATIONS. EXCEPT AS OTHERWISE SHOWN ON PLANS, ALL EXISTING UTILITIES SHALL BE PROTECTED IN-PLACE.
4. SEE ALSO CONTRACT SPECIFICATIONS AND GENERAL NOTES FOR DEMOLITION REQUIREMENTS.
5. SEE IMPROVEMENT PLANS FOR UTILITY BOX ADJUSTMENTS AND CONCRETE COLLARS.
6. ALL VOIDS CREATED BY DEMOLITION SHALL BE BACKFILLED WITH ENGINEERED FILL. ENGINEERED FILL SHALL BE PLACED IN LAYERS NOT EXCEEDING 6-INCHES IN COMPACTED THICKNESS, AND COMPACTED TO 95% RELATIVE DENSITY PER ASTM D-1557.
7. EXACT LIMITS OF DEMOLITION SHALL BE AS NECESSARY TO ACCOMMODATE NEW CONSTRUCTION, UTILITY CONNECTIONS, BUILDINGS, CONCRETE AND PAVEMENT PATCHES.
8. REMOVE EXISTING FENCE WITHIN LIMITS SHOWN.
9. INTENTIONALLY LEFT BLANK.
10. CONTRACTOR SHALL SALVAGE EXISTING BASKETBALL GOALS, AND RETURN TO THE DISTRICT.
11. CONTRACTOR SHALL REMOVE AND SALVAGE EXISTING LUMINAIRES, AND SHALL TRACE-OUT AND REMOVE CONDUIT AND CONDUCTOR WITHIN LIMITS OF WORK. BACKFILL VOIDS WITH ENGINEERED FILL.

LEGEND – DEMOLITION PLAN

101.00 TOE ×	EXISTING "TOPO" SHOT WITH SURVEYOR'S DESCRIPTION
	EXISTING PC CONCRETE SURFACE
—— X ——	EXISTING CHAIN LINK FENCE
	PROPOSED LIMITS OF DEMOLITION
1	DEMOLITION NOTE – THIS SHEET ONLY
WV	EXISTING WATER VALVE
	EXISTING SEWER CLEAN OUT
— S —	EXISTING SEWER MAIN
— W —	EXISTING WATER MAIN
— G —	EXISTING GAS SERVICE
— SD —	EXISTING STORM DRAIN
	EXISTING SEWER MAIN
	EXISTING UTILITY BOX/VAULT (SIZE VARIES)
	EXISTING UTILITY POLE

AC	ASPHALT CONCRETE PAVEMENT	GB	GRADE BREAK
AP	ANGLE POINT	FP	HINGE POINT
BC	BEGINNING OF CURVE	INV	INVERT
BM	BENCHMARK	NG	NATURAL GROUND
CB	CATCH BASIN	POC	POINT ON CURVE
EC	END OF CURVE	POL	POINT ON LINE
EG	EDGE OF GUTTER	TC	TOP OF CURB
EP	EDGE OF PAVEMENT	TOE	TOE OF SLOPE
ER	END OF ROAD	TOP	TOP OF SLOPE
EX	EXISTING	WV	WATER VALVE
FL	FLOWLINE		
FS	FINISHED SURFACE		
FNC	FENCE		
GRD	GROUND		

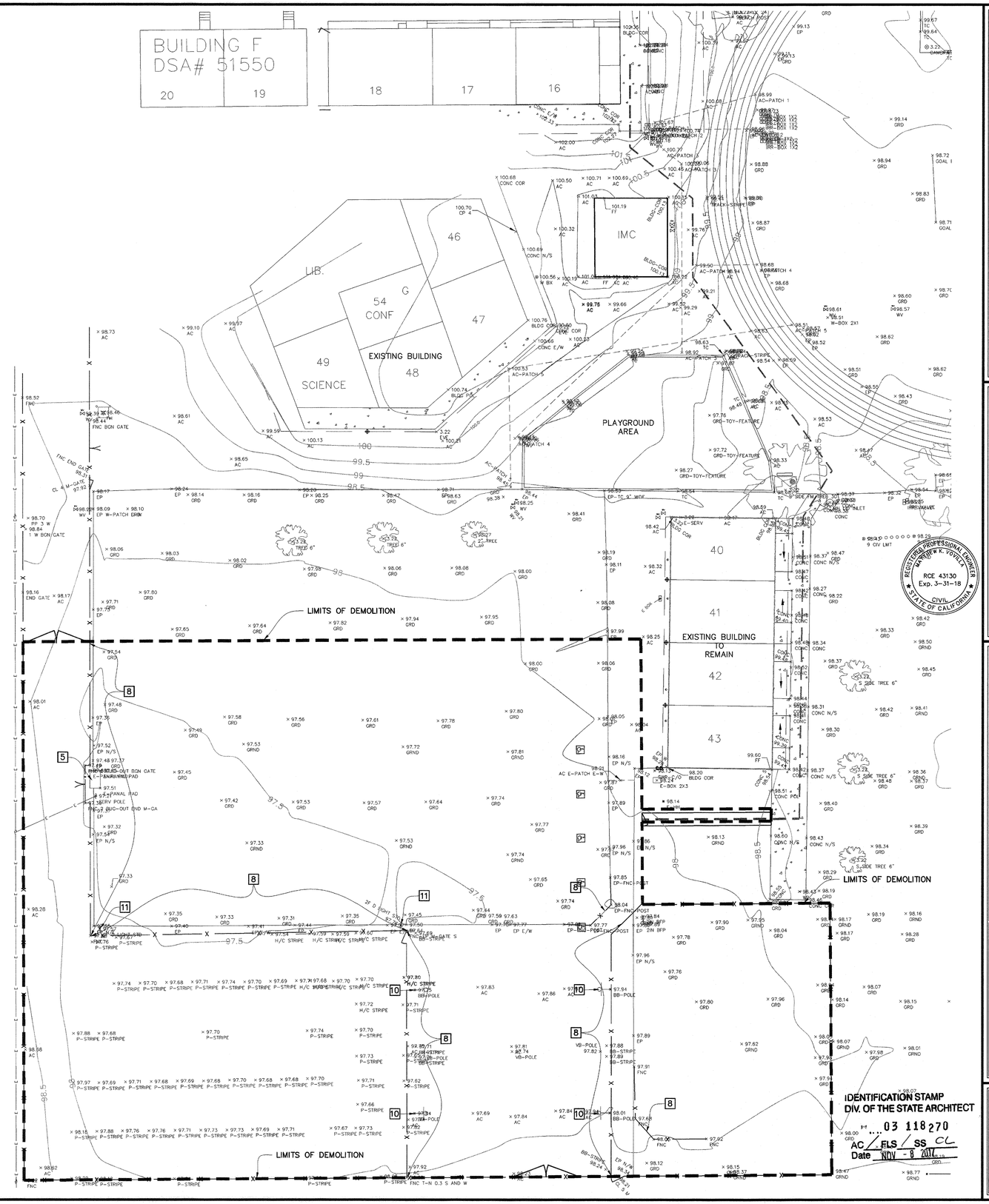

NORTH
SCALE: 1" = 20'
0 10 20 40

LAV//Pinnacle Engineering

5401 Business Park South, Suite 204, Bakersfield, CA 93309
Phone: (661) 869-0184 Fax: (661) 377-0076

MATTHEW K. VOVILLA — RCE 43130 EXP. 3/31/18 — 6-14-17

REVISIONS	DATE
1 REMOVED TREE WELLS, ADDED TRUNCATED DOMES.	06/20/17
2 & REVISED PARKING LAYOUT.	
3 ADJUSTED GRADES FOR REMOVAL OF POR. OF PAVEMENT.	07/21/17

DEMOLITION PLAN
GRADING & SITE IMPROVEMENT PLAN
FOR NEW PARKING LOT
FREMONT ELEMENTARY SCHOOL
607 TEXAS STREET

BAKERSFIELD CITY SCHOOL DISTRICT

JOB No.:	17-776
DWG NO.:	GRADING
DATE:	06/14/2017
DRAWN BY:	ADA
CHECKED BY:	MKV
SHEET	5
	OF 6 SHEETS

CONSTRUCTION NOTES:

1. PRIOR TO COMMENCEMENT OF WORK, CONTRACTOR SHALL SUBMIT A PLAN TO THE DISTRICT FOR SAFE PASSAGE OF VEHICLES AND PEDESTRIANS AROUND WORK LIMITS. PLAN SHALL CORDONE OFF WORK AREAS WITH CAUTION TAPE, DELINEATORS AND BARRICADES. PLAN SHALL INCLUDE TRAFFIC CONTROL ON PUBLIC STREETS, PARKING CONTROL, AND SHALL NOT INTERRUPT STUDENT DROP-OFFS. PLAN IS SUBJECT TO APPROVAL BY DISTRICT.
2. CONTRACTOR SHALL PERFORM ALL NECESSARY DEMOLITION WITHIN THE LIMITS OF WORK. PROTECT EXISTING UTILITIES AND IMPROVEMENTS THAT ARE TO REMAIN. CUT AND CAP EXISTING IRRIGATION LINES, SEWER, AND WATER LINES AT DEMOLITION LIMITS. CONTRACTOR SHALL RECORD DEPTH AND LOCATION OF CAP. ALL IMPROVEMENTS TO BE REMOVED SHALL BE SAWCUT.
3. GRADE SITE TO THE LINES AND ELEVATIONS INDICATED ON THE PLANS. ANY EXCESS MATERIAL SHALL BECOME THE PROPERTY OF THE CONTRACTOR AND SHALL BE REMOVED FROM THE SITE.
4. SAWCUT EXISTING PAVEMENT AND JOIN.
5. WITHIN LIMITS INDICATED ON THE PLANS, FURNISH, PLACE AND COMPACT ASPHALT CONCRETE PAVEMENT TO THE LINES AND GRADES SHOWN ON THE PLANS, AND IN ACCORDANCE WITH STRUCTURAL SECTION DETAIL HEREIN.
6. CONSTRUCT PC CONCRETE WALKS IN ACCORDANCE WITH DETAIL B/3 HEREIN. NEW WALKS SHALL MEET ALL STATE AND FEDERAL REQUIREMENTS INCLUDING THE AMERICANS WITH DISABILITIES ACT (ADA). FORMS SHALL BE CHECKED FOR ADA COMPLIANCE PRIOR TO POURING CONCRETE.
7. FURNISH AND INSTALL PC CONCRETE EXPANSION JOINTS BETWEEN ANY PC STRUCTURES PER DETAIL D/3 HEREIN, AND IN ACCORDANCE WITH THE INTERVALS SPECIFIED IN THE STANDARD SPECIFICATIONS.
8. PAINT PARKING STALLS, PAVEMENT PARKINGS, AND ROUTES IN ACCORDANCE WITH THE PLANS AND DETAILS HEREIN.
9. FURNISH AND INSTALL ACCESSIBLE PARKING SIGNS IN ACCORDANCE WITH DETAIL 1/3 HEREIN.
10. FURNISH AND INSTALL 3-FOOT PARKING BUMPER.
11. FURNISH AND INSTALL ADA APPROVED DETECTABLE/TACTILE WARNING SURFACE TILE (TRUNCATED DOME MAT) WHERE SHOWN ON PLAN.
12. CONSTRUCT 4-FOOT WIDE PC CONCRETE VEE GUTTER PER DETAIL C/3 HEREIN.
13. FURNISH AND INSTALL REDWOOD HEADER BOARD ALONG EDGE OF PAVEMENT PER DETAIL E/3 HEREIN.
14. FURNISH AND INSTALL 24-INCH DRAIN INLET.
15. FURNISH AND INSTALL 12-INCH PVC DRAIN PIPE.
16. FURNISH AND INSTALL ROCKWELL IN ACCORDANCE WITH DETAIL C/4 HEREIN.
17. FURNISH AND INSTALL NEW FENCE IN ACCORDANCE WITH DETAIL E/4 HEREIN.
18. FURNISH AND INSTALL 3-FOOT MAN-GATE IN ACCORDANCE WITH DETAIL F/4 HEREIN.
19. FURNISH AND INSTALL 24-FOOT WIDE DOUBLE SWING GATE IN ACCORDANCE WITH DETAIL G/4 HEREIN.
20. REMOVE AND REPLACE FENCING FABRIC AS NECESSARY FOR NEW CONSTRUCTION. IF NECESSARY FOR SITE SECURITY, FURNISH AND INSTALL TEMPORARY FENCING UNTIL PERMANENT FENCE OR FABRIC IS INSTALLED.
21. ADJUST ALL EXISTING UTILITY BOXES TO FINISHED GRADE. CONCRETE COLLARS SHALL BE POURED AROUND CLEAN-OUTS, BLOW-OFFS AND ANY OTHER UTILITY BOXES. NEW ASPHALT CONCRETE SHALL BE SAWCUT FOR CONCRETE COLLARS.
22. SEE SEPARATE ELECTRICAL PLANS FOR PARKING LOT LIGHTING.

LEGEND – GRADING PLAN

	PROPOSED ASPHALT CONCRETE SURFACE
4.	PROPOSED PC CONCRETE SURFACE
	PROPOSED TRUNCATED DOMES
100.50 TC / 100.00 FL	DESIGN ELEVATION
1.50%	DESIGN SLOPE
—— X ——	PROPOSED CHAIN LINK FENCE
	PROPOSED PARKING LOT LIGHT
— — S — —	EXISTING SEWER LINE
— — W — —	EXISTING WATER LINE
— — G — —	EXISTING GAS SERVICE LINE
— — SD — —	EXISTING STORM DRAIN
98.28 CONC ×	EXISTING "TOPO" SHOT WITH SURVEYOR'S DESCRIPTION
4.	EXISTING PC CONCRETE SURFACE
—— X —— X ——	EXISTING CHAIN LINK FENCE
	EXISTING UTILITY BOX/VAULT (SIZE VARIES)
	EXISTING EDGE OF PAVEMENT
	EXISTING UTILITY POLE
—— E ——	EXISTING OVERHEAD UTILITY LINE
AC	ASPHALT CONCRETE PAVEMENT
AP	ANGLE POINT
BM	BENCHMARK
CB	CATCH BASIN
CONC	CONCRETE
EC	END OF CURVE
EG	EDGE OF GUTTER
EP	EDGE OF PAVEMENT
ER	END OF ROAD
EX	EXISTING
FL	FLOWLINE
FF	FINISHED FLOOR
FS	FINISHED SURFACE
FNC	FENCE
GRD	GROUND
GV	GAS VALVE
ICV	IRRIGATION CONTROL VALVE
IRR	IRRIGATION
TOR	TOP OF RAMP
LNDG	TOP OF LANDING

GB	GRADE BREAK
FP	HINGE POINT
INV	INVERT
LP	LIP OF GUTTER
NG	NATURAL GROUND
POC	POINT ON CURVE
POL	POINT ON LINE
TC	TOP OF CURB
TOE	TOE OF SLOPE
TOG	TOP OF GRATE
TOP	TOP OF SLOPE
TW	TOP OF WALL
TYP	TYPICAL
WM	WATER METER
WTR	WATER
WV	WATER VALVE
TF	TOP OF FOOTING
±	APPROXIMATE
N/S/E/W	NORTH/SOUTH/EAST/WEST

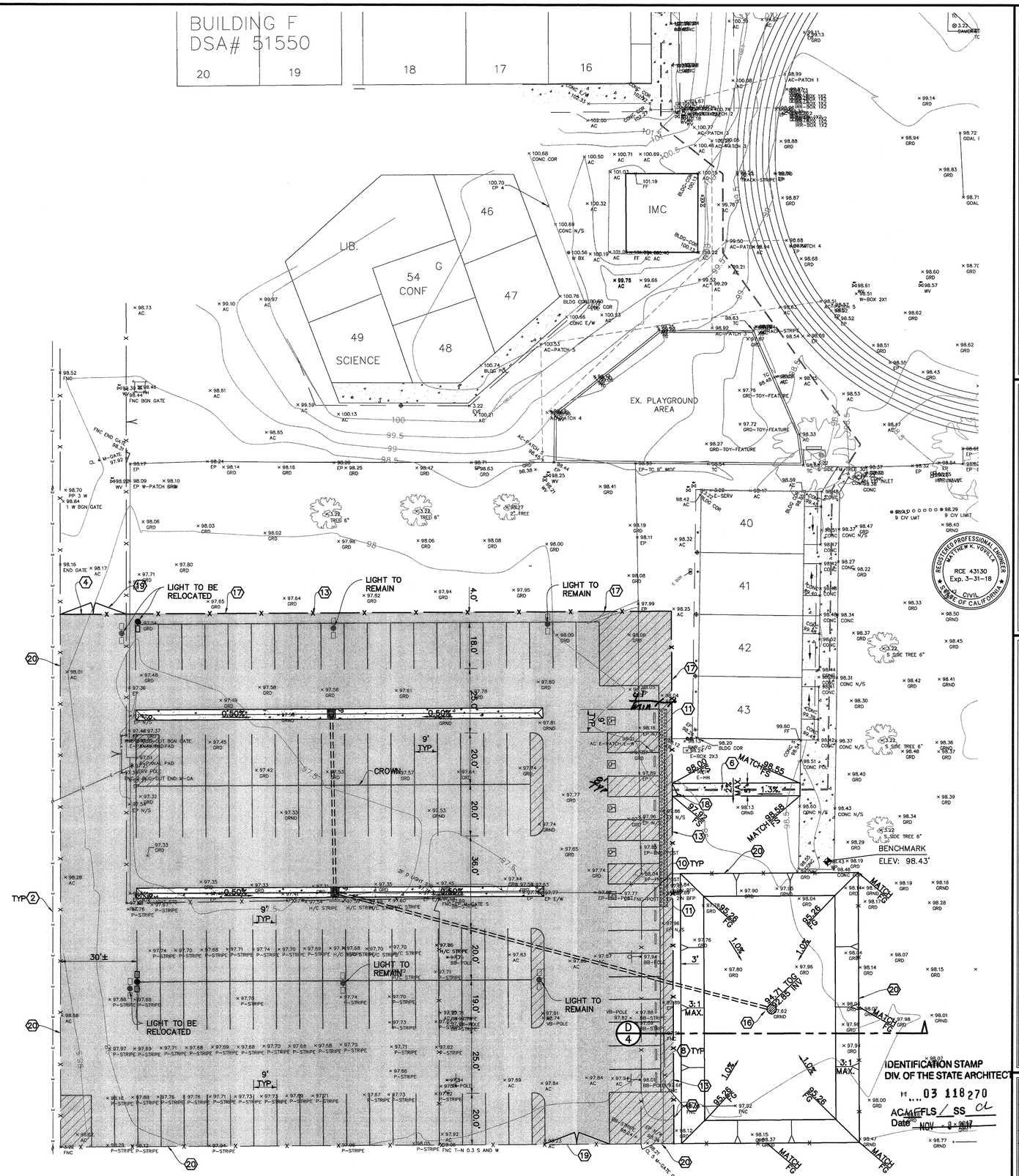

REGISTERED PROFESSIONAL ENGINEER MATTHEW K. VOVILLA RCE 43130 Exp. 3-31-18 CIVIL STATE OF CALIFORNIA

IDENTIFICATION STAMP
DIV. OF THE STATE ARCHITECT
03 118270
AC MFFLS / SS
Date NOV - 8 2017

LAV//Pinnacle Engineering
5401 Business Park South, Suite 204, Bakersfield, CA 93309
Phone: (661) 869-0184 Fax: (661) 377-0076

MATTHEW K. VOVILLA RCE 43130 EXP. 3/31/18 6-14-17

REVISIONS	DATE
1 REMOVED TREE WELLS, ADDED TRUNCATED DOMES, & REVISED PARKING LAYOUT.	06/20/17
2 ADJUSTED GRADES FOR REMOVAL OF POR. OF PAVEMENT.	07/21/17
3 REVISIONS PER AS-BUILT LIGHT AND GRATE LOCATIONS.	08/15/17
4 REVISIONS PER DSA COMMENTS	08/21/17

GRADING & SITE IMPROVEMENT PLAN
PARKING LOT & NEW RELOCATABLE
FREMONT ELEMENTARY SCHOOL
607 TEXAS STREET

BCSD BAKERSFIELD CITY SCHOOL DISTRICT

JOB No.:	17-776
DWG NO.:	GRADING
DATE:	06/14/2017
DRAWN BY:	ADA
CHECKED BY:	MKV
SHEET	6
	OF 6 SHEETS

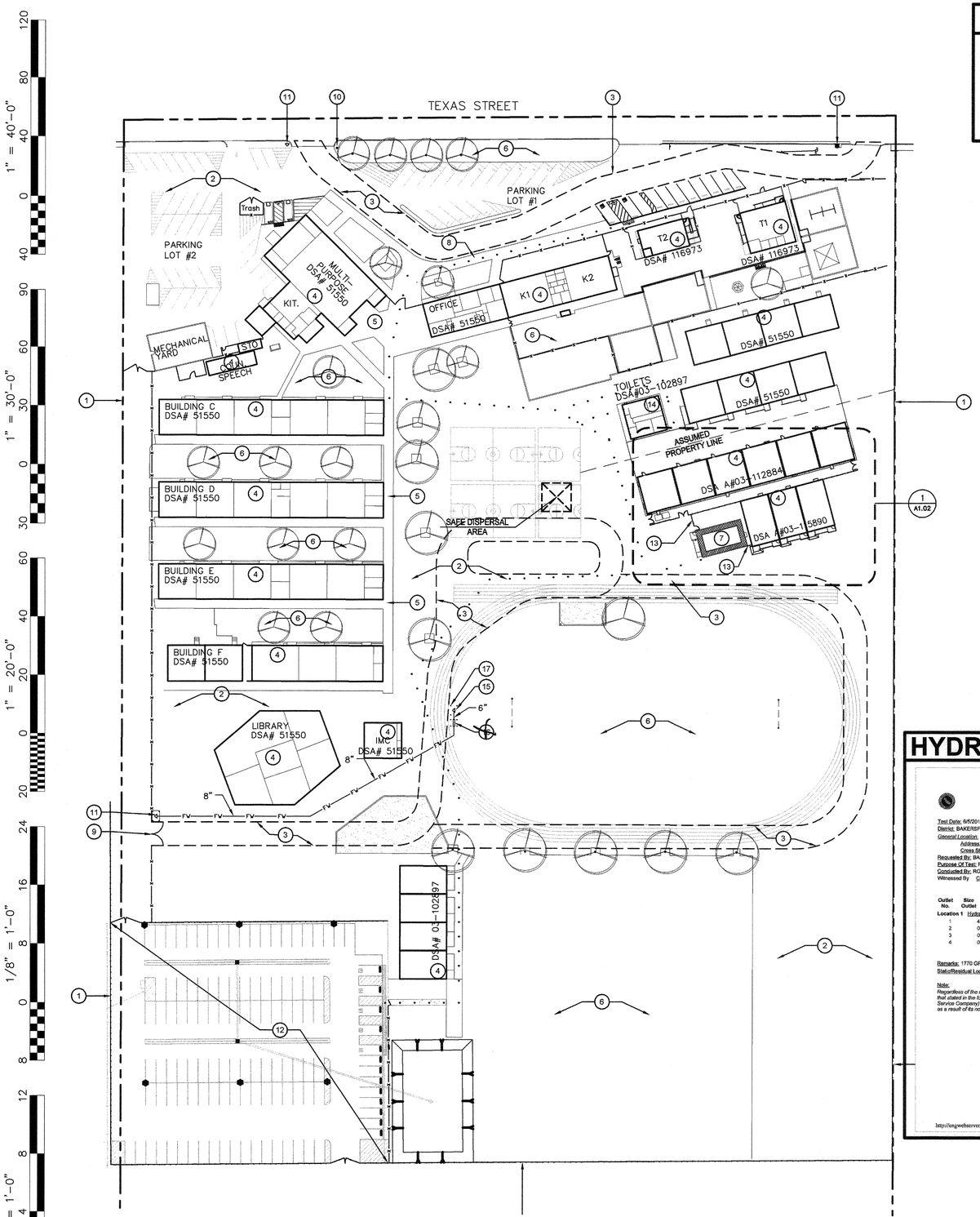

OVERALL SITE PLAN

PARKING LOT AND OFFICE PORTABLE

SCALE: ########

LEGEND

- INDICATES EXISTING BUILDING TO REMAIN (NO WORK)
- INDICATES NEW PORTABLE BUILDING UNDER THIS APPLICATION
- FIRE TRUCK ACCESS
- INDICATES ACCESSIBLE PATH OF TRAVEL

GENERAL NOTES

A. GENERAL CONTRACTOR SHALL FIELD VERIFY ALL SITE CONDITIONS PRIOR TO BID. IF ANY DISCREPANCIES ARE FOUND, THE ARCHITECT SHALL BE NOTIFIED IN WRITING.

B. CONTRACTOR SHALL BE RESPONSIBLE FOR THE CORRECTNESS OF LAYOUTS AND ESTABLISHED LOCATIONS OF BURIED UTILITY LINES. ANY UTILITIES REQUIRING RELOCATION SHALL BE THE RESPONSIBILITY OF THE GENERAL CONTRACTOR CONTACT APPLICABLE GOVERNING AGENCIES REGARDING ARRANGEMENT AND COORDINATION OF WORK.

C. GENERAL CONTRACTOR WILL BE RESPONSIBLE FOR ANY COMPACTION RETEST DUE TO INITIAL FAILURE.

D. PROJECT INSPECTOR SHALL BE EMPLOYED BY THE OWNER, APPROVED BY THE RESPONSIBLE ARCHITECT AND DSA.

E. A COPY OF TITLE-24, ALL PARTS APPLICABLE, TO BE KEPT AT THE JOB SITE AT ALL TIMES.

F. ADDENDA SHALL BE SIGNED BY THE ARCHITECT (RESPONSIBLE IN CHARGE) AND APPROVED BY DSA.

G. C.C.D.s SHALL BE SIGNED BY THE ARCHITECT (RESPONSIBLE IN CHARGE), OWNER AND APPROVED BY DSA.

H. TESTING LAB SHALL BE EMPLOYED BY THE OWNER, APPROVED BY THE RESPONSIBLE ARCHITECT AND DSA.

I. ALL WORK SURFACES DISTURBED OR DAMAGED BY THE CONSTRUCTION ACTIVITIES SHALL BE REPAIRED IN KIND, TEXTURED AND FINISHED TO MATCH ADJACENT SURFACES.

J. NEW CONCRETE WALKS SHALL HAVE SLOPES NOT TO EXCEED 1 IN 20 IN THE DIRECTION OF PATH OF TRAVEL. PROVIDE CONTROL JOINTS ("C.J.") AT 5'-0" O.C. MAX. AND EXPANSION JOINTS NOT TO EXCEED 30'-0" MAX. PROVIDE MEDIUM BROOM FINISH ON ALL WALKS.

K. ALL BUILDING AND ROOM NAMES INDICATED ON THESE CONSTRUCTION DOCUMENTS ARE "NOT" THE ACTUAL BUILDING/ ROOM SIGNAGE DESIGNATION. THE GENERAL CONTRACTOR SHALL FURNISH, INSTALL AND COORDINATE ALL REQUIRED SIGNAGE WITH THE OWNER/ARCHITECT PRIOR TO STARTING CONSTRUCTION.

L. GENERAL CONTRACTOR WILL BE RESPONSIBLE TO COORDINATE RELOCATABLE BUILDING DELIVERY DATES TO THE SCHOOL SITE WITH THE MFGR.

M. THE GENERAL CONTRACTOR SHALL CONSTRUCT ALL NEW RELOCATABLE BUILDING FOUNDATIONS AS PER THE RELOCATABLE BUILDING MANUFACTURER'S DRAWINGS AND SPECIFICATIONS.

N. THE GENERAL CONTRACTOR SHALL BE RESPONSIBLE TO PROVIDE ALL HOOK-UPS TO THE RELOCATABLE BUILDINGS AFTER INSTALLATION HAS BEEN COMPLETED BY THE MANUFACTURER.

O. 5'-0" DEEP x 5'-0" WIDE MINIMUM LANDINGS AT DOORWAYS SHALL BE AS DETAILED AND SHALL HAVE SLOPES (IN ANY DIRECTION) OF NOT GREATER THAN 1/4 IN 12 SLOPE. SLOPES SHALL BE AWAY FROM DOORWAYS.

P. GENERAL/SITE CONTRACTOR SHALL FIELD VERIFY THAT EXISTING PATH OF TRAVEL (P.O.T.) IS A MINAMUM OF 4'-0" WIDE AND IS SLIP RESISTANT. IF IT IS NOT, THEN THE CONTRACTOR SHALL NOTIFY THE ARCHITECT OF RECORD AND A REMEDY OR ALTERNATE P.O.T. WILL BE PROVIDED.

Q. THE MAXIMUM DROP BETWEEN EXISTING FINISHED GRADES AND THE TOP OF THE P.O.T. SHOULD NOT EXCEED 4". IF IT DOES, PROVIDE THE NECESSARY WARNING CURB PER CBC SEC. 11B-303.5.

R. CONTRACTOR TO CONFIRM ALL ELEMENTS SHOWN ON ACCESSIBLE PATH COMPLY WITH 2016 CBC. THIS IS TO INCLUDE PARKING STALL SIGNAGE AND STRIPING.

PARKING LOT CALCULATION

PARKING LOT #1 (DSA # 03-112884)

TOTAL STALLS PROVIDED:	28
ACCESSIBLE STALLS REQUIRED:	2, (1 VAN)
ACCESSIBLE STALLS PROVIDED:	2, (1 VAN)

PARKING LOT #2 (DSA # 03-112884)

TOTAL STALLS PROVIDED:	37
ACCESSIBLE STALLS REQUIRED:	2, (1 VAN)
ACCESSIBLE STALLS PROVIDED:	2, (1 VAN)

PARKING LOT #3 (THIS APPLICATION)

TOTAL STALLS PROVIDED:	118
ACCESSIBLE STALLS REQUIRED:	5, (1 VAN)
ACCESSIBLE STALLS PROVIDED:	5, (1 VAN)

KEY NOTES

1. (E) CHAIN LINK FENCE TO REMAIN
2. (E) A.C. PAVING TO REMAIN
3. 20'-0" WIDE FIRE TRUCK ACCESS LANE
4. (E) BUILDING TO REMAIN (NO WORK)
5. (E) CONCRETE WALK TO REMAIN (NO WORK)
6. (E) TURF TO REMAIN
7. NEW OFFICE ON WOOD FOUNDATION AND METAL RAMPS PER MFR. PC DRAWINGS. INSTALL PER MANUFACTURERS DRAWINGS
8. ACCESSIBLE PATH OF TRAVEL, PER ACCESSIBILITY NOTE THIS SHEET
9. EXISTING PAIR OF 20' FIRE TRUCK ACCESS GATE WITH KNOX BOX PER LOCAL FIRE MARSHAL APPROVAL.
10. (E) SITE ENTRANCE SIGN PER DSA A# 03-112884
11. (E) FIRE HYDRANT
12. NEW PARKING LOT. SEE CIVIL DRAWINGS
13. NEW CHAINLINK FENCE W/ MAINTENANCE GATE. SEE DETAIL 13/A1.03
14. EXISTING ACCESSIBLE STUDENT, STAFF RESTROOM BUILDING AND DRINKING FOUNTAIN PER DSA #03-102897. SEE DETAIL 15/A1.03 FOR MODIFICATIONS TO ROOMS 101 AND 102
15. NEW FIRE HYDRANT PER CITY STANDARDS
16. ~~NEW DOUBLE CHECK VALVE~~
17. NEW PIPE BOLLARDS PER DETAIL 1/A1.04. TYP. OF 8

SAFE DISPERSAL

TEMP CLASSROOMS.

1 (N) OFFICE (24'x40')	= 960 S.F.
	TOTAL = 960 S.F.
960 S.F. / 20 S.F. PER OCCUPANT	= 48 OCCUPANTS
48 OCCUPANTS x 5 S.F. / OCCUPANT	= 240 S.F. REQ'D
600 S.F. PROVIDED (24' x 25' AREA)	= OK

NOTE:
SAFE DISPERSAL AREA MUST BE 50' MIN. AWAY FROM ANY BUILDING. AREA SHALL BE PROVIDED WITH A SAFE AND UNOBSTRUCTED PATH OF TRAVEL FROM ANY BUILDING

FLOOD ZONE

FLOOD ZONE DETERMINATION	ZONE "X" (0.2%)
F.I.R.M. PANEL DESIGNATION	06029C2325E
EFFECTIVE F.I.R.M. DATE	9/26/2008
BASE FLOOD ELEVATION (BFE)	-400 FT
COMMUNITY ORDINANCE	BMC 15.74.040

HYDRANT FLOW TEST

Page 1 of 1

California Water Service Company
Fire Flow Test

Test Date: 6/5/2017 Test Time: 10:30 Approved Date:
District: BAKERSFIELD Zone: LOW Plat: 34-38
General Location:
Address: 607 TEXAS ST
Cross Street: HOOVER ST
Requested By: BAKERSFIELD CITY SCHOOL DISTRICT
Purpose Of Test: FIRE FLOW
Conducted By: ROBBIE BROWN - JACK MOORE
Witnessed By: C.W.S. Co:
Others: D PEREIZ

Outlet No.	Size Outlet	PITOT	Observed	Static Pressure	Residual Pressure	Flow Observed	Flow Avail.@20
Location 1	Hydrant #: 3370 Address: 607 TEXAS ST						
1	4	17	1771	53	45	1771	3807
2	0	0	0				
3	0	0	0				
4	0	0	0				
			Total Flow Observed Available @20:			1771	3807

Remarks: 1770 GPM
Static/Residual Location: FH #3369 200' WEST OF RODMAN ST

Note:
Regardless of the results of this test, California Water Service Company assumes no liability beyond that stated in the following excerpt from the P.U.C. Tariff Schedule: "The utility (California Water Service Company) will supply only such water at such pressure as may be available from time to time as a result of its normal operation of the system."

http://engwebserver/fireflow/QRYFIREFLOWDETAILS.ASP?ID=18663 6/5/2017

LOCAL FIRE AUTHORITY REVIEW

DSA 810

LOCAL FIRE AUTHORITY REVIEW

To facilitate the Division of the State Architect's (DSA) approval of the Fire/Life Safety portion of a project, DSA requires Local Fire Authority (LFA) review of certain elements as identified in this form. Use of this form is mandatory for projects that add square footage to a campus or if any item on this form is relevant to the project. For additional information, see DSA 810 Instructions and DSA Policy 09-01.

PROJECT INFORMATION

School District/Owner: Bakersfield City School District
Project Name/School: Fremont Elementary
Project Address: 607 Texas, Bakersfield Ca. 93307

LOCAL FIRE AUTHORITY (LFA)

LFA Agency Name: Bakersfield Fire
LFA Reviewer Name: Ernie Medina Title: Fire Plans Examiner
Email: emedina@bakersfieldfire.us Telephone Number: 661.326.3682

I have reviewed and responded to the applicable items for this project as listed below.
Note: Only sign this form when it is imaged onto the site plan. A loose form is not acceptable to DSA.
LFA Reviewer's Signature: Ernie Medina **Date:** 6/30/17

Review Key: "Y" = Complies with LFA requirements; "N" = Not approved (complete Section 8); "NA" = Not applicable to the project; "NR" = LFA elects not to review

	Description	Y	N	NA	NR
1	Where an elevator does not meet medical emergency service cab size, per the California Building Code (CBC), use of stairways for emergency rescue and patient transport is acceptable.			X	
2	Access roads, fire lane markings, pavers and gate entrances are in accordance with Title 19, California Code of Regulations and the California Fire Code, Chapter 5.	X			
3	Fire hydrant location and distribution complies with the California Fire Code (or see # 4).	X			
4	Fire hydrant location and distribution complies with NFPA 1142, "Alternate Means." If "NR" is checked, DSA can only approve on-site water storage as an alternate. The signature of the school district official is required to acknowledge the use of alternate means. Signature of School District Official: ____ Date: ____ Print the School District Official's Name: ____			X	
5	The location(s) of the proposed post indicator valve and fire department connection meet the requirements of this jurisdiction.	X			
6	The location(s) of the detector check valve assembly meet the requirements of this jurisdiction.	X			
7	Is the project located in a hazard severity zone area? (CBC, Chapter 7A, Section 701A.) ☐ Yes ☒ No. Check type if "Yes": ☐ Moderate ☐ High ☐ Very High ☐ WIFA (If one of these boxes is checked, the project design must meet the requirements of Chapter 7A.)				
8	COMMENTS (note deficiencies):				

DSA 810 (rev 05-12-14) DIVISION OF THE STATE ARCHITECT — DEPARTMENT OF GENERAL SERVICES — Page 1 of 1 STATE OF CALIFORNIA

ACCESSIBILITY NOTE

THE PATH OF TRAVEL (P.O.T.) IDENTIFIED IN THESE CONSTRUCTION DOCUMENTS IS COMPLIANT WITH THE CURRENT APPLICABLE CALIFORNIA BUILDING CODE ACCESSIBILITY PROVISIONS FOR PATH OF TRAVEL REQUIREMENTS FOR ALTERATIONS, ADDITIONS AND STRUCTURAL REPAIRS. AS PART OF THE DESIGN OF THIS PROJECT, THE P.O.T. WAS EXAMINED AND ANY ELEMENTS, COMPONENTS OR PORTIONS OF THE P.O.T. THAT WERE DETERMINED TO BE NONCOMPLIANT 1) HAVE BEEN IDENTIFIED AND 2) THE CORRECTIVE WORK NECESSARY TO BRING THEM INTO COMPLIANCE HAS BEEN INCLUDED WITHIN THE SCOPE OF THIS PROJECT'S WORK THROUGH DETAILS, DRAWINGS AND SPECIFICATIONS INCORPORATED INTO THESE CONSTRUCTION DOCUMENTS. ANY NONCOMPLIANT ELEMENTS, COMPONENTS OR PORTIONS OF THE P.O.T. THAT WILL NOT BE CORRECTED BY THIS PROJECT BASED ON VALUATION THRESHOLD LIMITATIONS OR A FINDING OF UNREASONABLE HARDSHIP ARE SO INDICATED IN THESE CONSTRUCTION DOCUMENTS

DURING CONSTRUCTION, IF P.O.T. ITEMS WITHIN THE SCOPE OF THE PROJECT REPRESENTED AS CODE COMPLIANT ARE FOUND TO BE NONCONFORMING BEYOND REASONABLE CONSTRUCTION TOLERANCES, THEY SHALL BE BROUGHT INTO COMPLIANCE WITH THE CBC AS A PART OF THIS PROJECT BY MEANS OF A CONSTRUCTION CHANGE DOCUMENT.

ARCHITECT HAS INSPECTED THE PATH OF TRAVEL (P.O.T.) AS INDICATED ON THE PLANS AND HAS FOUND IT TO BE, OR HAS INDICATED ON THE PLANS REMEDIAL WORK WHICH WOULD CAUSE IT TO BE, A BARRIER-FREE ACCESSIBLE ROUTE:

- AT LEAST 48" IN WIDTH; OR AS APPROVED BY CODE
- FREE OF ABRUPT LEVEL CHANGES EXCEEDING 1/4" IF BEVELED AT 1:2 MAX SLOPE, OR VERTICAL LEVEL CHANGES EXCEEDING 1/2"
- WITH A FIRM, STABLE, AND SLIP RESISTANT WALKING SURFACE
- WITH A RUNNING SLOPE OF 1:20 (5%) OR LESS AND WITH A CROSS SLOPE OF 1:50 (2%) OR LESS OR A RAMP WITH A RUNNING SLOPE OF 1:12 (8.33%) AND A CROSS SLOPE OF 1:50 (2%) WITH APPROPRIATE REQUIREMENTS AS DETAILED WITHIN THIS SET OF DOCUMENTS.
- IS FREE OF OVERHEAD OBSTRUCTIONS WITHIN 80" ABOVE THE WALKING SURFACE
- IS FREE OF OBJECTS WHICH PROTRUDE MORE THAN 4" BETWEEN THE HEIGHTS OF 27" AND 80" ABOVE THE WALKING SURFACE

Ownership of Documents
This document, the ideas and designs incorporated herein, as an instrument of Professional Service is the property of Integrated Designs by SOMAM Inc. and is not to be used, in whole or in part for any other project without written authorization.
© COPYRIGHT 2017

integrated designs by SOMAM, Inc.
ARCHITECTURE · ENGINEERING · INTERIOR DESIGN · CONSTRUCTION MANAGEMENT
6011 N. Fresno, Suite 130 — Fresno, California 93710
Phone (559) 435-0861 Fax (559) 435-0887 E-Mail: design@somam.com
www.IntegratedDesigns.com

Revision:	Revision Description:	Rev. Date:

Sheet Title: OVERALL SITE PLAN

Project Name & Address: FREMONT ELEMENTARY PARKING LOT AND OFFICE PORTABLE
BAKERSFIELD CITY SCHOOL DISTRICT
607 TEXAS ST BAKERSFIELD, CA.

Issue Date:	Date:	Designer:	DR:	PC:
07/30/17	11/02/17	--	--	RJD

Agency Approval Stamp:

FILE #: 15-6
IDENTIFICATION STAMP
DIV. OF THE STATE ARCHITECT
OFFICE OF REGULATION SERVICES
03-118270
AC MF FLS SS OL
DATE NOV - 8 2017
TRACKING #: 63221-290.

Stamp(s):

LICENSED ARCHITECT CURTIS E. LYNN No. C-28055 Exp. 5-31-19 STATE OF CALIFORNIA

Job No.: 5269

Sheet No.: A1.01

Release: -

G:\2017frs\17-5269 Fremont Elementary Office and Parking Lot\Sheets\A1.01 OVERALL SITE PLAN.dwg RICHARD DELLANINI

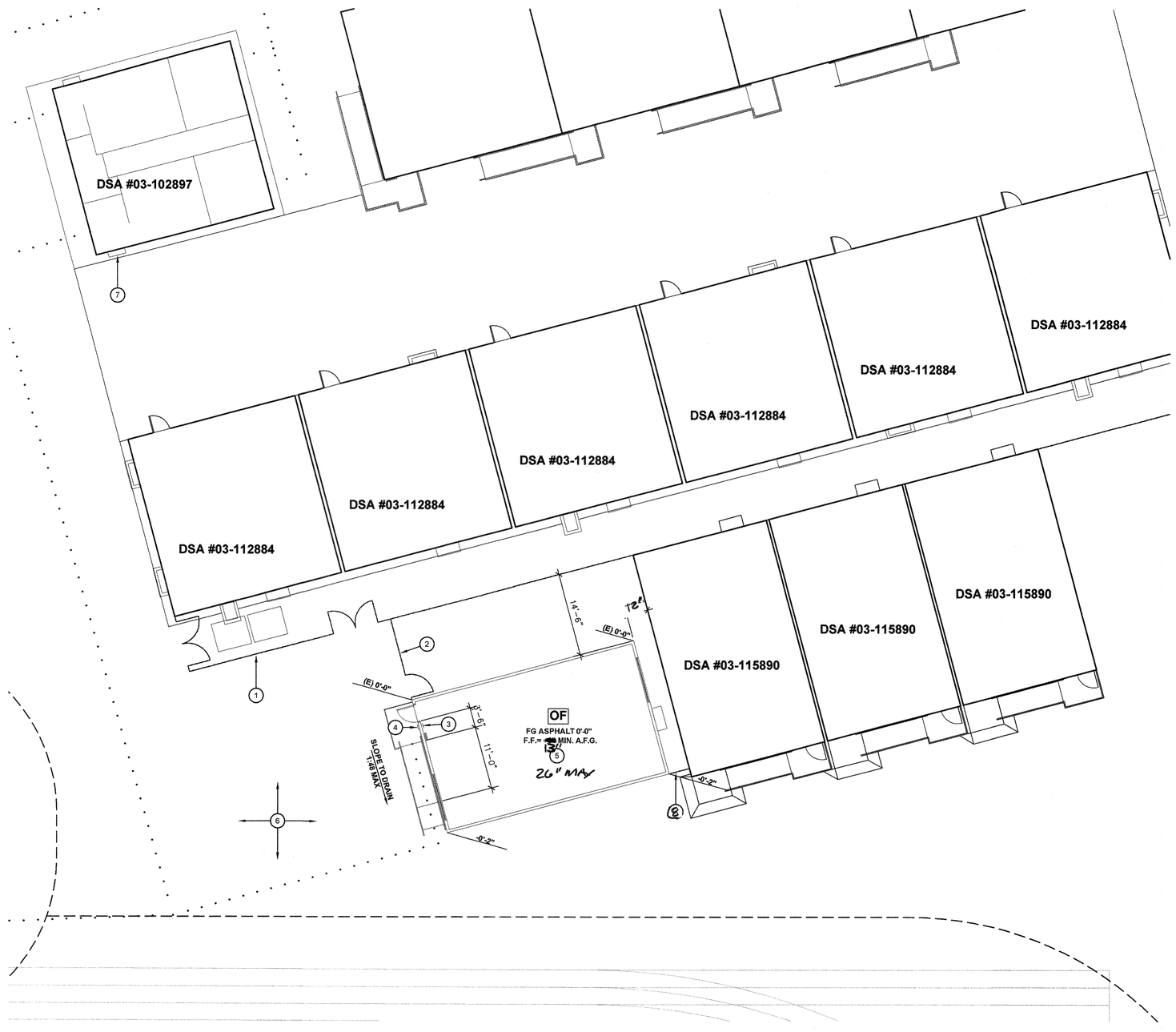

ENLARGED SITE PLAN

PARKING LOT AND OFFICE PORTABLE

SCALE: ########

KEY NOTES

1. EXISTING CHAIN LINK FENCE TO REMAIN.
2. NEW CHAINLINK FENCE W/ MAINTAINENCE GATE, SEE DETAIL 13/A1.03
3. NEW TACTILE EXIT SIGN PER DETAIL 2/A1.03.
4. NEW ROOM IDENTIFICATION AND ISA SIGNAGE, REFER TO DETAILS 3 & 4/A1.03.
5. NEW PORTABLE BUILDING ON RAISED WOOD FOUNDATIONS WITH METAL RAMP PER MANUFACTURER PC DRAWINGS
6. EXISTING A.C. PAVING. NO WORK.
7. EXISTING DRINKING FOUNTAIN TO BE REMOVED AND REPLACE WITH HI/LOW DRINKING FOUNTAIN. SEE DETAILS 6 AND 8/A1.03

8. Closure panel - see Detail 1/A5.50

GENERAL NOTES

A. DETERIORATION OR EXISTING NON-COMPLIANT CONSTRUCTION:

IF ANY CONDITION IS DISCOVERED WHICH, IF LEFT UNCORRECTED, WOULD MAKE THE BUILDING NON-COMPLIANT WITH THE REQUIREMENTS OF THE EDITION OF THE CBC IN FORCE AT THE TIME OF ORIGINAL CONSTRUCTION, THE CONDITION MUST BE CORRECTED IN ACCORDANCE WITH CURRENT CODE REQUIREMENTS. A C.C.D. OR A SEPARATE SET OF PLANS AND SPECIFICATIONS DETAILING AND SPECIFYING THE REQUIRED REPAIR WORK SHALL BE SUBMITTED TO AND APPROVED BY DSA BEFORE PROCEEDING WITH THE REPAIR WORK.

*PER DSA IR 16-1, SEC. 5.4

B. CONTRACTOR SHALL ADJUST ALL DOOR CLOSERS TO A MAXIMUM OPENING FORCE OF 5 LBF

SERIAL NUMBER SCHEDULE

CLSRM	STKP #	SERIAL #
OF	04–116284	12173/74

Ownership of Documents
This document, the ideas and designs incorporated herein, as an instrument of Professional Service is the property of Integrated Designs by SOMAM Inc. and is not to be used, in whole or in part for any other project without written authorization.
© COPYRIGHT 2017

integrated designs by SOMAM, Inc.
ARCHITECTURE · ENGINEERING · INTERIOR DESIGN · CONSTRUCTION MANAGEMENT
6011 N. Fresno, Suite 130 – Fresno, California 93710
Phone (559) 435–0881 Fax (559) 435–0887 E-Mail: design@somam.com
www.integrateddesigns.com

Revision:	Revision Description:	Rev. Date:	Revision:	Revision Description:	Rev. Date:

Sheet Title: ENLARGED SITE PLAN

Project Name & Address:
FREMONT ELEMENTARY
PARKING LOT AND OFFICE PORTABLE
BAKERSFIELD CITY SCHOOL DISTRICT
607 TEXAS ST BAKERSFIELD, CA.

Issue Date: 07/30/17
Date: 10/10/17
Designer: ---
DR: ---
PC: RJD

Agency Approval Stamp:

FILE #: 15–6
IDENTIFICATION STAMP
DIV. OF THE STATE ARCHITECT
OFFICE OF REGULATION SERVICES
03–118270
AC MF FLS CH SS CL
DATE NOV - 8 2017
TRACKING #: 63221–290

Stamp(s):

LICENSED ARCHITECT
CURTIS E. FLYNN
No. C-28[illegible]
REN. 12-31-18
STATE OF CALIFORNIA

Job No.: 5269

Sheet No.: A1.02

Release: -

G:\2017frs\17-5269 Fremont Elementary Office and Parking Lot\Sheets\A1.02 ENLARGED SITE PLAN.dwg RICHARD DELLANINI

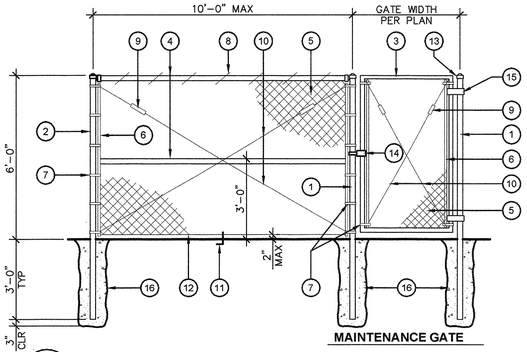

TYPICAL FENCE & GATE KEYNOTES

1. 4" O.D. GALVANIZED STEEL GATE POST (9.1 lb/ft)
2. 2 7/8" O.D. GALVANIZED STEEL END OR CORNER POST (5.79 lb/ft)
3. 2" O.D. GALVANIZED STEEL GATE FRAME (2.72 lb/ft)
4. 1 5/8" O.D. GALVANIZED STEEL HORIZONTAL RAIL (2.27 lb/ft)
5. 2"x2" MESH x 9 GAUGE GALVANIZED FENCE FABRIC WITH KNUCKLED TOP AND BOTTOM SELVAGE. FENCE FABRIC TO BE GALVANIZED BEFORE WEAVING (GBW)
6. 1/4"x3/4" GALVANIZED STEEL STRETCHER BAR
7. GALVANIZED STEEL STRETCHER BAR TENSION BAND, MIN. OF 6 TENSION BANDS
8. 9 GAUGE (0.148" DIA.) GALVANIZED STEEL TIE WIRES OR HOG RINGS AT 15" MAX. SPACING. MIN. 8 TIE WIRES PER EACH 10" HORIZONTAL RAIL
9. GALVANIZED ADJUSTABLE TURNBUCKLE FOR 3/8" DIA. TRUSS ROD
10. 3/8" DIA. GALVANIZED STEEL ADJUSTABLE TRUSS ROD. TRUSS RODS REQUIRED FOR ALL GATE POST PANELS AND END OR CORNER POST PANELS
11. 3/8"x6" GALVANIZED HOOK BOLT WITH NUT IMBEDDED IN MIDWAY BETWEEN POSTS
12. 7 GAUGE (0.177" DIA.) GALVANIZED STEEL TENSION WIRE
13. RAINPROOF CAP
14. LOCKING HASP
15. 180° GATE HINGE, TYP
16. 12"ø CONCRETE POST FOOTING (TYP.)
17. TRIM, LEVER HANDLE & RIM CYLINDER LOCK PER DISTRICT STANDARD 34" – 44"
18. 16ga GATE GUARD
19. 10" HIGH x GATE WIDTH, 16 ga POWDER-COATED METAL KICK PLATE, TYP BOTH SIDES OF GATE.

13 / A1.03 TYPICAL CHAIN LINK FENCE AND GATES

ADY100-01

AT BUILDING ONLY. SEE CIVIL FOR FENCING AT NEW PARKING LOT.

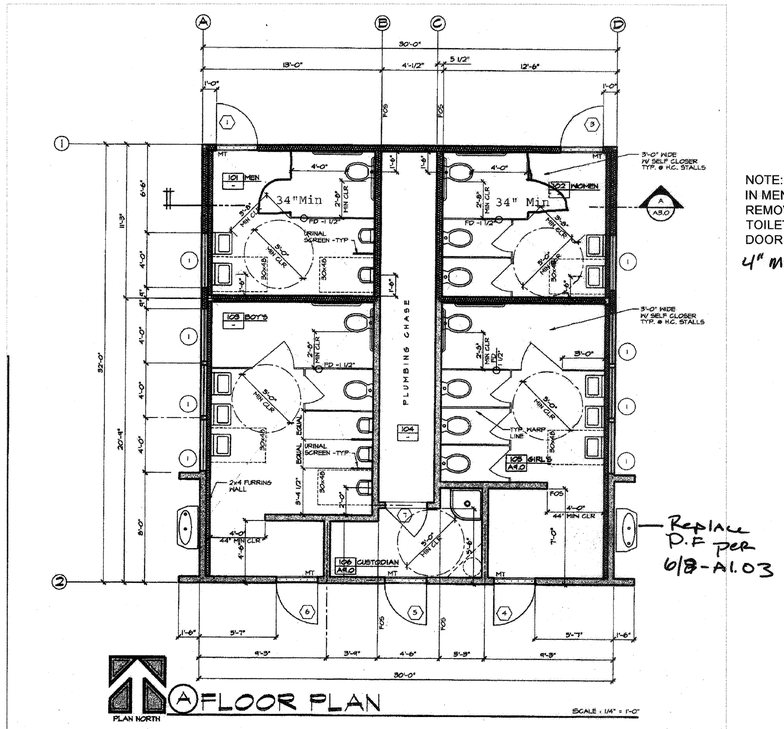

NOTE:
IN MENS 101 AND WOMENS 102 REMOVE FRONT OF EXISTING TOILET PARTITIONS AND ROTATE DOOR SWING AS INDICATED.
4" MAX SHIM

15 / A1.03

SCALE: N.T.S.

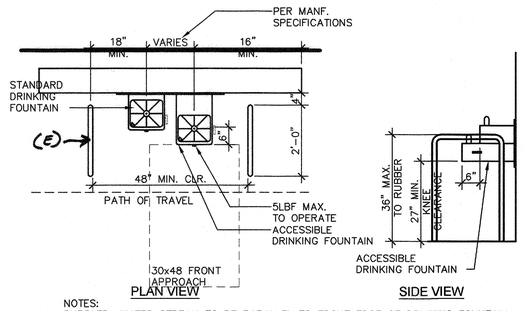

NOTES:
BUBBLER: WATER STREAM TO BE PARALLEL TO FRONT EDGE OF DRINKING FOUNTAIN.
SPOUT: 4" HIGH WATER FLOW FOR INSERTION OF CUP OR GLASS
ELKAY EDFPVR217C OR SIMILAR

6 / A1.03 HI LOW DRINKING FOUNTAIN

ADA000-01 SCALE: 1/2" = 1'-0"

NOTES:
1. DOOR SIGNS TO BE CONSTRUCTED FROM 1/4" THICK PLASTIC OR HEAT STAMPED FIGURES. COLORS TO BE SELECTED BY ARCHITECT.
2. ATTACH SIGNS USING FOUR (4) FLATHEAD, STAINLESS STEEL, TAMPER PROOF SCREWS, (COUNTERSUNK,) AND ADHESIVE.
3. 70% CONTRAST BETWEEN CHARACTERS AND BACKGROUND

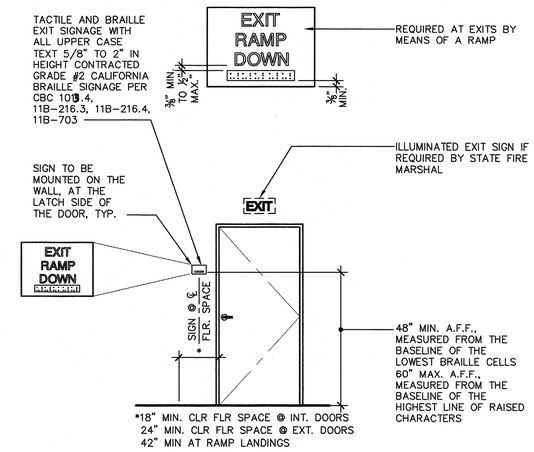

2 / A1.03 TYPICAL EXTERIOR DOOR SIGNAGE

ADX200-01 SCALE: 3/8" = 1'-0"

NOTES:
1. DOOR SIGNS TO BE CONSTRUCTED FROM 1/4" THICK PLASTIC OR HEAT STAMPED FIGURES. COLORS TO BE SELECTED BY ARCHITECT.
2. ATTACH SIGNS USING FOUR (4) FLATHEAD, STAINLESS STEEL, TAMPER PROOF SCREWS (COUNTERSUNK) AND ADHESIVE.
3. 70% CONTRAST BETWEEN CHARACTERS AND BACKGROUND PER CBC 11B-703.5.1.
4. ISA SYMBOL CAN ALSO BE PLACED ON DOOR. THE LOCATION IS NOT REGULATED.

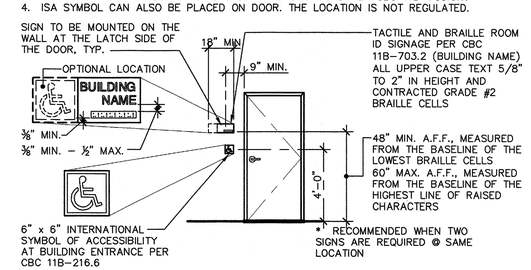

3 / A1.03 BUILDING ENTRANCE/I.S.A. SIGNAGE

ADA100-01 SCALE: 1/4" = 1'-0"

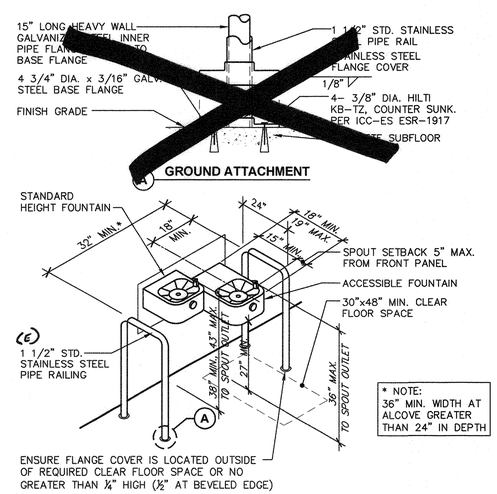

8 / A1.03 DRINKING FOUNTAIN

ADA000-02 SCALE: 1' = 1'-0"

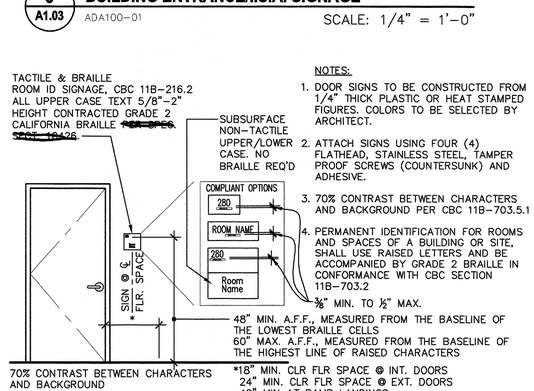

NOTES:
1. DOOR SIGNS TO BE CONSTRUCTED FROM 1/4" THICK PLASTIC OR HEAT STAMPED FIGURES. COLORS TO BE SELECTED BY ARCHITECT.
2. ATTACH SIGNS USING FOUR (4) FLATHEAD, STAINLESS STEEL, TAMPER PROOF SCREWS (COUNTERSUNK) AND ADHESIVE.
3. 70% CONTRAST BETWEEN CHARACTERS AND BACKGROUND PER CBC 11B-703.5.1
4. PERMANENT IDENTIFICATION FOR ROOMS AND SPACES OF A BUILDING OR SITE, SHALL USE RAISED LETTERS AND BE ACCOMPANIED BY GRADE 2 BRAILLE IN CONFORMANCE WITH CBC SECTION 11B-703.2

3/8" MIN. TO 1/2" MAX.

4 / A1.03 ROOM ID SIGNAGE

ADX100-01 SCALE: NO SCALE

Ownership of Documents
This document, the ideas and designs incorporated herein, as an instrument of Professional Service is the property of Integrated Designs by SOMAM Inc. and is not to be used, in whole or in part for any other project without written authorization.
© COPYRIGHT 2017

integrated designs by SOMAM, Inc.
ARCHITECTURE · ENGINEERING · INTERIOR DESIGN · CONSTRUCTION MANAGEMENT
6011 N. Fresno, Suite 130 – Fresno, California 93710
Phone (559) 438-0881 Fax (559) 438-0887 E-Mail: design@somam.com
www.integratedsdesigns.com

Revision:	Revision Description:	Rev. Date:	Revision:	Revision Description:	Rev. Date:	Revision:	Revision Description:	Rev. Date:

Sheet Title: DETAILS

Project Name & Address:
FREMONT ELEMENTARY
PARKING LOT AND OFFICE PORTABLE
BAKERSFIELD CITY SCHOOL DISTRICT
607 TEXAS ST BAKERSFIELD, CA.

Issue Date:	Date:	Designer:	DR:	PC:
07/30/17	11/02/17	--	--	RJD

Agency Approval Stamp:
FILE #: 15-6
IDENTIFICATION STAMP
DIV. OF THE STATE ARCHITECT
OFFICE OF REGULATION SERVICES
03-118270
AC MF FLS SS CL
DATE NOV - 8 2017
TRACKING #: 63221-290

Stamp(s):

LICENSED ARCHITECT CURTIS E. LYNN No. C 28966 Exp. 12-31-19 STATE OF CALIFORNIA

Job No.: 5269

Sheet No.: A1.03

Release: 1

G:\2017frs\17-5269 Fremont Elementary Office and Parking Lot\Sheets\A1.03 DETAILS.dwg RICHARD DELLANINI

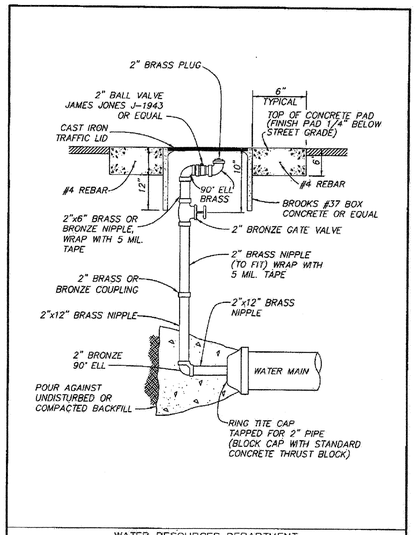

WATER RESOURCES DEPARTMENT
CITY OF BAKERSFIELD, CALIFORNIA

BLOWOFF ASSEMBLY – PAVED AREA

APPROVED: MANAGER – WATER RESOURCES DEPARTMENT April 27, 2009 DATE — PLATE No. W-4 REV. 1-9-09

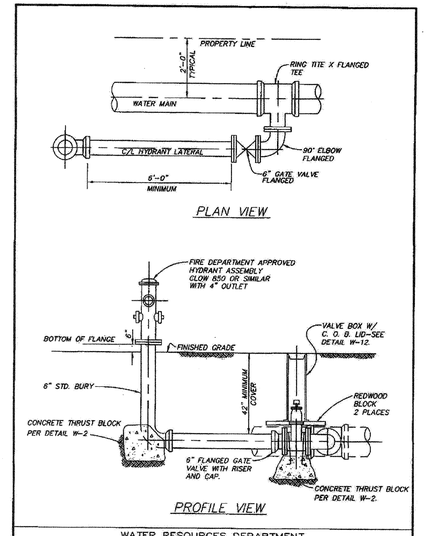

WATER RESOURCES DEPARTMENT
CITY OF BAKERSFIELD, CALIFORNIA

FIRE HYDRANT ASSEMBLY

APPROVED: MANAGER – WATER RESOURCES DEPARTMENT April 27, 2009 DATE — PLATE No. W-3 REV. 1-9-09

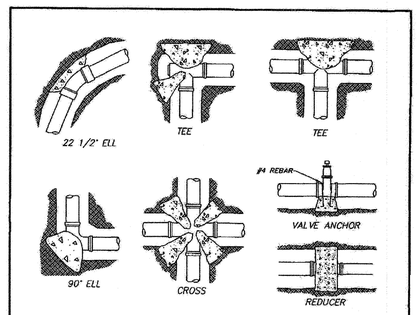

THRUST BLOCK SCHEDULE

PIPE SIZE	TEE OR PLUG	90°ELL	45°ELL	22 1/2° ELL	CROSS	VALVE
	BEARING AREA IN SQUARE FEET					
6"	3	4	2	2	1.5 EA.	3.0
8"	5	7	4	3	3.0 EA.	5.5
10"	8	11	6	3	4.5 EA.	9.0
12"	11	18	8	4	6.5 EA.	13.0
16"	16	23	13	7	8.0 EA.	16.0

NOTES:

1) ALL VALVES, FITTINGS, AND DIRECTIONAL CHANGES ARE TO BE HELD IN PLACE BY CONCRETE THRUSTS BLOCKS.
2) BEARING AREAS INDICATED ARE BASED ON ALLOWABLE SOIL PRESSURE OF 1500 PSF.
3) CONCRETE IS NOT TO BEAR AGAINST PIPE. THRUST BLOCK TO ONLY BE IN CONTACT WITH FITTING.
4) THRUST BLOCKS SHALL BE POURED AGAINST UNDISTURBED SOIL.
5) JOINTS SHALL BE KEPT CLEAR OF CONCRETE.

WATER RESOURCES DEPARTMENT
CITY OF BAKERSFIELD, CALIFORNIA

THRUST BLOCK DETAIL

APPROVED: MANAGER – WATER RESOURCES DEPARTMENT April 27, 2009 DATE — PLATE No. W-2 REV. 1-9-09

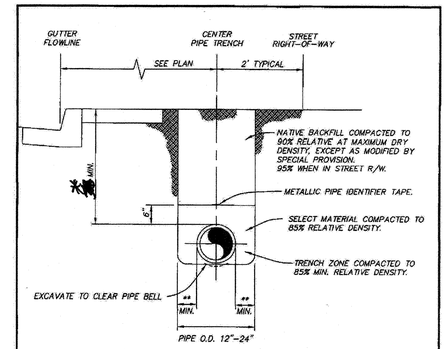

* 42" MINIMUM FOR 12" DIAMETER MAINS & SMALLER
48" MINIMUM FOR LARGER THAN 12" DIAMETER PIPE

**6" MINIMUM FOR MAINS LESS THAN 12" DIAMETER
12" MINIMUM FOR MAINS 12" DIAMETER AND GREATER

NOTES:

1) WATER MAIN SHALL BE LOCATED 2' FROM RIGHT-OF-WAY WHEN POSSIBLE.
2) IN PAVED AREA MINIMUM COVER SHALL BE MEASURED FROM LOWEST GUTTER FLOWLINE GRADE.
3) IN PAVED AREAS, SPECIFICATIONS FOR STREET STRUCTURAL SECTION, OR PAVEMENT PATCHING SPECIFICATION SHALL SUPERCEDE BACKFILL AND COMPACTION STATED.
4) SPRING LINE TESTS REQUIRED ON 12" & LARGER PIPE DIAMETER.

WATER RESOURCES DEPARTMENT
CITY OF BAKERSFIELD, CALIFORNIA

STANDARD PIPE TRENCH

APPROVED: MANAGER – WATER RESOURCES DEPARTMENT 8/1/2011 DATE — PLATE No. W-1 REV. 1-27-11

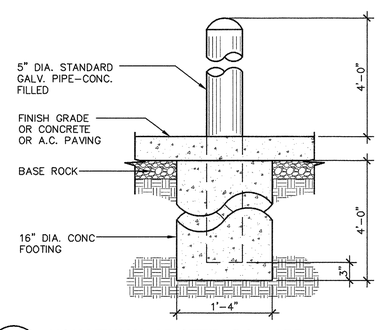

1 / A1.04 **NON-VEHICULAR STEEL BOLLARD**
ADS100-33

SCALE: 1" = 1'-0"

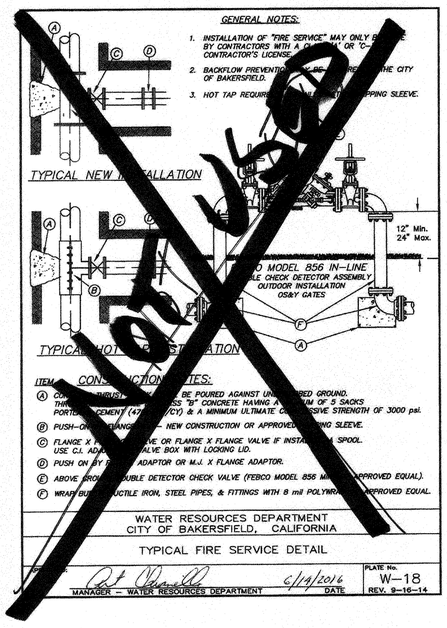

WATER RESOURCES DEPARTMENT
CITY OF BAKERSFIELD, CALIFORNIA

TYPICAL FIRE SERVICE DETAIL

APPROVED: MANAGER – WATER RESOURCES DEPARTMENT 6/14/2016 DATE — PLATE No. W-18 REV. 9-16-14

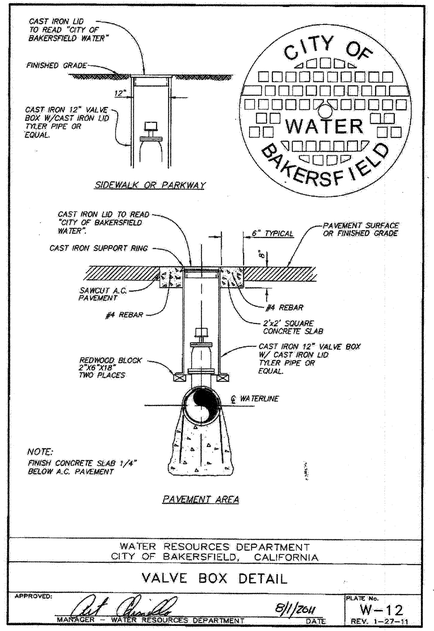

WATER RESOURCES DEPARTMENT
CITY OF BAKERSFIELD, CALIFORNIA

VALVE BOX DETAIL

APPROVED: MANAGER – WATER RESOURCES DEPARTMENT 8/1/2011 DATE — PLATE No. W-12 REV. 1-27-11

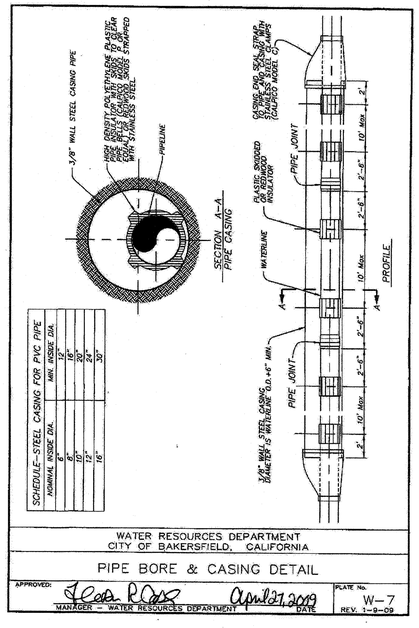

WATER RESOURCES DEPARTMENT
CITY OF BAKERSFIELD, CALIFORNIA

PIPE BORE & CASING DETAIL

APPROVED: MANAGER – WATER RESOURCES DEPARTMENT April 27, 2009 DATE — PLATE No. W-7 REV. 1-9-09

Ownership of Documents
This document, the ideas and designs incorporated herein, as an instrument of Professional Service is the property of Integrated Designs by SOMAM Inc. and is not to be used, in whole or in part for any other project without written authorization.
© COPYRIGHT 2017

integrated designs by SOMAM, Inc.
ARCHITECTURE · ENGINEERING · INTERIOR DESIGN · CONSTRUCTION MANAGEMENT
6011 N. Fresno, Suite 130 – Fresno, California 93710
Phone (559) 436-0881 Fax (559) 436-0887 E-Mail: design@somam.com
www.integratddesigns.com

Revision:	Revision Description:	Rev. Date:	Revision:	Revision Description:	Rev. Date:

Sheet Title: DETAILS

Project Name & Address:
FREMONT ELEMENTARY PARKING LOT AND OFFICE PORTABLE
BAKERSFIELD CITY SCHOOL DISTRICT
607 TEXAS ST BAKERSFIELD, CA.

Issue Date:	Date:	Designer:	DR:	PC:
07/30/17	10/10/17	--	--	RJD

Agency Approval Stamp:

FILE #: 15-6
IDENTIFICATION STAMP
DIV. OF THE STATE ARCHITECT
OFFICE OF REGULATION SERVICES
03-118270
AC FLS FLSS OC
DATE NOV 3 0 2017
TRACKING #: 63221-290

Stamp(s):

LICENSED ARCHITECT CURTIS E. FLYNN No. C 28956 STATE OF CALIFORNIA

Job No.: **5269**

Sheet No.: **A1.04**

Release: -

G:\2017frs\17-5269 Fremont Elementary Office and Parking Lot\Sheets\A1.04 DETAILS.dwg RICHARD DELLANINI

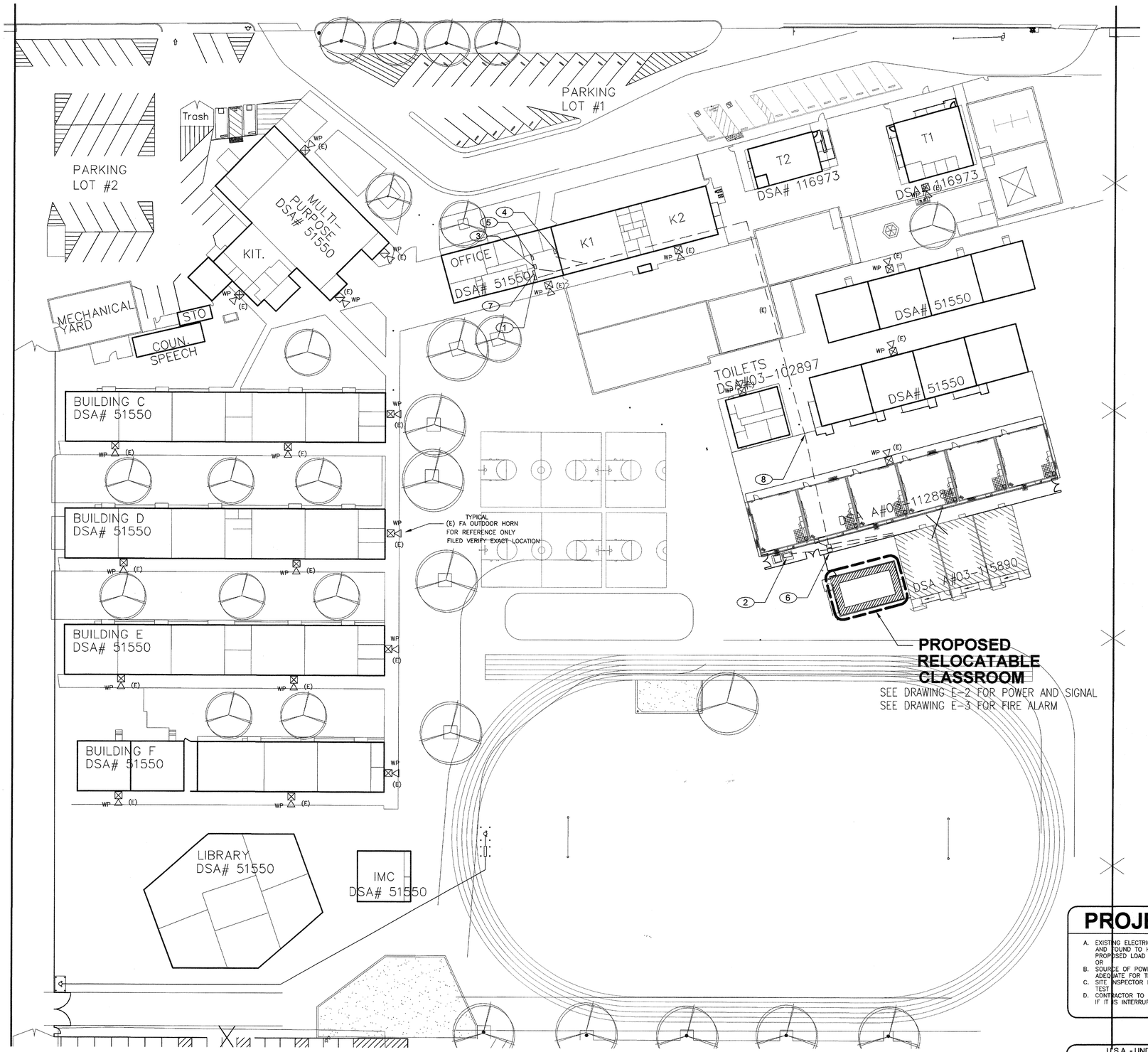

SITE PLAN - ELECTRICAL

SCALE : 1" = 30' – 0"

SHEET NOTES

1. APPROXIMATE LOCATION FOR EXISTING ADDRESSABLE FIRE ALARM CONTROL PANEL TO REMAIN IN SERVICE. DSA#03-112884. PROVIDE CONNECTION TO NEW FIRE ALARM DEVICES PER PLANS, UPDATE NEW FIRE ZONE MAP AND PROGRAM NEW DEVICES INFORMATION, MEASURE ACTUAL LOAD CURRENT AND VOLTAGE DROP FOR EACH NAC SIGNAL CIRCUITS, AND FACP STANDBY CURRENT AND ALARM CURRENT. SEND THE REPORT TO OWNER AND ENGINEER FOR REVIEW, AND PLASTIC LAMINATED ONE COPY INSIDE FACP CABINET DOOR.
2. APPROXIMATE LOCATION FOR EXISTING DISTRIBUTION PANEL H. PROVIDE NEW BREAKERS, FEEDERS AND POWER CONNECTION FOR NEW RELOCATABLE CLASSROOM BUILDINGS PER PLANS. SEE SINGLE LINE DIAGRAM 1/E-4.
3. APPROXIMATE LOCATION FOR EXISTING PA/C EQUIPMENT IN ADMIN OFFICE. PROVIDE NEW CABLE AND CONNECTION FOR NEW SIGNAL DEVICES PER PLANS.
4. APPROXIMATE LOCATION FOR EXISTING DATA MDF SERVER EQUIPMENT IN ADMIN OFFICE. PROVIDE NEW CABLE AND CONNECTION FOR NEW SIGNAL DEVICES PER PLANS.
5. APPROXIMATE LOCATION FOR EXISTING MASTER INTRUSION ALARM EQUIPMENT IN ADMIN OFFICE. PROVIDE NEW CABLE AND CONNECTION FOR NEW SIGNAL DEVICES PER PLANS.
6. (E) SIGNAL AND POWER PULL BOXES. EXTEND NEW U.G CONDUITS AND WIRING TO NEW BUILDING PER PLANS. SEE RISER DIAGRAMS.
7. EXISTING FIRE ALARM DIGITAL VOICE COMMAND CENTER AND INTER CONNECT TO EXISTING FIRE ALARM CONTROL PANEL. SURFACE MOUNT NEXT TO (E) FACE. FIELD VERIFY EXACT LOCATION. SEE FA DRAWING E-3 RISER DIAGRAM.
8. APPROXIMATE LOCATION AND ROUTING FOR EXISTING SIGNAL CONDUITS. FOR REFERENCE ONLY. PULL IN NEW CABLES PER PLANS. SEE RISER DIAGRAMS ON DRAWING E-4. CONTRACTOR SHOULD INCLUDE ALLOWANCE IN HIS BID PROPOSAL TO FIELD VERIFY EXACT LOCATION AND REQUIREMENT PER PLANS.

— (E) — INDICATE EXISTING CONDUIT AND WIRING. FOR REFERENCE ONLY, FIELD VERIFY AS REQUIRED.

MEP COMPONENT ANCHORAGE NOTES

ALL MECHANICAL, PLUMBING, AND ELECTRICAL COMPONENTS SHALL BE ANCHORED AND INSTALLED PER THE DETAILS ON THE DSA APPROVED CONSTRUCTION DOCUMENTS. WHERE NO DETAILS IS INDICATED, THE FOLLOWING COMPONENTS SHALL BE ANCHORED OR BRACED TO MEET THE FORCE AND DISPLACEMENT REQUIREMENTS PRESCRIBED IN THE 2016 CBC, SECTIONS 1616A.1.18 THROUGH 1616A. 1.26 AND ASCE 7-10 CHAPTER 13, 26 AND 30.

1. ALL PERMANENT EQUIPMENT AND COMPONENTS.
2. TEMPORARY OR MOVABLE EQUIPMENT THAT IS PERMANENTLY ATTACHED (E.G. HARD WIRED) TO THE BUILDING UTILITY SERVICES SUCH AS ELECTRICITY, GAS OR WATER.
3. MOVABLE EQUIPMENT WHICH IS STATIONED IN ONE PLACE FOR MORE THAN 8 HOURS AND HEAVIER THAN 400 POUNDS ARE REQUIRED TO BE ANCHORED WITH TEMPORARY ATTACHMENTS.

THE ATTACHMENT OF THE FOLLOWING MECHANICAL AND ELECTRICAL COMPONENTS SHALL BE POSITIVELY ATTACHED TO THE STRUCTURE, BUT NEED NOT BE DETAILED ON THE PLANS. THESE COMPONENTS SHALL HAVE FLEXIBLE CONNECTIONS PROVIDED BETWEEN THE COMPONENT AND ASSOCIATED DUCTWORK, PIPING, AND CONDUIT.

A. COMPONENTS WEIGHING LESS THAN 400 POUNDS AND HAVE A CENTER OF MASS LOCATED 4 FEET OR LESS ABOVE THE ADJACENT FLOOR OR ROOF LEVEL THAT DIRECTLY SUPPORT THE COMPONENT.
B. COMPONENTS WEIGHTING LESS THAN 20 POUNDS, OR IN THE CASE OF DISTRIBUTED SYSTEMS, LESS THAN 5 POUNDS PER FOOT, WHICH ARE SUSPENDED FROM A ROOF OR FLOOR OR HUNG FROM A WALL.

FOR THOSE ELEMENTS THAT DO NOT REQUIRE DETAILS ON THE APPROVED DRAWINGS, THE INSTALLATION SHALL BE SUBJECT TO THE APPROVAL OF THE STRUCTURAL ENGINEER OF RECORD AND THE DSA DISTRICT STRUCTURAL ENGINEER. THE PROJECT INSPECTOR WILL VERIFY THAT ALL COMPONENTS AND EQUIPMENT HAVE BEEN ANCHORED IN ACCORDANCE WITH ABOVE REQUIREMENTS.

PIPING, DUCTWORK, AND ELECTRICAL DISTRIBUTION SYSTEM BRACING NOTE

PIPING DUCTWORK, AND ELECTRICAL DISTRIBUTION SYSTEMS SHALL BE BRACED TO COMPLY WITH THE FORCES AND DISPLACEMENTS PRESCRIBED IN ASCE 7-10 SECTION 13.3 AS DEFINED IN ASCE 7-10 SECTION 12.6.8, 13.6.5.6 AND 2016 CBC, SECTION 1616A.1.23, 1616A.1.24, 1616A.1.25 AND 1616A.1.26.

THE METHOD OF SHOWING BRACING AND ATTACHMENTS TO THE STRUCTURE FOR THE IDENTIFIED DISTRIBUTION SYSTEM ARE AS NOTED BELOW. WHEN BRACING AND ATTACHMENT ARE BASED ON A PREAPPROVED INSTALLATION GUIDE (E.G., SMACNA OR OSHPD OPM), COPIES OF THE BRACING SYSTEM INSTALLATION GUIDE OR MANUAL SHALL BE AVAILABLE ON THE JOBSITE PRIOR TO THE START OF AND DURING THE HANGING AND BRACING OF THE DISTRIBUTION SYSTEMS. THE STRUCTURAL ENGINEER OF RECORD SHALL VERIFY THE ADEQUACY OF THE STRUCTURE TO SUPPORT THE HANGER AND BRACE LOADS.

MECHANICAL PIPING (MP), MECHANICAL DUCTS (MD), PLUMBING PIPING (PP), ELECTRICAL DISTRIBUTION SYSTEM (E):

MP☐ MD☐ PP☐ E☑ – OPTION 1: DETAILED ON THE APPROVED DRAWINGS WITH PROJECT SPECIFIC NOTES AND DETAILS.

MP☐ MD☐ PP☐ E☐ – OPTION 2: SHALL COMPLY WITH THE APPLICABLE OSHPD PRE-APPROVAL (OPM #) #_____.

MP☐ MD☐ PP☐ – OPTION 3: SHALL COMPLY WITH SMACNA SEISMIC RESTRAINT MANUAL, OSHPD EDITION (2009), INCLUDING ANY ADDENDA, FASTENERS AND ATTACHMENTS NOT SPECIFICALLY IDENTIFIED IN THE SMACNA SEISMIC RESTRAINT MANUAL, OSHPD EDITION, ARE DETAILED ON THE APPROVED DRAWINGS WITH PROJECT SPECIFIC NOTES AND DETAILS. THE DETAILS SHALL ACCOUNT FOR THE APPLICABLE SEISMIC HAZARD LEVEL _____ AND CONNECTION LEVEL _____ FOR THE PROJECT AND CONDITIONS.

PROJECT NOTES

A. EXISTING ELECTRICAL SERVICE HAS BEEN INVESTIGATE AND FOUND TO HAVE ADEQUATE CAPACITY FOR THE PROPOSED LOAD ADDITION AS SHOWN ON THESE PLANS OR
B. SOURCE OF POWER HAS BEEN INVESTIGATED AND IS ADEQUATE FOR THE ADDITIONAL LOAD.
C. SITE INSPECTOR IS TO WITNESS AND VERIFY GROUNDING TEST
D. CONTRACTOR TO MONITOR EXISTING FIRE ALARM SYSTEM IF IT IS INTERRUPTED OR DISCONNECTED.

U.S.A. - UNDERGROUND SERVICE ALERT
CALL BEFORE YOU DIG: 1-800-642-2444

THE LOCATION OF EXISTING UNDERGROUND UTILITIES WERE TAKEN FORM SOURCES BELIEVED TO BE RELIABLE; HOWEVER, THEY HAVE NOT BEEN INDEPENDENTLY VERIFIED BY THE OWNER OR THIS ENGINEER. THE CONTRACTORS SHALL DETERMINE THE EXACT LOCATION OF ALL EXISTING UTILITIES BEFORE COMMENCING WORK, AND AGREES TO BE FULLY RESPONSIBLE FOR ANY AND ALL DAMAGES WHICH MIGHT BE OCCASIONED BY THE CONTRACTOR'S FAILURE TO EXACTLY LOCATE AND PRESERVE ANY AND ALL UNDERGROUND UTILITIES.

NOTIFY OWNER 72 HOURS PRIOR TO ANY EXCAVATION

CODE RULES AND REGULATIONS

ALL WORK AND MATERIAL SHALL BE IN FULL ACCORDANCE WITH THE LATEST RULES AND REGULATIONS OF THE STATE FIRE MARSHAL, THE CALIFORNIA ELECTRICAL CODE, THE SAFETY ORDERS OF THE DIVISION OF INDUSTRIAL SAFETY AND OTHER APPLICABLE STATE LAWS OR REGULATIONS. NOTHING IN THESE PLANS OR SPECIFICATIONS IS TO BE CONSTRUED TO PERMIT WORK NOT CONFORMING TO THESE CODES.

DIVISION OF THE STATE ARCHITECT APPLICABLE CODES AND STANDARDS:

2016 CALIFORNIA ELECTRIC CODE (CEC).
2016 CALIFORNIA FIRE CODE (CFC).
2016 TITLE 19 (CCR), PUBLIC SAFETY, STATE FIRE MARSHAL REGULATIONS.
2016 NFPA 72 (CALIFORNIA AMENDED) – NATIONAL FIRE ALARM CODES. POLICY #95-03, FIRE AND LIFE SAFETY, DIVISION OF THE STATE ARCHITECT OFFICE OF REGULATION SERVICES.

CONSULTING ENGINEERS
JOHN CHONG ENGINEERING
1849 N HELM AVE #103 FRESNO CA 93727
(559) 925-9200 • FAX 251-9401
jcengineer@aol.com

REGISTERED PROFESSIONAL ENGINEER
JOHN S. CHONG
E 14419
Exp.6/30/2018
ELECTRICAL
STATE OF CALIFORNIA

Ownership of Documents
This document, the ideas and designs incorporated herein, as an instrument of Professional Service is the property of Integrated Designs by SOMAM Inc. and is not to be used, in whole or in part for any other project without written authorization.
© COPYRIGHT 2013

integrated designs by SOMAM, Inc.
ARCHITECTURE · ENGINEERING · INTERIOR DESIGN · CONSTRUCTION MANAGEMENT
6011 N. Fresno, Suite 130 – Fresno, California 93710
Phone (559) 435-0881 Fax (559) 435-0887 E-Mail: design@somam.com
www.integratedsdesigns.com

Revision:	Revision Description:	Rev. Date:

Sheet Title: SITE PLAN - ELECTRICAL

Project Name & Address:
FREMONT ELEMENTARY SCHOOL
1 RELOCATABLE CLASSROOM
BAKERSFIELD CITY SCHOOL DISTRICT
607 TEXAS STREET, BAKERSFIELD, CA

Issue Date:	Date:	Designer:	DR:	PC:
00/00/17	06/30/17	J CHONG	J CHONG	--

Agency Approval Stamp:

FILE #:
IDENTIFICATION STAMP
DIV. OF THE STATE ARCHITECT
OFFICE OF REGULATION SERVICES
03-118270
AC FLS SPH SS
DATE NOV - 8 2017
TRACKING #: DSA TRACKING NO.

Stamp(s):

Job No.: 5269

Sheet No.: E-1

Release:

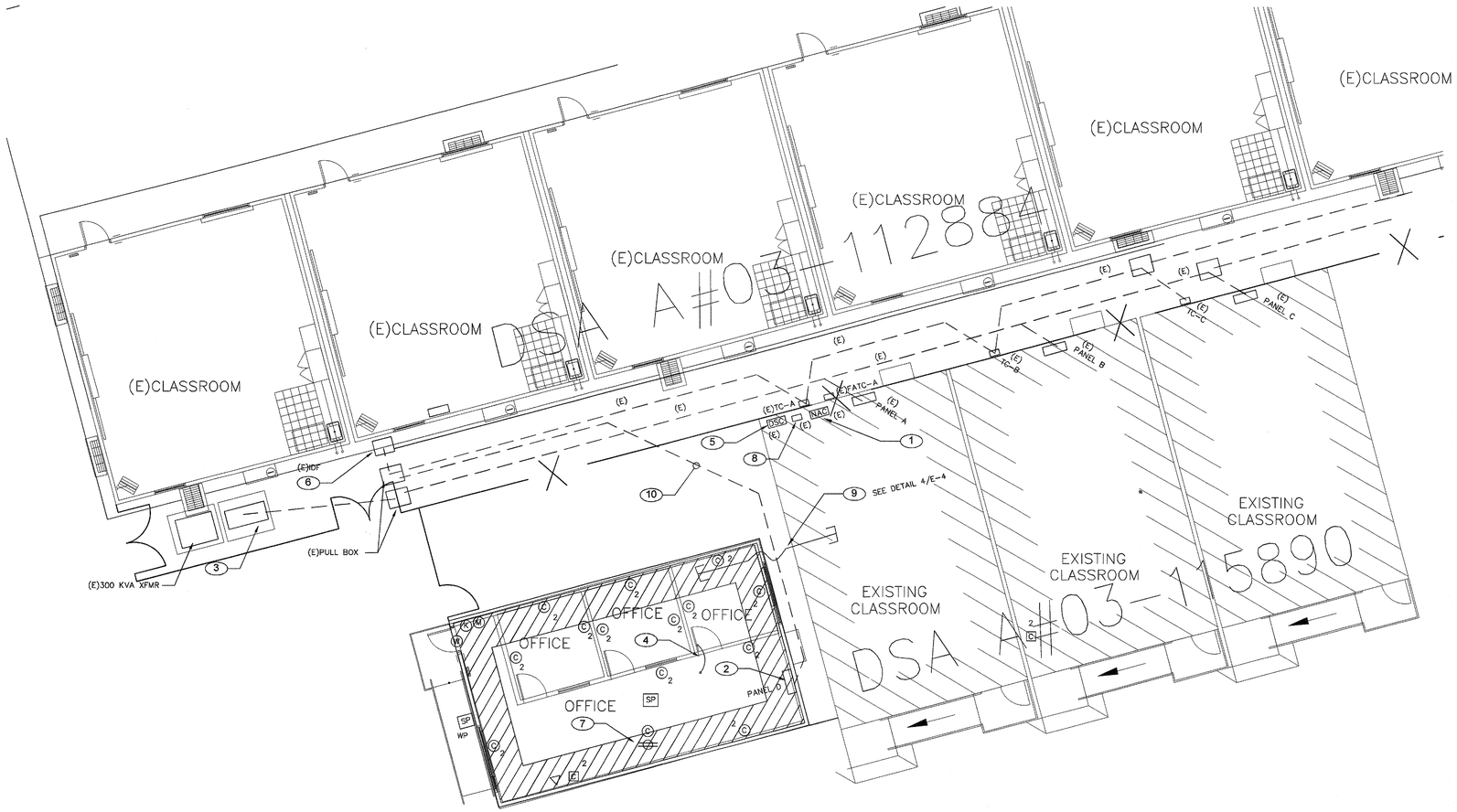

POWER AND SIGNAL PLAN

SCALE : 1/8" = 1' – 0"

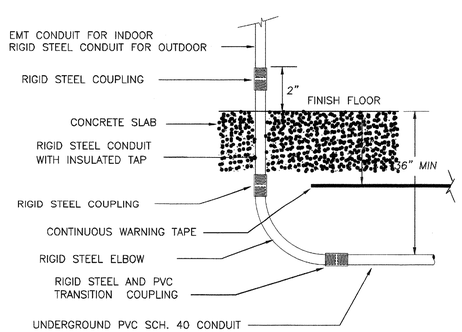

1 UNDERGROUND CONDUIT RISER DETAIL

N.T.S

EXISTING PANEL A SCHEDULE SHOWN FOR REFERENCE ONLY
SEE PC PLANS FOR ALL PANEL SCHEDULES.

PANEL A					120/240V 1ø 3W			CLASSROOM				FLUSH MOUNT	
					100 AMP MAIN BREAKER			SERIES 10K AIC				NEMA 1	
CKT	SERVING	NOTE	GND	AWG	AMP POLE	TOTAL LOAD KW øA	TOTAL LOAD KW øB	AMP POLE	AWG	GND	NOTE	SERVING	CKT
1	RECEPTACLES/CLOCK				20/1	0.3	1.5	60/2				4 TON AC	2
3	RECEPTACLES				20/1		0.2	1.5					4
5	INTERIOR LIGHT				20/1	0.2	1.5					SPACE	6
7	EXTERIOR LIGHT				20/1		1.7	1.5	20/1			IDF OUTLET	8
9	GFI RECEPTCLE				20/1	1.6	1.5		20/1			SECURITY ALARM PANEL	10
11	FIRE SPRINKLER SWITCH AND BELL				20/1		0.7	0.5	20/1		4	FIRE ALARM BOOSTER PANEL	12
						19KW	17KW						
						158A	142A						

NOTES:
1. *UPDATE CIRCUIT DIRECTORY INSIDE PANEL*
2. *PROVIDE ARC FLASH LABEL ON PANEL DOOR*
3. *PROVIDE MECHANICAL LOCK ON BREAKER*
4. *PROVIDE MECHANICAL LOCK ON BREAKER PER NFPA 72, 10.6.5.2: DEDICATED CIRCUIT, MECHANICALLY PROTECTED (LOCKOUT), RED MARKING, ACCESSIBLE ONLY TO AUTHORIZED PERSONNEL, ID'D AS FIRE ALARM, EMERGENCY COMMUNICATIONS OR FIRE ALARM/ECS. LOCATION OF CIRCUIT DISCONNECT (BREAKER) PERMANENTLY IDENTIFIED AT THE FIRE ALARM CONTROL UNIT.*

SHEET NOTES

1. APPROXIMATE LOCATION FOR EXISTING FIRE ALARM SIGNAL AND VOICE COMBO BOOSTER PANEL. (E) 110V DEDICATED CIRCUIT FROM PANEL A-12. SEE DRAWING E-3 FOR MORE INFORMATION.
2. PROVIDE POWER CONNECTION FOR RELOCATABLE BUILDING PRE-WIRED PANEL. SEE SINGLE LINE DIAGRAM ON DRAWING 1/E-4.
3. EXISTING 800A PANEL H, PROVIDE NEW CONDUITS AND FEEDERS FOR NEW PRE-WIRED PANEL POWER CONNECTION. SEE SINGLE LINE DIAGRAM.
4. PROVIDE #6 COPPER GROUNDING CONDUCTOR AND BOND TO EACH SECTION STRUCTURAL STEEL BEAM, FIELD VERIFY EXACT LOCATION WITH GENERAL CONTRACTOR PRIOR TO INSTALLATION.
5. EXISTING SECURITY ALARM PANEL AND SYSTEM AND INTERCONNECTION TO (E) MASTER EQUIPMENT IN ADMIN OFFICE. INSTALL NEW SECURITY DEVICES PER PLANS. SEE RISER DIAGRAM 5/E-4.
6. EXISTING OUTDOOR FEE STAND IDF CABINET. PROVIDE NEW DATA CABLES AND COMPUTER OUTLETS PER PLANS. FIELD VERIFY EXACT LOCATION AND REQUIREMENT WITH OWNER PRIOR TO INSTALLATION. SEE RISER DIAGRAM.
7. PROVIDE DATA AND POWER OUTLET AT CEILING FOR SMART BOARD. FIELD VERIFY EXACT LOCATION AND REQUIREMENT WITH OWNER PRIOR TO INSTALLATION. SEE RISER DIAGRAM.
8. EXISTING PROVIDE 50 PAIR PUNCH DOWN BLOCK AND SURFACE MOUNTED BELOW CEILING FOR INTERCOM / TELEPHONE WIRING TERMINATION. FIELD VERIFY LOCATION.
9. PROVIDE WP FLEX (1)2"C FOR SIGNAL AND (1)3/4"C FOR FA BETWEEN BUILDING ATTIC SPACE. CORE DRILL AND SEAL EXTERIOR WALL AS REQUIRED. SEE DETAIL 4/E-4. FIELD VERIFY LOCATION WITH OWNER AND GENERAL CONTRACTOR PRIOR TO INSTALLATION.
10. SAW CUT AND PATCH EXISTING AC PAVING TO INSTALL NEW UNDERGROUND POWER CONDUIT PER PLANS. PATCH AC PAVING TO MATCH EXISTING. SEE DETAIL 1/E-2.

SIGNAL AND COMM. LEGEND

SECURITY ALARM SYSTEM

- DSC — DIGITAL SECURITY ALARM CONTROL PANEL. MODEL SONITROL (64ZONE). INTERFACE WITH EXISTING BUILDING MASTER SECRITY ALARM PANEL AS REQUIRED.
- (K) — LCD KEYPAD – MATCH EXISTING EQUIPMENT AS REQUIRED.
- (M) — DUAL TECHNOLOGY CEILING MOUNT DETECTOR. MATCH EXISTING EQUIPMENT AS REQUIRED.
- (B) — EXTERIOR BELL (SIREN) – DSC#SD15W WITH WEATHERPROOF BACKBOX AND TAMPER SWITCH.
- (W) — DOOR CONTACT SWITCH. RECESS ABOVE DOOR JAMB AT OPEN SIDE.
- —B— INDOOR SECURITY ALARM CABLE. WEST PENN #241
- —B1— OUTDOOR SECURITY ALARM CABLE. WEST PENN #AOC224

COMMUNICATION (TELEPHONE/INTERCOM) SYSTEM

- ▽ — HANDSET/IP PHONE – FIELD VERIFY MODEL NO. AND MATCH EXISTING MASTER EQUIPMENT AS REQUIRED.
- SP — CEILING SPEAKER – RAULAND #US0221 W/ACC1401 BAFFLE. PROVIDE BACKBOX AND CEILING SUPPORT AS REQUIRED
- SP WP — OUTDOOR SPEAKER – ATLAS #APF15 HORN W/XFMR AND LOWELL (#CB84 FOR SURFACE, #F87SX FOR RECESS) BACK BOX W/SQLK GRILL
- —T— OUTDOOR TELE/IC CABLE. 22AWG SOILD COPPER 12 PAIR SHIELDED AND 12 PAIR UNSHIELDED CABLE.
- —T1— INDOOR TELEPHONE CABLE. CAT.3 22AWG SOILD COPPER 4UTP SHIELDED CABLE.
- —P1— OUTDOOR PA/IC CABLE – WEST PENN #AQC-369

DATA COMMUNICATION SYSTEM

- C 2 — DATA OUTLET – LEVITON CAT 5E (DUAL RECEPTACLE RED IN COLOR FOR ADMINISTRATIVE)
- © 2 — DATA OUTLET – LEVITON CAT 5E (DUAL RECEPTACLE BLUE IN COLOR FOR INSTRUCTIONAL)
- —FO— FIBER OPTIC CABLE VIA INNER DUCT WITH J-HOOK IN ATTIC AND 2"C FOR OUTDOOR. SEE RISER DIAGRAM FOR MODEL NO.
- —C1— (ONE) CAT 5E 22AWG 4UTP. SEE RISER DIAGRAM FOR MODEL NO.
- —C2— (TWO) CAT 5E 22AWG 4UTP. SEE RISER DIAGRAM FOR MODEL NO.

NOTES:
1. ALL SIGNAL CONDUCTORS CANNOT SPLICE INSIDE PULL BOX. CONDUCTOR MUST BE CONTINUE RUN BETWEEN SIGNAL DEVICES BACK BOX OR ABOVE GROUND TERMINAL CABINET.
2. IN CASE OF CONFLICT BETWEEN SIGNAL DEVICES CATALOG NUMBERS, DESCRIPTION SHALL PREVAIL.

CONSULTING ENGINEERS
JOHN CHONG ENGINEERING
1849 N HELM AVE #103 FRESNO CA 93727
(559) 325-3300 • FAX 251-5401
jceng1neer@aol.com

REGISTERED PROFESSIONAL ENGINEER
JOHN S. CHONG
E 14419
Exp.6/30/2018
ELECTRICAL
STATE OF CALIFORNIA

Ownership of Documents
This document, the ideas and designs incorporated herein, as an instrument of Professional Service is the property of Integrated Designs by SOMAM Inc. and is not to be used, in whole or in part for any other project without written authorization.
© COPYRIGHT 2013

integrated designs by SOMAM, Inc.
ARCHITECTURE · ENGINEERING · INTERIOR DESIGN · CONSTRUCTION MANAGEMENT
6011 N. Fresno, Suite 130 – Fresno, California 93710
Phone (559) 436-0881 Fax (559) 436-0887 E-Mail: design@somam.com
www.Integrateddesigns.com

Revision:	Revision Description:	Rev. Date:

Sheet Title: POWER AND SIGNAL PLAN

Project Name & Address: FREMONT ELEMENTARY SCHOOL
1 RELOCATABLE CLASSROOM
BAKERSFIELD CITY SCHOOL DISTRICT
607 TEXAS STREET, BAKERSFIELD, CA

Issue Date: 00/00/17
Date: 06/30/17
Designer: J CHONG
DR: J CHONG
PC: --

Agency Approval Stamp:
FILE #:
IDENTIFICATION STAMP
DIV. OF THE STATE ARCHITECT
OFFICE OF REGULATION SERVICES
03-118270
AC FLS CPLSS CC
DATE NOV -8 2017
TRACKING #: DSA TRACKING NO.

Stamp(s):

Job No.: 5269

Sheet No.: E-2

Release:

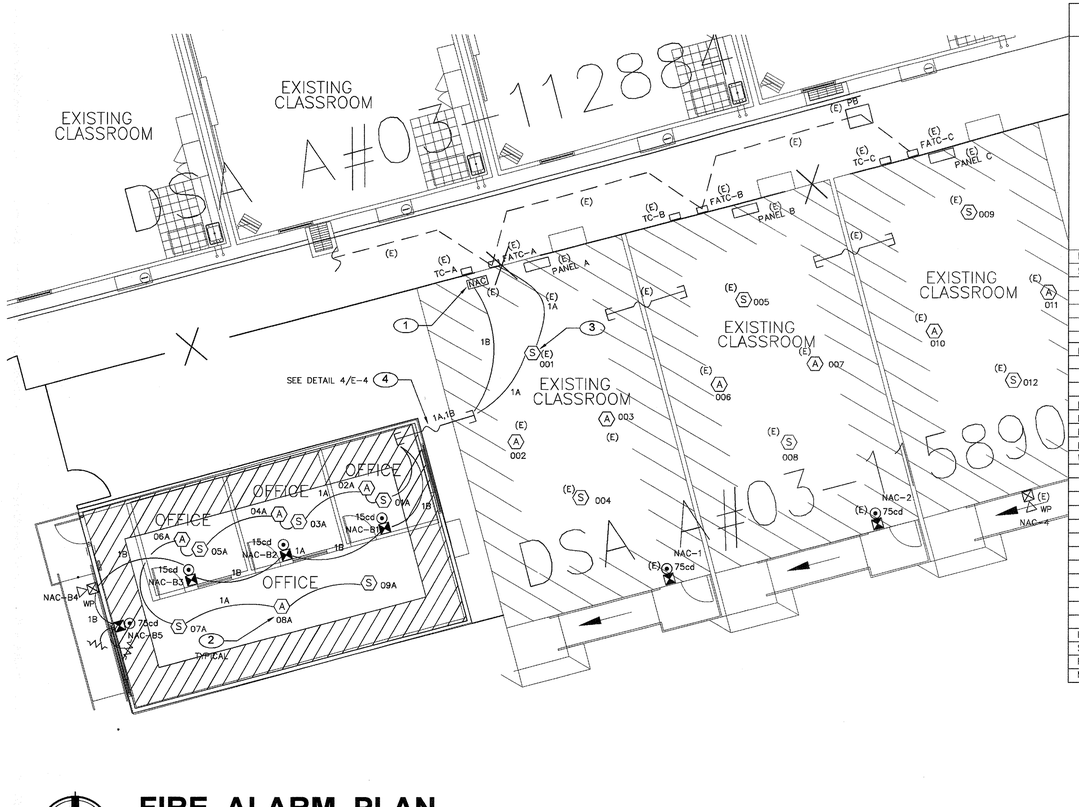

FIRE ALARM PLAN

SCALE : 1/8" = 1' – 0"

FIRE ALARM SEQUENCE OF OPERATIONS

	ACTIVATE ALARM FACP	ACTIVATE ALARM REMOTE ANNUNCIATOR	ACTIVATE TROUBLE SIGNAL AT FACP	ACTIVATE TROUBLE SIGNAL AT REMOTE ANNUNCIATOR	ACTIVATE SUPERVISORY SIGNAL AT FACP	ACTIVATE SUPERVISORY SIGNAL AT REMOTE ANNUNCIATOR	SEND SUPERVISORY SIGNAL OFF-SITE VIA COMMUNICATOR	SEND SUPERVISORY SIGNAL OFF-SITE VIA COMMUNICATOR	ACTIVATE AUDIBLE/VISUAL SIGNALS	ACTIVATE AUDIBLE/VISUAL SIGNALS	ACTIVATE WATER FLOW BELL	ACTIVATE SIGNAL BELL	SECONDARY FLOOR RECALL	ELEVATOR SHUNT TRIP	SHUTDOWN HVAC UNITS	SHUT FIRE/SMOKE DAMPERS	RELEASE DOORS	RESET HVAC INITIATING DEVICES	ACTIVATE BATTERY BACK-UP	DEACTIVATE AUDIBLE SIGNALS	DEACTIVATE AUDIBLE SIGNALS	RESET ALL DEVICES	SYSTEM NORMAL
MANUAL PULL STATION	X	X					X		X								X						
SMOKE DETECTORS:																							
ALL (EXCEPT LISTED BELOW)	X	X					X			X							X						
PRIMARY FLOOR LOBBY	X	X					X			X			X				X						
ALL OTHER LOBBIES	X	X					X			X		X					X						
ELEVATOR MACHINE ROOM	X	X					X			X			X				X						
ELEVATOR SHAFT	X						X			X		X					X						
HEAT DETECTORS:																							
ALL (EXCEPT LISTED BELOW)	X	X					X			X							X						
ELEVATOR MACHINE ROOM	X	X					X			X				X			X						
ELEVATOR SHAFT	X	X					X			X				X			X						
DUCT DETECTOR					X	X		X							X	X							
FIRE SPRINKLER WATERFLOW SWITCH	X	X					X			X	X						X						
FIRE SPRINKLER TAMPER SWITCH					X	X		X															
POST INDICATOR VALVE					X	X		X															
WIRING CONDITIONS:																							
SIGNALING LINE CIRCUIT (SLC)–																							
WIRE-TO-WIRE SHORT			X	X				X															
SINGLE OPEN			X	X				X															
SINGLE GROUND			X	X				X															
INITIATING DEVICE CIRCUIT (IDC)–																							
WIRE-TO-WIRE SHORT	X	X					X			X							X						
SINGLE OPEN			X	X				X															
SINGLE GROUND			X	X				X															
NOTIFICATION APPLIANCE CIRCUIT (NAC)–																							
WIRE-TO-WIRE SHORT			X	X																			
SINGLE OPEN			X	X																			
SINGLE GROUND			X	X																			
LOSS OF 120VAC POWER			X	X				X											X				
SIGNAL SILENCE																				X	X		
RESET FACP																	X		X	X	X	X	

NOTE: SOME SEQUENCE OF OPERATIONS SHOWN MAY NOT APPLY

FA CABLE SCHEDULE

TYPE	DESCRIPTION
A	INITIALING CIRCUIT CABLE 2#16 AWG SOLID COPPER PVC JACKET POWER LIMITED FPLR CABLE, FOR INDOOR AND OUTDOOR VIA MIN. 3/4" CONDUIT INSTALLATION
B	NAC SIGNAL CIRCUIT CABLE 2#12 AWG SOLID COPPER PVC JACKET POWER LIMITED FPLR CABLE, AND SPEAKER CIRCUIT CABLE 2#16 SHIELDED COPPER PVC JACKET POWER LIMITED FPLR CABLE FOR INDOOR AND OUTDOOR VIA MIN. 3/4" CONDUIT INSTALLATION

BATTERY POWER CALCULATIONS

1 EXISTING NAC SIGNAL & VOICE BOOSTER PANEL

DEVICE	NO. OF DEVICE	CURRENT PER DEVICE STANDBY	CURRENT PER DEVICE ALARM	STANDBY CURRENT	ALARM CURRENT
UNIT	1	0.120A	9A	0.120A	9A
EXISTING OUTDOOR SPEAKER	1	--	0.050A	--	0.050A
NEW OUTDOOR SPEAKER	1	--	0.050A	--	0.050A
NEW AUDIO/VISUAL 15cd	3	--	0.093A	--	0.279A
EXISTING AUDIO/VISUAL 75cd	3	--	0.157A	--	0.471A
NEW AUDIO/VISUAL 75cd	1	--	0.157A	--	0.157A
EXISTING 1/4 W SPEAKER	3	--	0.010A	--	0.030A
NEW 1/4 W SPEAKER	4	--	0.010A	--	0.040A
		SUB-TOTAL		0.120A	10.077A

24 HOUR STANDBY CURRENT	2.880AH
5 MINUTE ALARM CURRENT (0.083 HR)	2.519AH
SUBTOTAL ----------	5.399AH
20% SAFETY FACTOR ----------	1.080AH
TOTAL AMPS-HRS REQUIRED	6.479AH

REPLACE EXISTING BATTERY WITH (2) NEW 12AH BATTERY

DURING THE FINAL TESTING, MEASURE EXACT STANDBY AND ALARM CURRENT, VOLTAGE DROP FOR EACH SIGNAL CIRCUITS. SEND OWNER AND ENGINEER ONE COPY RECORD FOR REVIEW, AND PLASTIC LAMINATED ONE COPY INSIDE CABINET DOOR.

BATTERY POWER CALCULATIONS

2 EXISTING FIRE ALARM CONTROL PANEL (FACP) IN EXISTING ADMIN BUILDING

DEVICE	NO. OF DEVICE	CURRENT PER DEVICE STANDBY	CURRENT PER DEVICE LED	STANDBY CURRENT	LED CURRENT
EXISTING ESTIMATE LOAD	1			0.25A	4.5A
NEW SMOKE DETECTOR	5	0.0003A	0.0065A	0.0015A	0.0325A
NEW HEAT DETECTOR	4	0.0003A	0.0065A	0.0012A	0.026A
		SUB-TOTAL		0.2527A	4.559A

24 HOUR STANDBY CURRENT	6.065AH
15 MINUTE LED CURRENT (0.25 HR)	1.140AH
SUBTOTAL ----------	7.205AH
20% SAFETY FACTOR ----------	1.441AH
TOTAL NEW AMPS-HRS REQUIRED	8.646AH

REPLACE EXISTING BATTERIES WITH (2) NEW 18AH BATTERIES

BATTERY POWER CALCULATIONS

3 EXISTING AUDIO AMPLIFIER NOTIFIER#DVC IN EXISTING ADMIN BUILDING

DEVICE	NO. OF DEVICE	CURRENT PER DEVICE STANDBY	CURRENT PER DEVICE ALARM	STANDBY CURRENT	ALARM CURRENT
EXISTING UNIT	1	0.130A	1.000A	0.130A	1.000A
(E) BOOSTER PNL	1	0.130A	1.000A	0.130A	1.000A
		SUB-TOTAL		0.260A	2.000A

24 HOUR STANDBY CURRENT	6.240AH
15 MINUTE ALARM CURRENT (0.25 HR)	0.500AH
SUBTOTAL ----------	6.740AH
20% SAFETY FACTOR ----------	1.348AH
TOTAL NEW AMPS-HRS REQUIRED	8.088AH

REPLACE EXISTING BATTERY WITH (2) NEW 12AH BATTERIES

VOLTAGE DROP CALCULATION

WORST CASE VOLTAGE DROP AT THE LAST DEVICE

VD = VOLTAGE DROP
I = TOTAL LOAD
K = 21.6
L = DISTANCE TO THE LOAD
CM = CIRCULAR MILLS (CROOS SECTION OF 12 AWG = 6530)
V = VOLTAGE (24vdc)

$$VD = \frac{K * I * 2L}{CM}$$

SIGNAL CKT NO.	AMPERES	APPROX LENGTH	RESISTIVITY OHM	WIRE AWG	AREA CM	VOLTS DROPPED	% VOLTS DROP
CKT.# B STROBE	0.486A	280'	21.6	12	6530	0.450V	1.9%
CKT.# B SPEAKER	0.050A	280'	21.6	12	6530	0.046V	0.2%

F.A. MONITORING NOTES

1. THE AUTOMATIC FIRE ALARM SYSTEMS SHALL TRANSMIT THE ALARM, SUPERVISORY AND TROUBLE SIGNALS TO AN APPROVED SUPERVISING STATION AS REQUIRED BY NFPA 72 AND AMENDED EITHER UUFX OR UUJS BY UNDERWRITERS OF FACTORY MUTUAL RESEARCH APPROVAL STANDARD 3011. SUPERVISION OF SYSTEM AND LEASED TELEPHONE LINES SHALL BY ARRANGED BY OWNER.

COMPLETE AUTOMATIC FIRE ALARM PLAN SUBMITTAL

1. THE FIRE ALARM SYSTEM SHOWN ON THESE PLANS HAS BEEN SUBMITTED AND APPROVED BY DIVISION OF THE STATE ARCHITECT. ANY SUBSTITUTION OF THE FIRE ALARM SYSTEM SHALL BE RESUBMITTED TO THE ARCHITECT FOR REVIEW AND APPROVAL. THE CONTRACTOR SHALL PAY ANY ADDITIONAL FEES THAT ARE INCURRED DUE TO THIS SUBSTITUTION.
2. THE AUTOMATIC FIRE ALARM SYSTEM SHALL COVER ALL ROOMS AND AREAS AND UPON ACTIVATION OF AN INITIATING DEVICE ALERT ALL OCCUPANTS AND TRANSMIT THE ALARM, SUPERVISORY, AND TROUBLE SIGNALS TO AN APPROVED SUPERVISING STATION. (EXCEPTION: SMOKE DETECTORS ARE NOT REQUIRED IN NON-ACCESSIBLE AREAS AS DEFINED IN EMERGENCY EXPRESS TERMS OF PROPOSED S.F.M. AMENDMENTS TO 2016 C.F.C. SECTION 210 (C.F.C. SECTIONS 1006.2.4.2.2.1.1 AND 1006.2.4.2.2.1.5)

SHEET NOTES

1. EXISTING FIRE ALARM SIGNAL AND AUDIO BOOSTER PANEL AND CONNECT TO (E) FACP PER RISER DIAGRAM. (E) 110V POWER CONNECTION AND DEDICATED CIRCUIT FROM PANEL A-12. PROVIDE FIRE ZONE MAP. MEASURE ACTUAL LOAD CURRENT AND VOLTAGE DROP FOR EACH NAC SIGNAL CIRCUITS, AND STANDBY CURRENT AND ALARM CURRENT. SEND THE REPORT TO OWNER AND ENGINEER FOR REVIEW, AND PLASTIC LAMINATED ONE COPY INSIDE CABINET DOOR. SEE FA RISER DIAGRAM FOR DETAIL.
2. LOCATE HEAT DETECTOR IN ATTIC AND SURFACE MOUNT ON THE BOTTOM OF RAFTER. DETECTOR COVERAGE WILL BE DERATED 50% ACROSS THE RAFTER. FIELD VERIFY LOCATION WITH GENERAL CONTRACTOR AND PROVIDE ATTIC HEAT DETECTOR IN EACH BAY OF STRUCTURAL.
3. INTERCEPT EXISTING INITIATING CIRCUIT AND EXTEND TO NEW FA DEVICES PER PLANS.
4. NEW WP FLEX 3/4" CONDUIT AND FA WIRING BETWEEN BUILDING ATTIC SPACE. SEE DETAIL 4/E-4.

F.A SYSTEM SCOPE OF WORK

1. PROVIDE AUTOMATIC FIRE ALARM SYSTEM WITH VOICE EVACUATION SPEAKERS FOR THE NEW CLASSROOM BUILDINGS PER PLANS.
2. EXISTING FACP IS 24VDC ADDRESSABLE, AND CLASS B WIRING SYSTEM, AND WITH OFF SITE MONITORING SERVICE VIA AUTO DUAL LINE DIALER AND TELEPHONE LINES.
3. DURING THE FINAL TESTING, MEASURE ALL FIRE ALARM CURRENTS, VOLTAGE DROP FOR EACH SIGNAL CIRCUITS. SEND OWNER AND ENGINEER ONE COPY RECORD FOR REVIEW, AND PLASTIC LAMINATED ONE COPY INSIDE FACP CABINET DOOR.
4. COMPLETE FIRE ALARM DRAWING SUBMITTAL IS PROVIDED.

FIRE ALARM NOTES

1) APPLICABLE STANDARD 2016 NFPA 72
2) INSTALLATION OF THE SYSTEMS SHALL NOT BE STARTED UNTIL DETAILED DESIGN DOCUMENTS AND SPECIFICATION, INCLUDING STATE FIRE MARSHAL LISTING NUMBERS FOR EACH COMPONENT OF THE SYSTEM HAS BEEN APPROVED BY DSA.
3) COMPLETION OF THE INSTALLATION OF THE SYSTEMS, A SATISFACTORY TEST OF THE ENTIRE SYSTEM SHALL BE MADE IN THE PRESENCE OF A DSA PROJECT INSPECTOR.
4) A STAMPED SET OF APPROVED FIRE ALARM DESIGN DOCUMENTS SHALL BE ON THE JOB SITE AND USED FOR INSTALLATION.
5) ANY DISCREPANCIES BETWEEN THE DRAWINGS AND THE CODE OR RECOGNIZED STANDARDS SHALL BE BROUGHT TO THE ATTENTION OF DSA AND THE ARCHITECT/ENGINEER OF THE PROJECT.
6) DSA, ARCHITECT/ENGINEER AND OWNER SHALL BE NOTIFIED A MINIMUM OF 48 HOURS PRIOR TO THE FINAL INSPECTION AND /OR TESTING.
7) PENETRATIONS THROUGH RATED ASSEMBLIES, REQUIRING OPENING PROTECTION SHALL BE PROVIDED WITH A PENETRATION FIRE STOP SYSTEM AS IDENTIFIED IN CBC CHAPTER 7, UL OR OTHER LAB TESTING CRITERIA. APPROVED TYPE OF MATERIALS SHALL BE IDENTIFIED WITHIN THE SPECIFICATION WITHIN THE FIRE ALARM SECTION.
8) WALL MOUNTED VISUAL NOTIFICATION DEVICES SHALL HAVE THEIR BOTTOMS MOUNTED AT 80" MINIMUM AND 96" MAXIMUM FROM FINISHED FLOOR.
9) WALL MOUNTED AUDIBLE NOTIFICATION DEVICES SHALL HAVE THEIR TOPS MOUNTED AT 90" MINIMUM AND 100" MAXIMUM FROM FINISHED FLOOR AND NO CLOSER THEN 6" TO A HORIZONTAL STRUCTURE.
10) AUDIBLE DEVICES SHALL PROVIDE A SOUND PRESSURE LEVEL OF 15 DECIBELS (Dba) AVOVE THE AVERAGE AMBIENT SOUND LEVEL OR 5 Dba ABOVE THE MAXIMUM SOUND LEVEL HAVING A DURATION OF AT LEASE 60 SECONDS, WHICHEVER IS GREATER, IN EVERY OCCUPIAVLE SPACE WITHIN THE BUILDING.
11) AUDIBLE DEVICES SHALL BE SYNCHRONIZED TEMPORAL CODE 3 PATTERN.
12) THE CONTRACTOR SHALL ADJUST/INSTALL ALL DEVICES TO MAXIMIZE PERFORMANCE AND TO MINIMIZE FALSE ALARMS.
13) VISUAL DEVICES SHOULD NOT EXCEED 2 FLASHES PER SECOND AND SHOULD NOT BE SLOWER THAN 1 FLASH EVERY SECOND. THE DEVICE SHALL HAVE A PULSING LIGHT SOURCE NOT LESS THAN 15 CANDELLA. VISUAL DEVICES WITHIN 55" FROM EACH OTHER SHALL BE SYNCHRONIZED.
14) UNDERGROUND AND EXTERIOR CONDUITS TO HAVE WATERTIGHT FITTINGS AND WIRE TO BE APPROVAL FOR WET LOCATIONS.
15) ALL FIRE ALARM WIRING SHALL BE FLP OR FPLP (FIRE POWER LIMITED OR FIRE POWER LIMITED PLENUM) AS REQUIRED FOR APPLICATION. WIRING IN CONDUIT ABOVE GROUND MAY BE THHN OR THWN.
16) PER CEC STANDARDS, ALL WIRING IS TO BE PULLED THROUGH EACH JUNCTION BOX AND CONNECTED DIRECTLY TO EACH FIRE DEVICE. DO NOT SPLICE THE WIRE. ALL BOXES TO BE SIZED PER CEC.
17) SMOKE DETECTORS SHALL NOT BE ANY CLOSER THAN 1' FROM FIRE SPRINKLERS OR 3' FROM ANY SUPPLY DIFFUSER. IN AREA OF CONSTRUCTION OR POSSIBLE DAMAGE/CONTAMINATION ON NEWLY INSTALLED FIRE ALARM DEVICES SHALL BE COVERED UNTIL THAT AREA IS READY TO BE TURNED OVER TO THE OWNER.
18) ALL FIRE ALARM CIRCUITS SHALL BE IN CONDUIT, SURFACE RACEWAY OR OPEN RUN ABOVE CEILINGS, UNDER FLOORS AND IN WALLS IN A NEAT AND PROTECTED MANOR AS INDICATED ON DESIGN DOCUMENTS. EXPOSED CIRCUITS ARE ONLY PERMITTED WHEN NOTED AS EXPOSED ON DESIGN DOCUMENTS.
19) FIRE ALARM PANEL, REMOTES, AND COMPONENTS SHALL BE SECURED TO MOUNTING SURFACES PER MANUFACTURERS SPECIFICATIONS. NO SINGLE DEVICE SHALL EXCEED THE WEIGHT OF 20 LBS. WITHOUT SPECIAL MOUNTING DETAILS.
20) A DEDICATED BRANCH CIRCUIT SHALL BE PROVIDED FOR FIRE ALARM EQUIPMENT. THIS CIRCUIT SHALL BE ENERGIZED FROM THE COMMON USE AREA PANEL AND SHALL HAVE NO OTHER OUTLETS. THE BREAKER SHALL HAVE A RED LOCKING DEVICE TO BLOCK THE HANDLE IN THE "ON" POSITION. THE CIRCUIT BREAKER SHALL BE LABELED "FIRE ALARM CIRCUIT CONTROL". CIRCUIT ID TO BE LABELED AT FIRE PANEL/EXTENDERS.
21) THE INSTALLING CONTRACTOR SHALL PROVIDE A RECORD OF COMPLETION PER NFPA 72, FIGURE 10.18.2.1.1.
22) CONTROL PANELS, REMOTE ANNUNCIATORS SHALL BE INSTALLED WITH THEIR BOTTOMS MOUNTED AT 48".
23) THE INSTALLING CONTRACTOR SHALL PROVIDE SYSTEM PROGRAMMING FOR SUPERVISORY MONITORING PER CBC SECTION 901.6.2.
24) SUPERVISORY MONITORING SHALL BE TESTED AND VERIFIED AS SENDING CORRECT SIGNALS IN CONJUNCTION WITH FINAL ACCEPTANCE TEST.
25) ~~OWNER SHALL BE RESPONSIBLE FOR ESTABLISHING A FIRE SYSTEM MONITORING SERVICE.~~

SEISMIC ANCHORAGE

1. TO COMPLY WITH 2016 CBC, TITLE 24, SECTION #1632A.
2. WHERE ANCHORAGE DETAILS ARE NOT SHOWN ON THE DRAWINGS, THE FIELD INSTALLATION SHALL BE SUBJECT TO THE APPROVAL OF THE ELECTRICAL ENGINEER AND THE FIELD ENGINEER OF THE DIVISION OF THE STATE ARCHITECT.

CONSULTING ENGINEERS
JOHN CHONG ENGINEERING
1849 N HELM AVE #103 FRESNO CA 93727
(559) 325-3380 • FAX 257-3401
jcengineer@aol.com

REGISTERED PROFESSIONAL ENGINEER
JOHN S. CHONG
E 14419
Exp.6/30/2018
ELECTRICAL
STATE OF CALIFORNIA

Ownership of Documents
This document, the ideas and designs incorporated herein, as an instrument of Professional Service is the property of Integrated Designs by SOMAM Inc. and is not to be used, in whole or in part for any other project without written authorization.
© COPYRIGHT 2013

integrated designs by SOMAM, Inc.
ARCHITECTURE · ENGINEERING · INTERIOR DESIGN · CONSTRUCTION MANAGEMENT
6011 N. Fresno, Suite 130 – Fresno, California 93710
Phone (559) 436-0881 Fax (559) 436-0887 E-Mail: design@somam.com
www.integrateddesigns.com

Revision:	Revision Description:	Rev. Date:

Project Name & Address:
FREMONT ELEMENTARY SCHOOL
1 RELOCATABLE CLASSROOM
BAKERSFIELD CITY SCHOOL DISTRICT
607 TEXAS STREET, BAKERSFIELD, CA

Sheet Title: FIRE ALARM PLAN

Issue Date: 00/00/17
Date: 06/30/17
Designer: J CHONG
DR: J CHONG
PC: --

Agency Approval Stamp:
FILE #:
IDENTIFICATION STAMP
DIV. OF THE STATE ARCHITECT
OFFICE OF REGULATION SERVICES
03-118270
AC MF FLS SPHSS CC
DATE NOV - 8 2017
TRACKING #: DSA TRACKING NO.

Stamp(s):

Job No.: 5269

Sheet No.: E-3

Release:

FIRE ALARM SYMBOLS AND SCHEDULE

ITEM	DESCRIPTION	MODEL NUMBER	CSFM NUMBER	MOUNT	BACK BOX
	EXISTING FACP (FOR REFERENCE ONLY)	HOCHIKI #FIRENET 4127	7165-0410:0159	+60"	EQUIPMENT CABINET
	VOICE EVACUATION PANEL	HOCHIKI #EVAX-50R	6911-0410:0176	+60"	EQUIPMENT CABINET
	NAC SIGNAL & VOICE VAC BOOSTER PANEL SIGNAL EXPENDER	WHEELOCK #SPB 80/4	6911-0785:0157	+60"	EQUIPMENT CABINET
	SPEAKER STROBE 15cd 30cd 75cd 110cd TEMPORAL CODE 3	HOCHIKI #HSSPKWLP	7320-0410:0195	+80"	4"SQ X 2 1/2"D
WP	OUTDOOR HORN TEMPORAL CODE 3	HOCHIKI #WHE 24WR #HGOE	7135-0410:0187 7300-0410:0189	+80"	4"SQ X 2 1/2"D
S	ADDRESSABLE CEILING SMOKE DETECTOR WITH BASE	HOCHIKI #ALK-V /YBN-NSA-4	7272-0410:0173	CEILING	4"SQ X 2 1/2"D
A	ATTIC HEAT DETECTOR 190°F TEMP WITH BASE AND MONITOR MODULE	HOCHIKI #DFE 190°/HSC-XXXL #FRCMC-4	7270-0410:0119 7300-0410:0150	ATTIC	4"SQ X 2 1/2"D
	FIRE ALARM CABLE POWER LIMITED	WEST PENN AQ SERIES	7161-0859:0101		
	END OF LINE RESISTOR	N/A	N/A	LAST DEVICE	4"SQ X 2 1/2"D

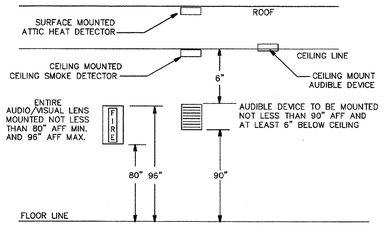

2 TYPICAL FIRE ALARM DEVICES MT'D DETAIL

N.T.S.

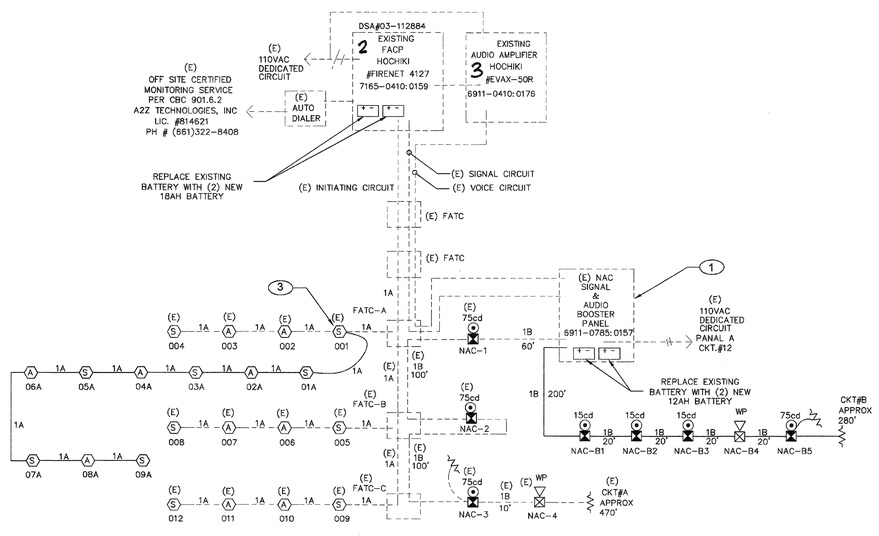

NOTES:

1. RISER DIAGRAM IS DIAGRAMMATIC. SEE FIRE ALARM FLOOR PLAN AND FIELD VERIFY EXACT ROUTING AS REQUIRED.
2. ALL INTERIOR FIRE ALARM CONDUCTORS ARE INSTALLED IN EMT CONDUIT AND CONCEAL ABOVE CEILING OR INSIDE WALL WITH 3/4"C.
3. FIRE ALARM CONDUCTOR CANNOT SPLICE INSIDE PULL BOX. CONDUCTOR MUST BE CONTINUE RUN BETWEEN FIRE ALARM DEVICES BACK BOX OR TERMINAL CABINET.

1 FIRE ALARM RISER DIAGRAM

N.T.S

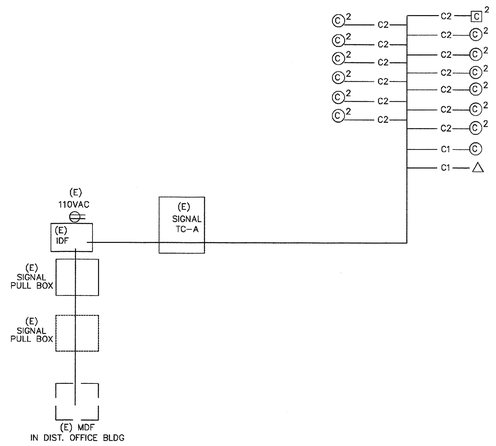

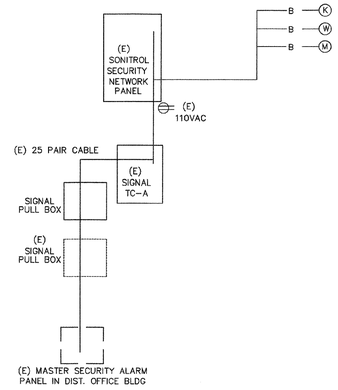

5 SECURITY ALARM SYSTEM RISER DIAGRAM

N.T.S

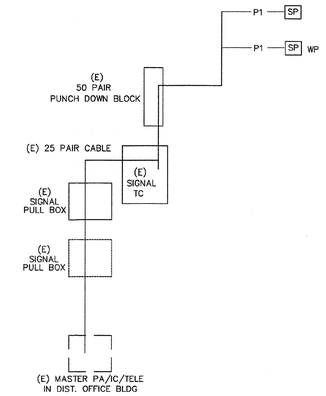

2 PA/IC/TELE SYSTEM RISER DIAGRAM

N.T.S

FIBER OPTIC CABLE
THREE MULTIMODE PAIRS (SIX STRANDS) AND THREE SINGLE-MODE PAIRS (SIX STRANDS)
BERK-TEK OM3 OF EQUAL
CAT 6A CABLE
BERK-TEK CAT. 6A
CABLE TESTING
ALL FIBER OPTIC CABLE MUST BE TESTED TO SUPPORT 1000BASE-FX FULL DUPLEX STANDARDS, ALL CAT 6A CABLE MUST BE TESTED TO SUPPORT 100BASE-TX. TEST RESULTS ARE TO BE PROVIDED TO OWNER I.T MANAGER FOR REVIEW AND APPROVAL.
IDF SWITCH EQUIPMENT

F/O	CISCO WS-C29XXX-24 W/ WS-C5484 GBIC (CONFIRM WITH OWNER)
TP	CISCO WS-C2950-24 (CONFIRM WITH OWNER)
CABINETS	HUBBLE RE4X OR EQUAL
JACKS	ALLEN TEL AT55-16 OR EQUAL
FACEPLATE	ALLEN TEL AT30-2-09 OR EQUAL
PATCH PANEL	ALLEN TEL ATPNL-48 OR EQUAL

LABELING IDENTICATION
ALL INSTALLED EQUIPMENT, CABLES, TERMINATIONS, ETC. WILL BE PERMANENTLY AND UNIQUELY MARKED. CABLES WILL BE MARKED USING A CONVENTION THAT WILL IDENTIFY ITS ORIGIN AND DESTINATION. LAN TERMINATIONS WILL SIMILARLY BE MARKED TO UNIQUELY IDENTIFY THEM WHILE PROVIDING THE SOURCE AND DESTINATION OF CABLE. IDENTIFICATIONS MUST BE SUCH THAT THEY WILL NOT RUB OFF, FALL OFF, OR EASILY BREAK AWAY.
DATA COMMUNICATION SYSTEM NOTES
1. CONTRACTOR TO PROVIDE ALL EQUIPMENT, PATCH CABLE AND ACCESSORY FOR A FULLY FUNCTIONAL SYSTEM.
2. NEW DATA JACK WIRING CONFIGURATION MUST BE MATCHED EXISTING SYSTEM. FIELD VERIFY PRIOR TO INSTALLATION.
3. ADMINISTRATIVE NODE TO BE RED IN COLOR WITH THE INSTRUCTIONAL NODE TO BE BLUE IN COLOR. NODE LOCATION MUST BE 12" WITHIN POWER RECEPTACLE AND FIELD VERIFY EXACT LOCATION WITH OWNER PROJECT COORDINATOR OR TECHNOLOGICAL SERVICES PERSONNEL PRIOR TO INSTALLATION.
4. ALL EQUIPMENT DOCUMENTATION AND WARRANTY CARDS WILL BE PROVIDED TO OWNER FOR FILING WITH MANUFACTURERS UPON COMPLETION OF INSTALLATION.

7 DATA COMMUNICATION SYSTEM RISER DIAGRAM

N.T.S

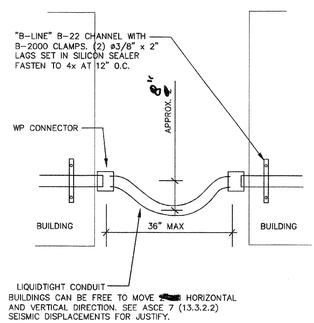

4 FLEX CONDUIT SUPPORT DETAIL

N.T.S

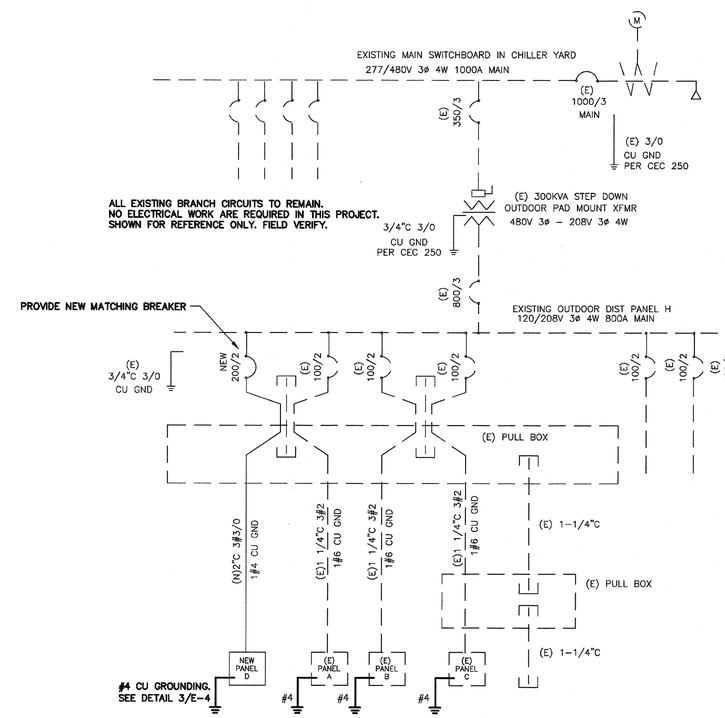

NOTES:
1. PROVIDE NEW MATCHING BREAKERS, FEEDERS AND PANELS PER PLANS.
2. ALL NEW CONDUCTOR SHALL BE 75°C THWN-2 COPPER IN CONDUIT. (AMPACITY FOR CONDUCTOR SELECTION MUST BE DETERMINED/DERATED BY THE ALLOWED TERMINATION RATINGS MARKED/APPROVED ON EACH DEVICES, MOTOR, APPLIANCE, XFMR O.C.P.C. PANEL, ETC. CONDUCTORS INSTALLED IN U.G OR WET LOCATIONS SHALL BE MARKER 'W'. PER 2016 CEC 110-14(C)(1).)
3. ALL WIRING OVER 100 VOLT SHALL BE INSTALLED IN RACEWAY CONDUIT, EMT ABOVE GRADE, PVC SCH. 40 BELOW GRAD AND STEEL CONDUIT ON EXPOSE SURFACE BELOW 8' AFF. FOR PHYSICAL PROTECTION.
4. STEEL BACK BOX SHALL BE PROVIDE FOR ALL NEW ELECTRICAL DEVICES SUCH AS SWITCH, OUTLET AND CONDUCTOR SPLICE.
5. ELECTRICAL CONTRACTOR IS RESPONSIBLE TO VERIFY THE EXISTING SWITCHBOARD AND PANELS ARE INSTALL PER ONE LINE DIAGRAM PRIOR TO WORKING, AND REPORT TO ENGINEERS IF ANY DISCREPANCY ARE FOUND.

1 SINGLE LINE DIAGRAM

N.T.S

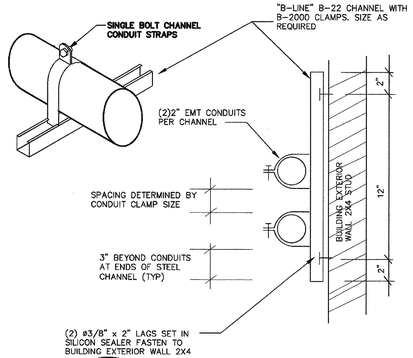

6 CONDUIT SUPPORT DETAIL - New BLD.

N.T.S

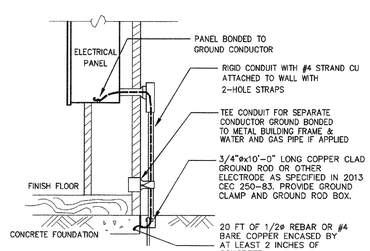

NOTES:
1. SIZE OF CONDUCTORS SHALL COMPLY WITH 2016 CEC TABLE 250-66.
2. BOND SEPARATE CONDUCTORS FROM GROUND ROD TO ELECTRICAL PANEL AND TO METAL BUILDING FRAME PER 2016 CEC 250-50. IN ADDITION TO THE DETAIL SHOWN ABOVE BOND THE ELECTRICAL GROUND TO METAL WATER PIPE EMBEDDED AT LEAST 10 FT. IN SOIL IF AVAILABLE (CEC 250-50, 250-82).
3. ALL MADE OF METAL FRAME BUILDINGS SHALL BE ELECTRICALLY BONDED TOGETHER, BOND TO HAND RAIL AND WATER PIPE IF APPLIED. (BOLTING ONLY IS NOT ACCEPTABLE BONDING).
4. CHECK RESISTANCE TO GROUND. IF RESISTANCE EXCEED 25 OHMS, INSTALL ADDITIONAL GROUND RODS WITH CONDUCTORS AS SHOWN SEPARATED AT LEAST 6'-0" UNTIL RESISTANCE IS REDUCED TO 25 OHMS OR LESS (2016 CEC 250-84).
5. FIELD INSPECTOR SHALL WITNESS GROUNDING TEST.

3 GROUNDING DETAIL

N.T.S

Ownership of Documents
This document, the ideas and designs incorporated herein, as an instrument of Professional Service is the property of Integrated Designs by SOMAM Inc. and is not to be used, in whole or in part for any other project without written authorization.
© COPYRIGHT 2013

integrated designs by SOMAM, Inc.
ARCHITECTURE · ENGINEERING · INTERIOR DESIGN · CONSTRUCTION MANAGEMENT
6011 N. Fresno, Suite 130 – Fresno, California 93710
Phone (559) 436-0881 Fax (559) 436-0887 E-Mail: design@somam.com
www.integrateddesigns.com

Revision:	Revision Description:	Rev. Date:	Revision:	Revision Description:	Rev. Date:

Sheet Title: DETAILS AND SYSTEM DIAGRAMS

Project Name & Address: FREMONT ELEMENTARY SCHOOL 1 RELOCATABLE CLASSROOM
BAKERSFIELD CITY SCHOOL DISTRICT
607 TEXAS STREET, BAKERSFIELD, CA

Issue Date: 00/00/17
Date: 06/30/17
Designer: J CHONG
DR: J CHONG
PC: --

Agency Approval Stamp:
FILE #:
IDENTIFICATION STAMP
DIV. OF THE STATE ARCHITECT
OFFICE OF REGULATION SERVICES
03-118270
AC___ FLS SPT SS CC
DATE NOV - 8 2017
TRACKING #: DSA TRACKING NO.

Stamp(s):

Job No.: 5269

Sheet No.: E-4

Release:

CONSULTING ENGINEERS
JOHN CHONG ENGINEERING
1843 N HELM AVE #103 FRESNO CA 93727
(559) 325-3386 • FAX 251-3401
jcengineer@aol.com

REGISTERED PROFESSIONAL ENGINEER
JOHN S. CHONG
E 14419
Exp.6/30/2018
ELECTRICAL
STATE OF CALIFORNIA

SECTION 16000
ELECTRICAL WORK

PART 1: GENERAL

THE GENERAL AND SUPPLEMENTARY GENERAL CONDITIONS SHALL APPLY TO ALL WORK OF THIS SECTION.

1-01 SCOPE OF WORK:

A. THIS PORTION OF THE WORK INCLUDES THE FURNISHING OF ALL LABOR AND MATERIAL NECESSARY FOR A COMPLETE WIRING SYSTEM TO OUTLETS AND ALL EQUIPMENT SHOWN ON THE DRAWINGS OR COVERED BY THIS SECTION OF THE SPECIFICATIONS.

1. COMPLETE SYSTEM OF BRANCH CIRCUIT WIRING AND EQUIPMENT FOR LIGHTS, PLUGS AND POWER.

2. FURNISH AND INSTALL POWER PANEL, FIXTURES, LAMPS, WALL SWITCHES AND CONVENIENCE OUTLETS.

3. ALL HANGERS, ANCHORS, SLEEVES, CHASES AND SUPPORTS FOR FIXTURES, ALL ELECTRICAL EQUIPMENT MATERIALS.

4. FURNISH, INSTALL AND CONNECT SWITCHES ETC., REQUIRED FOR EQUIPMENT COVERED BY OTHER SECTIONS OF THESE SPECIFICATIONS.

5. PROVISION OF FIRE ALARM SYSTEM PER PLANS.

1-02 WORK NOT INCLUDED:

A. THE FOLLOWING WORK SHALL BE DONE UNDER THE HEATING AND VENTILATING SECTION OF THE SPECIFICATIONS. FURNISH CONTROL EQUIPMENT (THE LOW VOLTAGE CONTROL AND INTERLOCK; FURNISH AND INSTALL MOTORS).

1-03 RULES AND REGULATIONS:

A. ALL WORK AND MATERIALS SHALL BE IN FULL ACCORDANCE WITH THE LATEST AND REGULATIONS OF THE STATE FIRE MARSHAL; TITLE 24, PART 3; THE SAFETY ORDERS OF THE DIVISION OF INDUSTRIAL SAFETY; THE CALIFORNIA ELECTRICAL CODE; AND OTHER APPLICABLE STATE LAWS OR REGULATIONS. NOTHING IN THESE PLANS OR SPECIFICATIONS IS TO BE CONSTRUED TO PERMIT WORK NOT CONFORMING TO THESE CODES.

1-04 EXAMINATION OF SITE AND PLANS:

A. BEFORE SUBMITTING A PROPOSAL, EACH BIDDER SHALL CAREFULLY EXAMINE THE ELECTRICAL, DRAWINGS AND SPECIFICATIONS. HE SHALL ALSO VISIT THE SITE AND FULLY INFORM HIMSELF AS TO ALL EXISTING CONDITIONS AND LIMITATIONS APPLYING TO THE WORK.

B. IF, AFTER SUCH EXAMINATION AND STUDY, IT APPEARS THAT ANY CHANGE FROM THE DRAWINGS AND SPECIFICATIONS SHALL BE ALLOWED, THE BIDDER SHALL SO STATE IN WRITING TOGETHER WITH ANY CHANGE IN COST INVOLVED.

C. BY THE ACT OF SUBMITTING A PROPOSAL, EACH BIDDER SHALL BE DEEMED TO HAVE MADE SUCH EXAMINATION OF THE DRAWINGS AND PREMISES, AND IT WILL BE ASSUMED THAT HE IS THEREFORE FAMILIAR WITH AND ACCEPTS, AND HAS BASED HIS PROPOSAL UPON SUCH EXISTING CONDITIONS AND LIMITATIONS APPLYING TO THE WORK.

1-05 WORKMANSHIP AND MATERIALS:

A. ALL WORKMANSHIP SHALL BE FIRST CLASS IN ALL RESPECTS AND CARRIED OUT IN A MANNER SATISFACTORY TO AND MEETING THE APPROVAL OF THE ARCHITECT. ALL WORKMEN EMPLOYED IN MAKING THE INSTALLATION SHALL BE SKILLED IN THEIR PARTICULAR TRADES.

B. ALL MATERIALS, APPLIANCES, AND EQUIPMENT SHALL BE NEW AND THE BEST OF THEIR RESPECTIVE KINDS, FREE FROM ALL DEFECTS OF THE MAKE, PROVIDED, THIS SHALL APPLY TO ALL PARTS OF THE WORK WHETHER OR NOT THIS PARTICULAR PARAGRAPH IS REFERRED TO BY NUMBER.

C. ALL APPARATUS, CONDUIT SYSTEMS, ETC., SHALL BE INSTALLED AND INTERCONNECTED SO AS TO FORM COMPLETE SYSTEMS AS HEREIN PROVIDED AND SHOWN ON THE ACCOMPANYING DRAWINGS, THE DRAWINGS FURNISHED BY THE ARCHITECT TO SUPPLEMENT AND EXPLAIN THOSE ACCOMPANYING THESE SPECIFICATIONS.

D. THIS CONTRACTOR SHALL FURNISH AND INSTALL ALL WORK NECESSARY TO MAKE COMPLETE WORKING SYSTEMS, EXCEPTING ONLY THOSE PORTIONS THAT ARE SPECIFICALLY MENTIONED HEREIN FURNISHED BY OTHER CONTRACTORS.

PART 2: PRODUCTS

2-01 SERVICE:

A. EXISTING POWER SERVICE IS 2,000 AMP 277/480 VOLT THREE PHASE 4 WIRES.

2-02 PANELBOARDS:

A. ALL THE PANELBOARD SHALL BE OF THE DEAD FRONT, DEAD REAR, COMPLETELY BUSSED AND WITH CIRCUIT BREAKERS AS PER LAYOUT ON PLANS AND AS BUILT BY SQUARE D, WESTINGHOUSE OR APPROVED EQUAL.

B. THE PANELBOARD SHALL BE CONSTRUCTED IN ACCORDANCE WITH THE STANDARD SET UP BY THE UNDERWRITER'S LABORATORIES, INC.. PANEL FRONTS SHALL BE MONOTRIM TYPES WITH CONCEALED MOUNTING SCREWS.

C. THE PANELBOARDS SHALL BE EQUIPPED WITH HINGED DOORS, TYPE WRITTEN CIRCUIT DIRECTORIES. ALL FINISH SHALL BE PRIME COAT. PROVIDE HINGED YALE LOCKS ON ALL PANELS KEYED ALIKE. FURNISH SIX (6) KEYS.

D. DETAILED DRAWINGS OF THE PANELBOARDS CONSTRUCTION SHALL BE SUBMITTED TO THE ARCHITECT/ ENGINEERS AND UTILITY POWER COMPANY FOR APPROVAL BEFORE ITS CONSTRUCTION IS STARTED. SIX (6) COPIES REQUIRED.

2-03 WIRE:

A. ALL WIRE INSTALLED IN THIS CONTRACT SHALL BE OF A STANDARD MANUFACTURER AS APPROVED BY THE NATIONAL BOARD OF FIRE UNDERWRITER'S AND OF THE SIZE AS INDICATED ON THE DRAWINGS. ALL WIRE SHALL BEAR THE UNDERWRITER'S LABEL AND SHALL BE BROUGHT TO THE JOB IN UNBROKEN PACKAGES AND APPROVED BY THE ARCHITECT BEFORE IT IS INSTALLED.

B. ALL CIRCUIT WIRE SHALL BE TYPE "THHN" COPPER UNLESS OTHERWISE NOTED. ALL FEEDERS SHALL BE "THWN" COPPER.

C. NUMBER 12 B&S GAUGE WIRE SHALL BE THE SMALLEST GAUGE WIRE USED. ALL RUNS OVER 80 FEET FROM PANEL TO FIRST OUTLET SHALL BE INCREASED TO NEXT SIZE.

D. NO WIRE SHALL BE DRAWN INTO CONDUIT UNTIL ALL WORK OF ANY NATURE THAT MAY CAUSE INJURY IS COMPLETED. NO BLOCKS, TACKLE OR OTHER MECHANICAL MEANS, SHALL BE USED IN PULLING IN WIRES AND CARE SHALL BE TAKEN IN PULLING WIRES THAT NO DAMAGE OCCURS TO THE INSULATION OR WIRE.

E. ALL WIRE #6 B&S GAUGE OR LARGER SHALL BE STRANDED.

F. ALL WIRING SHALL BE DONE WITH IDENTIFIED NEUTRALS.

G. ALL SPLICED SHALL BE WITH "SCOTCHLOK" SPRING CONNECTORS. NO WIRE NUTS WILL BE PERMITTED.

2-04 CONDUIT:

A. AN IRON PIPE CONDUIT SYSTEM SHALL BE INSTALLED FOR THE CONNECTIONS FOR ALL OUTLET BOXES, JUNCTION BOXES, PANELBOARD CABINETS, GUTTERS, ETC.. CONDUIT SHALL BE RUN CONTINUOUS BETWEEN OUTLETS, ECT., AND WITH MINIMUM NUMBER OF BENDS.

B. ALL CONDUIT INSTALLED IN CONCRETE SLABS, CONCRETE WALLS, UNDERGROUND OR IN DAMP OR HAZARDOUS AREAS, AND ALL CONDUIT CONTAINING WIRES LARGER THAN #4 AWG SHALL BE RIGID FULL WEIGHT, ALL OTHER CONDUIT MAY BE GALVANIZED ELECTRICAL METALLIC TUBING WITH GLAND RING WATERTIGHT TYPE. PVC SCHEDULE 40 MAY BE USED FOR UNDERGROUND RUNS. PROVIDE GREEN GROUND WIRE SIZED PER CODE FOR ALL RUNS.

C. ALL CONDUITS SHALL BE SHERARDUCT, G.E. WHITE, BUCKEYE OR EQUAL. STUB UPS FROM PVC SCHEDULE 40 SHALL BE RIGID STEEL ELBOWS.

2-05 OUTLET:

A. IN GENERAL, THE LOCATIONS OF ELECTRICAL OUTLETS SHALL BE AS SHOWN ON THE DRAWINGS, HOWEVER, THE CONTRACTOR SHALL MAKE ANY CHANGES NECESSARY TO SUIT CONDITIONS ON THE JOB OR RE-ARRANGEMENT OF BUILT-IN FIXTURES AND EQUIPMENT AS DIRECTED BY THE ARCHITECT OR HIS REPRESENTATIVE.

B. IT SHOULD BE INCUMBENT UPON THE CONTRACTOR TO STUDY THE GENERAL BUILDING PLANS WITH RELATION TO SPACES SURROUNDING EACH OUTLET IN ORDER THAT HIS WORK MAY FIT THE WORK OF OTHERS AND THAT WHEN FIXTURES OR OTHER EQUIPMENT ARE INSTALLED THEY WILL SYMMETRICALLY LOCATED ACCORDING TO ROOM LAYOUT. REFER ALL CONFLICTS AND DISCREPANCIES PROMPTLY TO THE ARCHITECT.

C. ALL OUTLETS SHALL BE STANDARD ONE TO TWO PIECES GALVANIZED KNOCKOUT OUTLET BOXES, NATIONAL, STEEL CITY, APPLETON, OR EQUAL, AND APPROVED MAKE.

D. ALL OUTLETS SHALL BE STANDARD ONE OR TWO PIECES GALVANIZED KNOCKOUT AND ALL OF A MANUFACTURE AS APPROVED.

E. NO OUTLET BOX SHALL BE SMALLER THAN 4-INCH DIAMETER AND 1-1/2 INCH IN DEPTH.

F. ALL SPECIAL OUTLETS SHALL BE AS HEREINAFTER SPECIFIED.

2-06 PLATE FINISHES:

A. ALL WALL SWITCHES, CONVENIENCE, TELEPHONE AND SPECIAL, ALSO BLANK COVERS FOR THE VARIOUS BOXES REQUIRED TO BE SO EQUIPPED, SHALL HAVE STAINLESS STEEL PLATES TO SUIT SIERRA OR EQUAL.

B. GANG TYPE PLATES SHALL BE USED FOR MULTIPLE UNITS.

C. PLATES FOR SWITCHES AND RECEPTACLES LOCATED OUTDOORS SHALL BE WEATHERPROOF (FLIP LID TYPES).

2-07 MATERIAL:

A. TUMBLER SWITCHES SHALL BE LEVITON #1221-I SERIERS, OR EQUAL 20 AMP. QUIETTE. MOTION DETECTOR SWITCHES SHALL BE HUBBELL #WSS-277 FOR 277V AND HUBBELL #WSS-120 FOR 120V.

B. ALL CONVENIENCE RECEPTACLES SHALL BE LEVITON #5252-I.

C. 208 VOLT, 3 WIRE RECEPTACLES SHALL BE HUBBELL #6810 OR EQUAL.

D. EXTERNALLY OPERATED SWITCHES SHALL BE TYPE "C", SQUARE D, TRUMBELL OR EQUAL.

2-08 LIGHTING FIXTURES:

A. NOT APPLY.

2-09 GROUNDING:

A. ALL CONDUIT SYSTEM, SUPPORTS, CABINETS, SWITCHBOARDS, ETC., AND NEUTRAL CONDUCTORS MUST BE PERMANENTLY AND EFFECTIVELY GROUNDED BY MEANS OF APPROVED GROUND CLAMPS IN ACCORDANCE WITH THE ELECTRICAL SATIETY ORDERS OF THE DEPARTMENT OF INDUSTRIAL RELATIONS.

B. THIS CONTRACTOR SHALL EXERCISE EVERY PRECAUTION TO OBTAIN GOOD CONTACTS AT ALL PANEL BOXES, PULL BOXES, ETC., WHERE IT IS NOT POSSIBLE TO OBTAIN GOOD CONTACT, THE CONDUITS SHALL BE BONDED AROUND THE BOXES WITH A #6 B&S GAUGE, RUBBER COVERED DOUBLE BRAIDED WIRE WITH APPROVED GROUND CLAMPS.

C. ALL EQUIPMENT CASES, MOTOR FRAMES, ETC., SHALL BE COMPLETELY GROUNDED TO SATISFY THE REQUIREMENTS OF THE ELECTRICAL SAFETY ORDERS.

PART 3: EXECUTION

3-01 WORK ASSOCIATED WITH OTHER CONTRACTORS:

A. IN PREPARING THE ELECTRICAL BID, THE ELECTRICAL CONTRACTOR SHALL STUDY THE MECHANICAL PLANS AND SPECIFICATIONS IN PARTICULAR AND THE PLANS FOR THE WHOLE CONTRACT IN GENERAL IN ORDER TO DETERMINE THE SCOPE OF THE ELECTRICAL WORK INVOLVED IN CONNECTION WITH THE OTHER TRADES CONCERNED WITH THE CONTRACT. THE BID OF THE ELECTRICAL CONTRACTOR SHALL TAKE INTO ACCOUNT ALL THE ELECTRICAL WORK ASSOCIATED WITH THE GENERAL CONTRACT AND NO EXTRA WILL BE SUBSEQUENT ALLOWED FOR THE FAILURE OF THE ELECTRICAL CONTRACTOR TO ANTICIPATE THESE REQUIREMENTS.

B. ALL ELECTRICAL LINE AND LOW VOLTAGE CONDUIT WIRING BY ELECTRICAL CONTRACTOR. ALL LINE VOLTAGE WIRING EXTERNAL OF CONTROL EQUIPMENT SHALL BE INSTALLED UNDER ELECTRICAL WORK. DISCONNECT SWITCHES SHALL BE PROVIDED AT ALL MOTOR LOCATIONS NOT IN SIGHT OF PANELBOARD TO DISCONNECTS OR OVER 50 FEET AWAY FROM SAME.

C. THE ELECTRICAL WORK DONE IN CONJUNCTION WITH THE MECHANICAL AND OTHER TRADES SHALL BE DONE IN ACCORDANCE WITH DIAGRAMS AND INSTRUCTIONS OF THE EQUIPMENT MANUFACTURERS, WHICH SHALL BE FURNISHED, TO ELECTRICAL CONTRACTOR BY THE OTHER TRADE INVOLVED. ELECTRICAL CONTRACTOR IS NOT EXPECTED TO INTERPRET SUCH DIAGRAMS BUT SHALL REFER ANY DISCREPANCIES TO THE MECHANICAL CONTROL INVOLVED FOR INTERPRETATION.

D. THE ELECTRICAL CONTRACTOR SHALL FURNISH DISCONNECT SWITCHES FOR MOTORS WHERE REQUIRED BY APPLICABLE CODE IF THEY ARE NOT FURNISHED BY OTHERS.

E. THERMAL OVERLOAD SWITCHES (G.E.-CR. 1061 OR EQUAL) SHALL BE FURNISHED FOR ALL FRACTIONAL HORSEPOWER MOTORS WHERE SUCH PROTECTION IS NOT INCLUDED AS PART OF ANOTHER CONTRACT.

F. ALL MOTOR AND CONTROL LOCATIONS SHOWN ON THE PLANS AND APPROXIMATE ONLY AND THE ELECTRICAL CONTRACTOR SHALL VERIFY THE EXACT LOCATIONS WHICH THE MECHANICAL CONTRACTOR IS CONNECTED WITH.

G. ALL WIRE SHALL BE #12 AWG IN CONDUIT UNLESS OTHERWISE NOTED

3-02 EXCAVATING AND BACKFILL:

A. THE ELECTRICAL CONTRACTOR SHALL DO ALL EXCAVATING AND BACKFILLING IN CONNECTION WITH ELECTRICAL WORK. BACKFILLING SHALL BE DONE IN LAYERS OF APPROXIMATE 12-INCH WATER TAMPED FOR EACH LAYER. ALL DISTURBED SURFACES SHALL BE RESTORED TO CONDITION, PROPERLY TAMPED TO ELIMINATE ANY SETTLEMENT. SEE SECTION 02223 BACKFILLING.

3-03 DRAWING OF RECORD:

A. ARCHITECT WILL FURNISH THE ELECTRICAL CONTRACTOR, AT COST, WITH REPRODUCIBLE TRACINGS OF ELECTRICAL DRAWINGS INCLUDED IN THIS CONTRACT. THE ELECTRICAL CONTRACTOR SHALL LEGIBLY INDICATE EXACTLY THEREON, THE LOCATIONS OF ELECTRICAL FIXTURES, CONDUIT RUNS, NUMBER AND SIZE BOXES OUTLETS, ETC., INSTALLED BY HIM OR HER.

B. THESE DRAWINGS SHALL ALSO SERVE AS WORK PROGRESS SHEETS AND THE CONTRACTOR SHALL MAKE NEAT AND LEGIBLE NOTATIONS THEREON DAILY AS THE WORK PROCEEDS.

C. THESE SHALL BE AVAILABLE AT ALL TIMES FOR INSPECTION AND SHALL BE KEPT AT A LOCATION DESIGNATED BY THE ARCHITECT.

D. AT COMPLETION OF THE WORK THESE RECORD DRAWINGS SHALL BE SIGNED BY THE CONTRACTOR (WITH DATE) AND RETURNED TO THE OFFICE OF THE ARCHITECT.

3-04 IDENTIFICATION OF SWITCHES AND APPARATUS:

A. ALL PANELBOARD CIRCUITS, EXTERNALLY OPERATED SWITCHES AND APPARATUS USED FOR THE OPERATION OF OR CONTROL OF CIRCUITS, APPLIANCES OR EQUIPMENT SHALL BE PROPERLY IDENTIFIED WITH BAKELITE NAMEPLATES 1" X 3". ALL SUCH NAMEPLATES SHALL BE SUBMITTED TO THE ARCHITECT BEFORE BEING SECURED ON THE APPARATUS. CARD HOLDERS IN ANY FORM ARE NOT ACCEPTABLE.

3-05 CLEANING AND LABELING:

A. THIS CONTRACTOR SHALL THOROUGHLY CLEAN ALL RECEPTACLES, PANELBOARDS AND OTHER PARTS OF THE WORK, DELIVERING THE SAME IN PERFECT CONDITION. ALL CIRCUIT BREAKERS, SWITCHES, CIRCUITS AND PANELBOARDS LABELED WITH STENCIL OR OTHER APPROVED METHOD INDICATING THEIR EXACT FUNCTION.

3-06 COMPLETING WORK:

A. AT COMPLETION OF HIS WORK, THIS CONTRACTOR SHALL REMOVE ALL WASTE MATERIALS AND DEVICES RESULTING FROM HIS WORK, LEAVING EVERYTHING IN A COMPLETE AND SATISFACTORY CONDITION. HE SHALL DELIVER ALL KEYS TO THE OWNER'S REPRESENTATIVE. UP-TO-DATE RECORD DRAWINGS SHALL BE KEPT BY THIS CONTRACTOR AND DELIVERED TO THE OWNER ON REPRODUCIBLE SEPIAS AT THE END OF THE CONTRACT.

3-07 GUARANTEES:

A. AS A CONDITION PRECEDENT TO THE ISSUANCE OF THE FINAL CERTIFICATE OF A COMPLETE PAYMENT, DELIVER TO THE ARCHITECT SPECIAL WRITTEN GUARANTEE IN EFFECT THAT SHOULD IT DEVELOP DEFECTIVE MATERIALS OR FAULTY WORKMANSHIP ANY SUCH FAILURE SHALL IMMEDIATELY BE MADE GOOD BY THIS CONTRACTOR AT HIS OWN EXPENSE.

END OF SECTION

CONSULTING ENGINEERS
JOHN CHONG ENGINEERING
1849 N HELM AVE #103 FRESNO CA 93727
(559) 325-2380 • FAX 257-3401
jcengineer@aol.com

REGISTERED PROFESSIONAL ENGINEER
JOHN S. CHONG
E 14419
Exp.6/30/2018
ELECTRICAL
STATE OF CALIFORNIA

Ownership of Documents
This document, the ideas and designs incorporated herein, as an instrument of Professional Service is the property of Integrated Designs by SOMAM Inc. and is not to be used, in whole or in part for any other project without written authorization.
© COPYRIGHT 2013

integrated designs by SOMAM, Inc.
ARCHITECTURE · ENGINEERING · INTERIOR DESIGN · CONSTRUCTION MANAGEMENT
6011 N. Fresno, Suite 130 – Fresno, California 93710
Phone (559) 436-0881 Fax (559) 436-0887 E-Mail: design@somam.com
www.integrateddesigns.com

Revision:	Revision Description:	Rev. Date:	Revision:	Revision Description:	Rev. Date:

Sheet Title: ELECTRICAL SPECIFICATION

Project Name & Address:
FREMONT ELEMENTARY SCHOOL
1 RELOCATABLE CLASSROOM
BAKERSFIELD CITY SCHOOL DISTRICT
607 TEXAS STREET, BAKERSFIELD, CA

Issue Date: 00/00/17
Date: 06/30/17
Designer: J CHONG
DR: J CHONG
PC: --

Agency Approval Stamp:
FILE #:
IDENTIFICATION STAMP
DIV. OF THE STATE ARCHITECT
OFFICE OF REGULATION SERVICES
03-118270
AC FLS SEH SS CL
DATE NOV - 8 2017
TRACKING #: DSA TRACKING NO.

Stamp(s):

Job No.: 5269

Sheet No.: E-5

Release:

MODULAR CLASSROOM BUILDINGS

BY

SILVER CREEK INDUSTRIES, INC.
2830 BARRETT AVE, PERRIS, CALIFORNIA 92571
PHONE : (951) 943-5393 FAX : (951) 943-2211

ELITE MODULAR - STOCKPILE #6

(x5) 24' x 40' OFFICE BUILDING

SCI PROJECT # 10914

GENERAL NOTES

SEE PC SHEET
A-0

BUILDING DATA

NUMBER OF STORIES:	1 - STORY
OCCUPANCY:	E: 24' x 40' OFFICE BUILDINGS
TYPE OF CONSTRUCTION:	VB
FLOOR LIVE LOAD:	☐ 50 PSF ☐ 50+15 PSF PARTITION LOAD ☑ 100 PSF ☐ 150 PSF
ROOF LIVE LOAD:	20 PSF
FLOOR DEAD LOAD:	☑ WOOD FLOOR - 8 PSF ☐ CONC FLOOR - 33 PSF
ROOF DEAD LOAD:	17 PSF (INCLUDING SPRINKLER LOAD)
RAMP LIVE LOAD:	100 PSF
BUILDING AREA: (AREA WITHOUT OVERHANGS / AREA WITH OVERHANGS) ALLOWABLE AREA = 9000 SF	☑ 24'x40' BLDG - 980 SF/1140 SF ☐ 84'x40' BLDG - 3360 SF/3990 SF ☐ 36'x40' BLDG - 1440 SF/1710 SF ☐ 96'x40' BLDG - 3840 SF/4560 SF ☐ 48'x40' BLDG - 1920 SF/2280 SF ☐ 108'x40' BLDG - 4320 SF/5130 SF ☐ 60'x40' BLDG - 2400 SF/2850 SF ☐ 120'x40' BLDG - 4800 SF/5700 SF ☐ 72'x40' BLDG - 2880 SF/3420 SF
FOUNDATION:	☑ WOOD ☐ CONCRETE
CEC CLIMATE ZONES:	1- 16

24x40-1
24x40-2
24x40-3
24x40-4
24x40-5

WIND DESIGN DATA

SECTION 1603.A.1.4

SEE PC SHEET
A-0

APPLICABLE STANDARDS

SEE PC SHEET
A-0

EARTHQAUKE DESIGN DATA

SEE PC SHEET
A-0

APPLICABLE CODES

SEE PC SHEET
A-0

SHEET INDEX

PROJECT SPECIFIC INDEX

SHT NO.	ARCHITECTURAL
A-0 N	PROJECT SPECIFIC COVER SHEET
A-0.2 N	PROJECT SPECIFIC SCHEDULES
A-1.01 N	PROJECT SPECIFIC FLOOR PLAN - 24'x40'
A-2.11 N	PROJECT SPECIFIC REFLECTED CEILING PLAN
A-3.01 N	PROJECT SPECIFIC ROOF PLAN 0.030 METAL DECK - DUAL SLOPE
A-3.50 N	PROJECT SPECIFIC ROOF DETAIL 0.030 STANDING SEAM ROOF
A-4.01 N	PROJECT SPECIFIC EXTERIOR ELEVATIONS
A-6.01 N	PROJECT SPECIFIC INTERIOR ELEVATIONS
SHT NO.	**MECHANICAL**
M-1.01 N	PROJECT SPECIFIC MECHANICAL PLAN - WALL MOUNT - 24'x40'
SHT NO.	**ELECTRICAL**
E-1.01 N	PROJECT SPECIFIC ELECTRICAL PLAN - 24'x40'

SHEET INDEX - PC #04-114102

SHT NO.	ARCHITECTURAL
A-0	COVER SHEET
A-0A	T & I FORMS
A-0.0	BUILDING OPTIONS SCHEDULE
A-0.1	SYMBOLS LEGEND, ABBREVIATION, AND ADA SIGNAGE
A-0.2	SCHEDULES
A-0.3	TYPICAL KEY PLANS - 24' TO 120'x40'
A-0.5A	ENERGY CALC'S - PRF FORMS - ZONE 14 WORST CASE
A-0.5B	ENERGY CALC'S - PRF FORMS - ZONE 15 WORST CASE
A-0.5C	ENERGY CALC'S - PRF FORMS - ZONE 16 WORST CASE
A-0.6A	ENERGY CALC'S - ELC FORMS - 24' x 40' BUILDINGS
A-0.6B	ENERGY CALC'S - LTO / MCH FORMS - 24' x 40' BUILDINGS
A-0.6C	ENERGY CALC'S - LTI FORMS - 24' x 40' BUILDINGS
A-0.6D	ENERGY CALC'S - ELC FORMS - 120' x 40" BUILDINGS
A-0.6E	ENERGY CALC'S - LTO / MCH FORMS - 120' x 40' BUILDINGS
A-0.6F	ENERGY CALC'S - LTI FORMS - 120' x 40' BUILDINGS
A-0.7	DESIGN ENERGY VALUES BY ZONE & CALGREEN SPECIFICATIONS
A-1.01	FLOOR PLAN - 24'x40'
A-2.11	REFLECTED CEILING PLAN - 24'x40' - VAULTED CEILING
A-2.20	CEILING DETAILS - T GRID
A-3.01	ROOF PLAN - 0.018 METAL DECK - DUAL SLOPE - 24'x40'
A-3.50	ROOF DETAILS - 0.018 STANDING SEAM ROOF DECK
A-4.01	EXTERIOR ELEVATIONS - DUAL SLOPE - 24'x40'
A-5.02	CROSS SECTION - DUAL SLOPE - 0.018 B.U., OR TPO ROOF DECK
A-5.05	CROSS SECTION
A-5.50	ARCHITECTURAL DETAILS - WOOD STUD - WOOD SIDING
A-5.70	ARCHITECTURAL DETAILS - FLOOR
A-5.80	ARCHITECTURAL DETAILS - MISC/OPTIONS
A-5.81	ARCHITECTURAL DETAILS - MISC/OPTIONS
A-6.01	INTERIOR ELEVATIONS 24'x40'
SHT NO.	**FOUNDATION**
F-0.03	WOOD FOUNDATION PLAN - 24'x40' (100 PSF)
F-0.50	FOUNDATION DETAILS - WOOD
SHT NO.	**STRUCTURAL**
S-0.1	STRUCTURAL SPECIFICATIONS
S-1.01	FLOOR FRAMING PLAN - WOOD FLOOR
S-1.50	FLOOR FRAMING DETAILS - WOOD FLOOR
S-2.11	ROOF FRAMING PLAN - 0.018, BUILT-UP OR TPO ROOF-20 PSF
S-2.51	ROOF FRAMING DETAILS - DUAL SLOPE
S-2.60	ROOF FRAMING DETAILS
S-3.02	BUILDING SECTION - DUAL SLOPE ROOF
S-5.00	WALL FRAMING ELEVATIONS - WOOD STUDS
S-5.10	WALL FRAMING DETAILS - WOOD STUDS
S-5.11	WALL FRAMING DETAILS - WOOD STUDS
S-5.12	WALL FRAMING OPENING SCHEDULE - WOOD STUDS
SHT NO.	**PLUMBING**
P-1.01	PLUMBING DETAILS AND SCHEDULE
SHT NO.	**MECHANICAL**
M-0.1	MECHANICAL NOTES, SCHEDULES AND DETAILS
M-1.01	MECHANICAL PLAN - WALL MOUNT - 24'x40'
SHT NO.	**ELECTRICAL**
E-1.01	ELECTRICAL PLAN - 24'x40'
SHT NO.	**RAMP**
R-1.01	STANDARD RAMP PLAN
R-2.01	RAMP DETAILS

THESE DRAWINGS AND ALL MATERIAL CONTAINED HEREIN ARE THE PROPERTY OF SILVERCREEK INDUSTRIES, INC (SCI Inc) AND SHALL NOT BE REPRODUCED, COPIED OR OTHERWISE DISPOSED OF DIRECTLY OR INDIRECTLY AND SHALL NOT BE USED IN WHOLE OR IN PART TO ASSIST IN THE MAKING OF OR FOR THE PURPOSE OF FURNISHING ANY INFORMATION FOR THE MAKING OF DRAWINGS, PRINTS, APPARATUS OR PARTS THEREOF WITHOUT THE FULL KNOWLEDGE AND WRITTEN CONSENT OF SCI Inc.
ALL PATENTABLE MATERIAL CONTAINED HEREIN AND ORIGINATING WITH SCI Inc SHALL BE THE PROPERTY OF SCI Inc

SILVER CREEK INDUSTRIES, INC.
"BUILDING FOR THE NEXT GENERATION"
SILVER CREEK
2830 BARRETT AVE. PERRIS, CALIFORNIA 92571
PHONE: 951-943-5393 FAX: 951-943-2211

PROJECT NAME:

24x40 STOCKPILE OFFICE BUILDING

SHEET TITLE:

PROJECT SPECIFIC COVER SHEET

LICENSED ARCHITECT — JACK F. SWEENEY — No. C-33461 — REN: 01-31-2019 — STATE OF CALIFORNIA

ARCHITECT OF RECORD SUBMISSION DATE

FILE #:15-6
IDENTIFICATION STAMP
DIV. OF THE STATE ARCHITECT
OFFICE OF REGULATION SERVICES
03-118270
AC FLS SS
DATE NOV - 8 2017
TRACKING #: 53221-290

PROJECT SPECIFIC STATE AGENCY APPROVAL

IDENTIFICATION STAMP
DIV. OF THE STATE ARCHITECT
04 118284 1.
ACS FLS SS RAF
DATE MAY 18 2017
ACS: SCOTT ADDISON SSS: R. FRENCH
FLS: JARED ATALIAN

ORIGINAL PC STATE AGENCY APPROVAL

REVISIONS

1
2
3
4
5
6
7
8

SILVER CREEK INDUSTRIES

PROJECT NO:	10914
DRAWN BY:	
SCALE:	AS NOTED
DATE:	04-20-17

SHEET NUMBER

A-0N

WINDOW SCHEDULE

WINDOW NO.	QTY	TYPE	WIDTH	HEIGHT	FUNCTION	FRAME MATERIAL	GLASS MATERIAL	WALL THICKNESS	NOTES
A		1	8'-0"	4'-0"	XOX	ANOD	DP		
B		4	5'-0"	4'-0"	FIXED	ANOD	DP		
C		5	4'-0"	4'-0"	FIXED	ANOD	CLEAR TEMPERED		INTERIOR WINDOW

WINDOW FINISH

ANOD: CLEAR ANODIZED ALUMINUM FRAME
BRONZ: BRONZE ANODIZED ALUMINUM FRAME
PAINT: PAINTED FRAME
WF: 16GA WELDED FRAME
FRW: FIRE RATED WINDOW
FRAME: MIN 0.048" THICK WELDED FRAME
FRG: FIRE RATED GLAZING: 1/4" WIRED GLASS. LABELED TO MEET THE REQUIREMENTS FOR A 3/4 HOUR FIRE WINDOW ASSEMBLY PER CBC SECTION/TABLE 715.5

DP: 3/16" MINIMUM DUAL PANE TEMPERED GLASS OF SOLAR GRAY - 3/16" ENERGYSHIELD. ALL OPERABLE SASH SHALL HAVE SCREENS. (U-FACTOR = .510 MAX, VT = 0.500 MIN., SHGC = .350 MAX, STC = 36 MIN.)

WINDOW TYPE

SEE PC SHEET A-0.2 FOR WINDOW TYPE 1

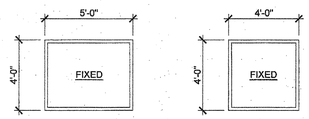

WINDOW TYPE "4" WINDOW TYPE "5"

DOOR SCHEDULE

DOOR NO	WIDTH	HEIGHT	DOOR TYPE	QTY	DOOR MAT/FIN	FRAME MAT/FIN	HARDWARE SET	WALL THICKNESS	NOTES
1	3'-0"	7'-0"	A		HM	KD	HW - 8		
2	3'-0"	7'-0"	A		SCL	KD	HW - 7		

DOOR MATERIAL AND FINISH ABBREVIATIONS

HM: 18GA HOLLOW METAL
WF: 16GA WELDED FRAME
AL: ALUMINUM
SST: STAINLESS STEEL

KD: KNOCK DOWN FRAME
SCL: SOLID CORE WOOD LEGACY
HC: HOLLOW CORE WOOD
PT: PAINTED

EXTERIOR DOORS TO BE UNINSULATED SINGLE LAYER DOORS W/ U-FACTOR OF 0.500 MAX

DOOR TYPES & NOTES

SEE PC SHEET
A-0.2

FINISH SCHEDULE

ROOM NAME	FLOORING		WALL FINISH				CEILING		NOTES
	FLOOR	BASE	FRONT	LEFT	REAR	RIGHT	CEILING	CEILING HT	
SMALL GROUP INSTRUCTION 101	CARP	4" TS	TACK	TACK	TACK	TACK	CP-755B	8'-6" VAULTED	
OFFICE 102-103	CARP	4" TS	TACK	TACK	TACK	TACK	CP-755B	8'-6" VAULTED	

FLOOR, WALL, CEILING MATERIALS

FLOORING
CARP: CARPET PER STATE OF CALIFORNIA SPECIFICATIONS COMPLYING WITH GROUP 1; TYPE "A" OR TYPE "B"; CLASS 2; DENSITY 4600; DIRECT GLUE DOWN
SV: SHEET VINYL FLOORING
VCT: VINYL COMPOSITION TILE

BASE
4" TS: 4" TOP SET BASE
6" TS: 6" TOP SET BASE
SC: 6" SELF-COVE BASE

WALLS
TACK: 1/2" VINYL TACKBOARD CLASS 1 OVER ½" GYPSUM BOARD BACKING
FRP: 1/8" FIBER REINFORCED PANEL OVER ½" WATER RESISTANT GYPSUM BOARD
GYP: 1/2" GYPSUM BOARD; TAPE; TEXTURE; PAINTED FINISH
PLY: 1/2" PLYWOOD FINISH
NF: NO FINISH

CEILING
CP: ACOUSTICAL LAY IN GRID CEILING PANELS (SEE SPECIFICATION NOTES ON REFLECTED CEILING PLAN)
HC: 5/8" GYPSUM BOARD; TAPE; TEXTURE; PAINTED FINISH (HARD LID CEILING)
GBP: 1/2" GYPSUM BOARD WASHABLE PANELS (PAINTED)

INSULATION SPECIFICATIONS

SEE PC SHEET
A-0.2

FINISH NOTES

SEE PC SHEET
A-0.2

DOOR HARDWARE

OFFICE - INTERIOR DOOR HW-7

LOCKSET	YALE 5407 LN	Finish 26D	or equal
BUTTS	HAGER BB1168 NRP 4 ½" x 4 ½"	Finish 26D	or equal

SMALL GROUP INSTRUCTION EXTERIOR DOOR HW-8

LOCKSET	YALE AU5417LN 626 W/LF YALE IC CORES	Finish 626	or equal
BUTTS	PEMKO CHS83HDI FULL HT. HINGES	Finish 26D	or equal
CLOSURE	NORTON 750 SERIES	Finish 689	or equal
WEATHER STRIP	HAGER 891SAV 3684	Finish Alum	or equal
THRESHOLD	PEMKO	Finish Alum	or equal
DOOR BOTTOM	PEMKO 368 N DOOR SWEEP		
DOOR HOLDER	TRIMCO 1254 (INSTALL AT +78"A.F.F.)		

THESE DRAWINGS AND ALL MATERIAL CONTAINED HEREIN ARE THE PROPERTY OF SILVERCREEK INDUSTRIES, INC (SCI Inc) AND SHALL NOT BE REPRODUCED, COPIED OR OTHERWISE DISPOSED OF DIRECTLY OR INDIRECTLY AND SHALL NOT BE USED IN WHOLE OR IN PART TO ASSIST IN THE MAKING OF OR FOR THE PURPOSE OF FURNISHING ANY INFORMATION FOR THE MAKING OF DRAWINGS, PRINTS, APPARATUS OR PARTS THEREOF WITHOUT THE FULL KNOWLEDGE AND WRITTEN CONSENT OF SCI Inc.
ALL PATENTABLE MATERIAL CONTAINED HEREIN AND ORIGINATING WITH SCI Inc SHALL BE THE PROPERTY OF SCI Inc

SILVER CREEK INDUSTRIES, INC.
"BUILDING FOR THE NEXT GENERATION"
SILVER CREEK
2830 BARRETT AVE. PERRIS, CALIFORNIA 92571
PHONE: 951-943-5393 FAX: 951-943-2211

PROJECT NAME:

24x40 STOCKPILE OFFICE BUILDING

SHEET TITLE:

PROJECT SPECIFIC SCHEDULES

LICENSED ARCHITECT
No. C-33667
REN: 01-31-2019
STATE OF CALIFORNIA

ARCHITECT OF RECORD SUBMISSION DATE

FILE #: 15-6
IDENTIFICATION STAMP
DIV. OF THE STATE ARCHITECT
OFFICE OF REGULATION SERVICES
03-118270
AC FLS SS
DATE NOV - 8 2017
TRACKING #: 63221-290

PROJECT SPECIFIC STATE AGENCY APPROVAL

IDENTIFICATION STAMP
DIV. OF THE STATE ARCHITECT
04 118282
ACS FLS SS RAF
DATE MAY 18 2017

ORIGINAL PC STATE AGENCY APPROVAL

REVISIONS
1
2
3
4
5
6
7
8

SILVER CREEK INDUSTRIES

PROJECT NO:	10914
DRAWN BY:	
SCALE:	AS NOTED
DATE:	04-20-17

SHEET NUMBER

A-0.2N

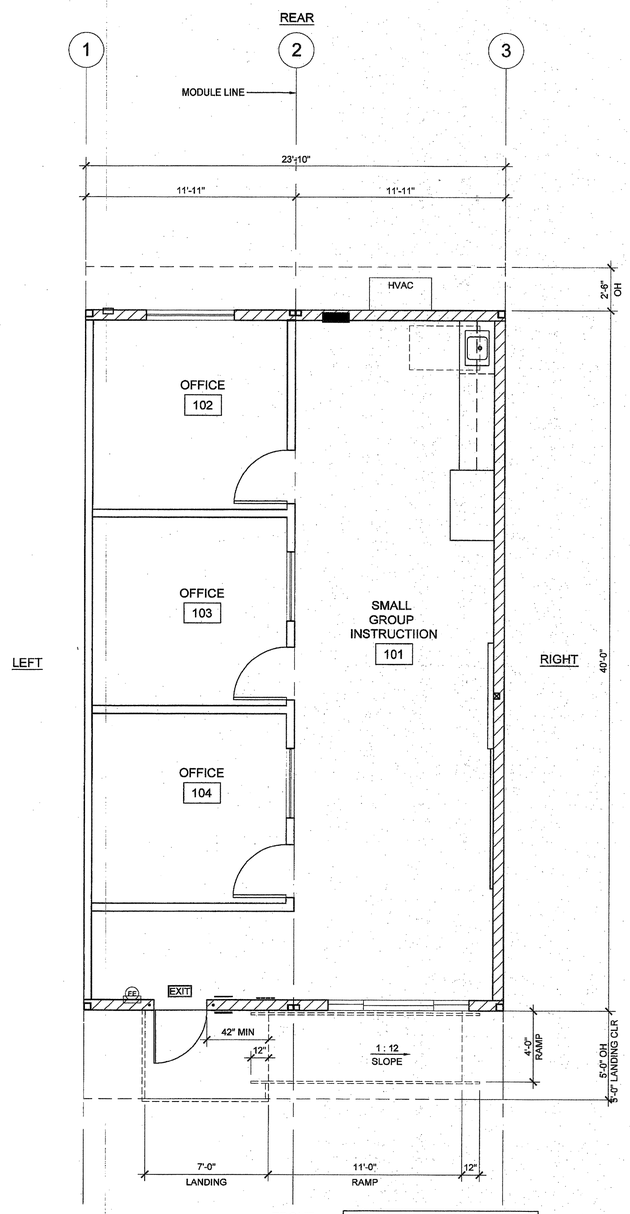

NOTE;
SEE RIGHT HAND FLOOR PLAN FOR NOTES, DIMENSIONS AND CALLOUTS NOT SHOWN.

OPTIONAL LEFT HAND FLOOR PLAN

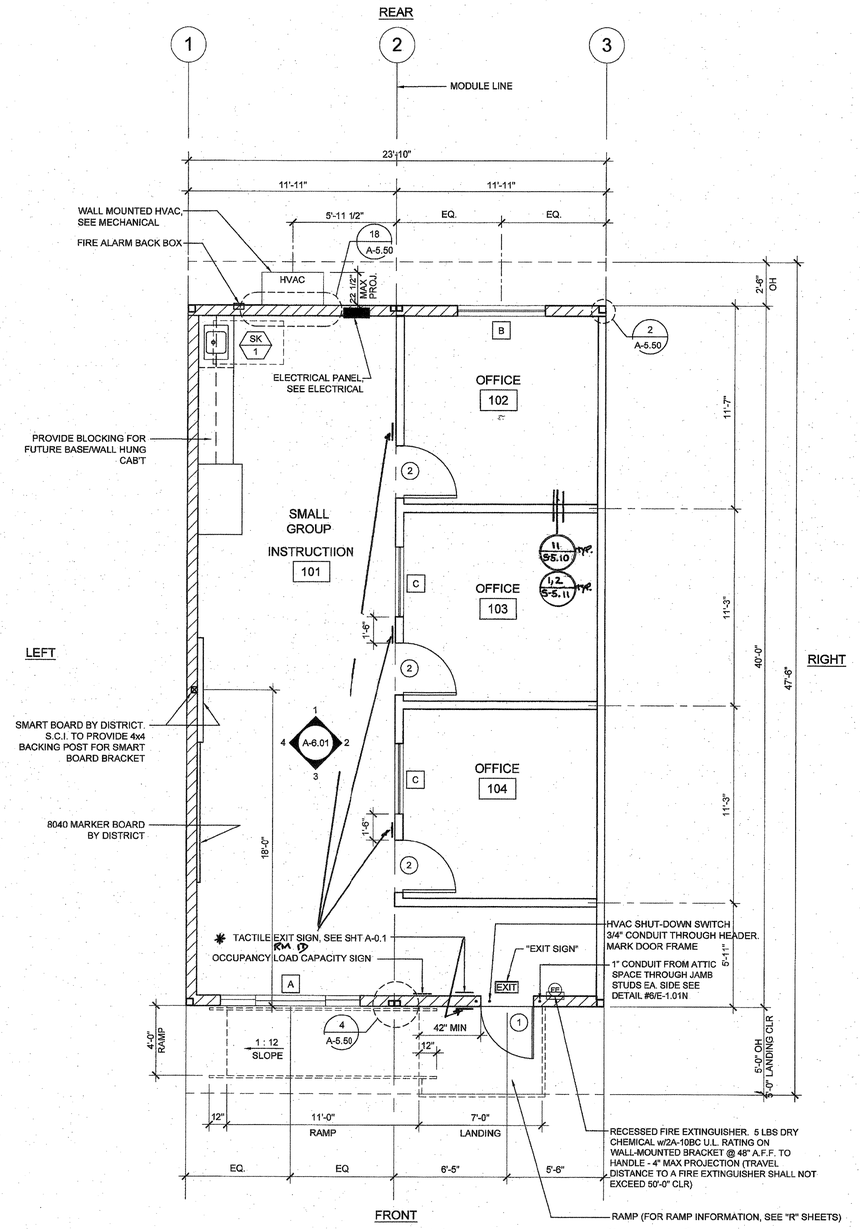

*INDICATE TEXT TO READ:
"EXIT RAMP DOWN IF INSTALLED WITH RAMP"

RIGHT HAND FLOOR PLAN

WALL LEGEND

- NOMINAL 4" WALL STUD
- NOMINAL 6" WALL STUD
- NOMINAL 8" WALL STUD
- A WINDOW PER SCHEDULE SHEET A-0.2N
- # DOOR PER SCHEDULE SHEET A-0.2N

SYMBOLS LEGEND

- 60" CIRCLE CLEAR SPACE
- 30"x48" CLEAR SPACE

*REFER TO T/P-1.01 - PROVIDE MIN. 19" TOE CLEARANCE DEPTH RATHER THAN 17" SHOWN IN DTL.

PLUMBING FIXTURE SCHEDULE

SYMBOL	FIXTURE	COLD WATER	HOT WATER	WASTE	VENT
* SK 1	CLASSROOM SINK	1/2"	-	2"	2"
	FIXTURE DESCRIPTION (AS CALLED OR APPROVED EQUAL)				
SK 1	ELKAY PSDKADQ2517C STAINLESS STEEL SINK W/ CENTER FAUCET HOLE; HAWS 5054LF DRINKING FOUNTAIN BUBBLER; HAWS 5510LF GOOSENECK FAUCET; AQUA PURE WATER FILTER AP717; PROVIDE COMPLETE ASSEMBLY FOR SINK INSTALLATION INCLUDING BRASSCRAFT ANGLE STOPS, BRASSCRAFT COPPER FAUCET RISER, BRASSCRAFT SPEEDI-PLUMB PLUS BRAIDED CONNECTOR, P-TRAP,				

PLUMBING SCHEDULE

THESE DRAWINGS AND ALL MATERIAL CONTAINED HEREIN ARE THE PROPERTY OF SILVERCREEK INDUSTRIES, INC (SCI Inc) AND SHALL NOT BE REPRODUCED, COPIED OR OTHERWISE DISPOSED OF DIRECTLY OR INDIRECTLY AND SHALL NOT BE USED IN WHOLE OR IN PART TO ASSIST IN THE MAKING OF OR FOR THE PURPOSE OF FURNISHING ANY INFORMATION FOR THE MAKING OF DRAWINGS, PRINTS, APPARATUS OR PARTS THEREOF WITHOUT THE FULL KNOWLEDGE AND WRITTEN CONSENT OF SCI Inc.
ALL PATENTABLE MATERIAL CONTAINED HEREIN AND ORIGINATING WITH SCI Inc SHALL BE THE PROPERTY OF SCI Inc

SILVER CREEK INDUSTRIES, INC.
"BUILDING FOR THE NEXT GENERATION"
SILVER CREEK
2830 BARRETT AVE. PERRIS, CALIFORNIA 92571
PHONE: 951-943-5393 FAX: 951-943-2211

PROJECT NAME:

24x40 STOCKPILE OFFICE BUILDING

SHEET TITLE:

PROJECT SPECIFIC FLOOR PLAN

LICENSED ARCHITECT
JOSEPH E. BURNETT
No. C-33467
REN: 01-31-2019
STATE OF CALIFORNIA

ARCHITECT OF RECORD SUBMISSION DATE
FILE # 15-6
IDENTIFICATION STAMP
DIV. OF THE STATE ARCHITECT
OFFICE OF REGULATION SERVICES
03-118270
AC ___ FLS ___ SS DL
DATE NOV - 8 2017
TRACKING # 63221-290

PROJECT SPECIFIC STATE AGENCY APPROVAL
IDENTIFICATION STAMP
DIV. OF THE STATE ARCHITECT
04 116284
ACS DD FLS ___ SS RAF
DATE MAY 18 2017

ORIGINAL PC STATE AGENCY APPROVAL

REVISIONS
1
2
3
4
5
6
7
8

SILVER CREEK INDUSTRIES

PROJECT NO:	10914
DRAWN BY:	
SCALE:	AS NOTED
DATE:	04-20-17

SHEET NUMBER
A-1.01N

FLOOR PLAN

SCALE: 1/4" = 1'-0"

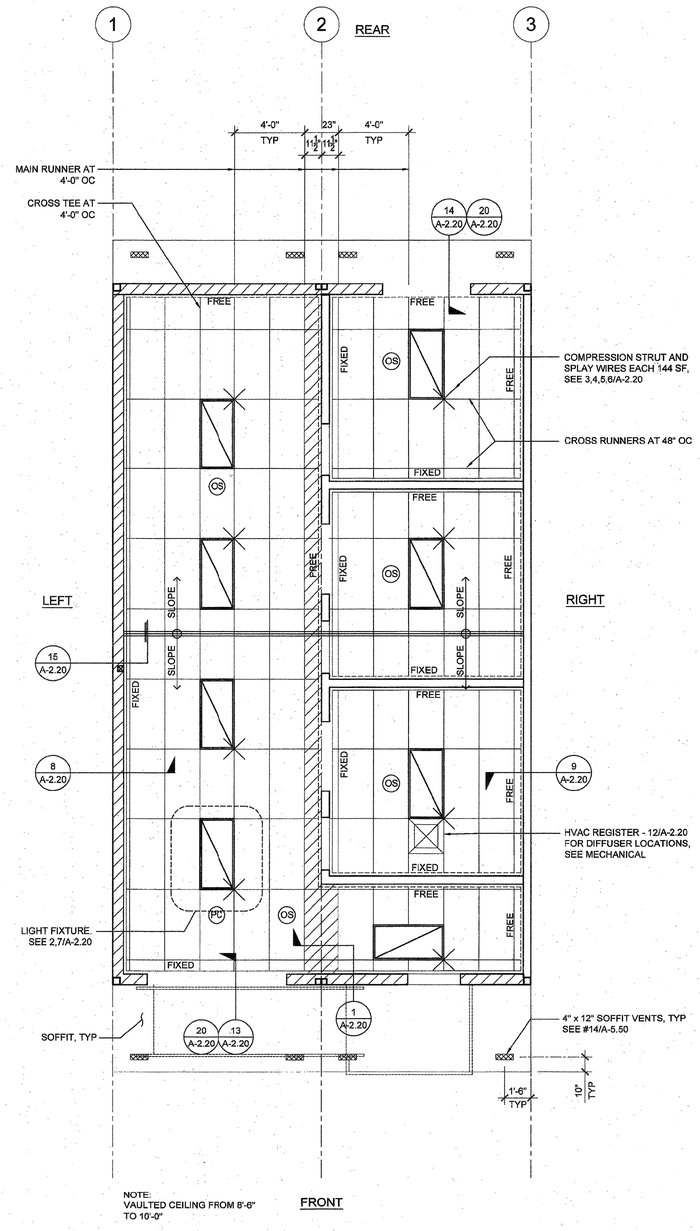

NOTE:
VAULTED CEILING FROM 8'-6" TO 10'-0"

REFLECTED CEILING PLAN

SCALE: 1/4" = 1'- 0" | 1

THESE DRAWINGS AND ALL MATERIAL CONTAINED HEREIN ARE THE PROPERTY OF SILVERCREEK INDUSTRIES, INC (SCI Inc) AND SHALL NOT BE REPRODUCED, COPIED OR OTHERWISE DISPOSED OF DIRECTLY OR INDIRECTLY AND SHALL NOT BE USED IN WHOLE OR IN PART TO ASSIST IN THE MAKING OF OR FOR THE PURPOSE OF FURNISHING ANY INFORMATION FOR THE MAKING OF DRAWINGS, PRINTS, APPARATUS OR PARTS THEREOF WITHOUT THE FULL KNOWLEDGE AND WRITTEN CONSENT OF SCI Inc.
ALL PATENTABLE MATERIAL CONTAINED HEREIN AND ORIGINATING WITH SCI Inc SHALL BE THE PROPERTY OF SCI Inc

SILVER CREEK INDUSTRIES, INC.
"BUILDING FOR THE NEXT GENERATION"
SILVER CREEK
2830 BARRETT AVE. PERRIS, CALIFORNIA 92571
PHONE: 951-943-5393 FAX: 951-943-2211

PROJECT NAME:

24x40 STOCKPILE OFFICE BUILDING

SHEET TITLE:

PROJECT SPECIFIC REFELECTED CEILING

LICENSED ARCHITECT
No. C-33487
REN: 01-31-2018
STATE OF CALIFORNIA

ARCHITECT OF RECORD SUBMISSION DATE

FILE #: 15-6
IDENTIFICATION STAMP
DIV. OF THE STATE ARCHITECT
OFFICE OF REGULATION SERVICES
03-118270
AC FLS SS 01
DATE NOV - 8 2017
TRACKING #: 63221-290

PROJECT SPECIFIC STATE AGENCY APPROVAL

IDENTIFICATION STAMP
DIV. OF THE STATE ARCHITECT
04 116284
ACS FLS SS
DATE MAY - 1 - 2017

ORIGINAL PC STATE AGENCY APPROVAL

REVISIONS

1.
2.
3.
4.
5.
6.
7.
8.

SILVER CREEK INDUSTRIES

PROJECT NO:	10914
DRAWN BY:	
SCALE:	AS NOTED
DATE:	04-20-17

SHEET NUMBER

A-2.11N

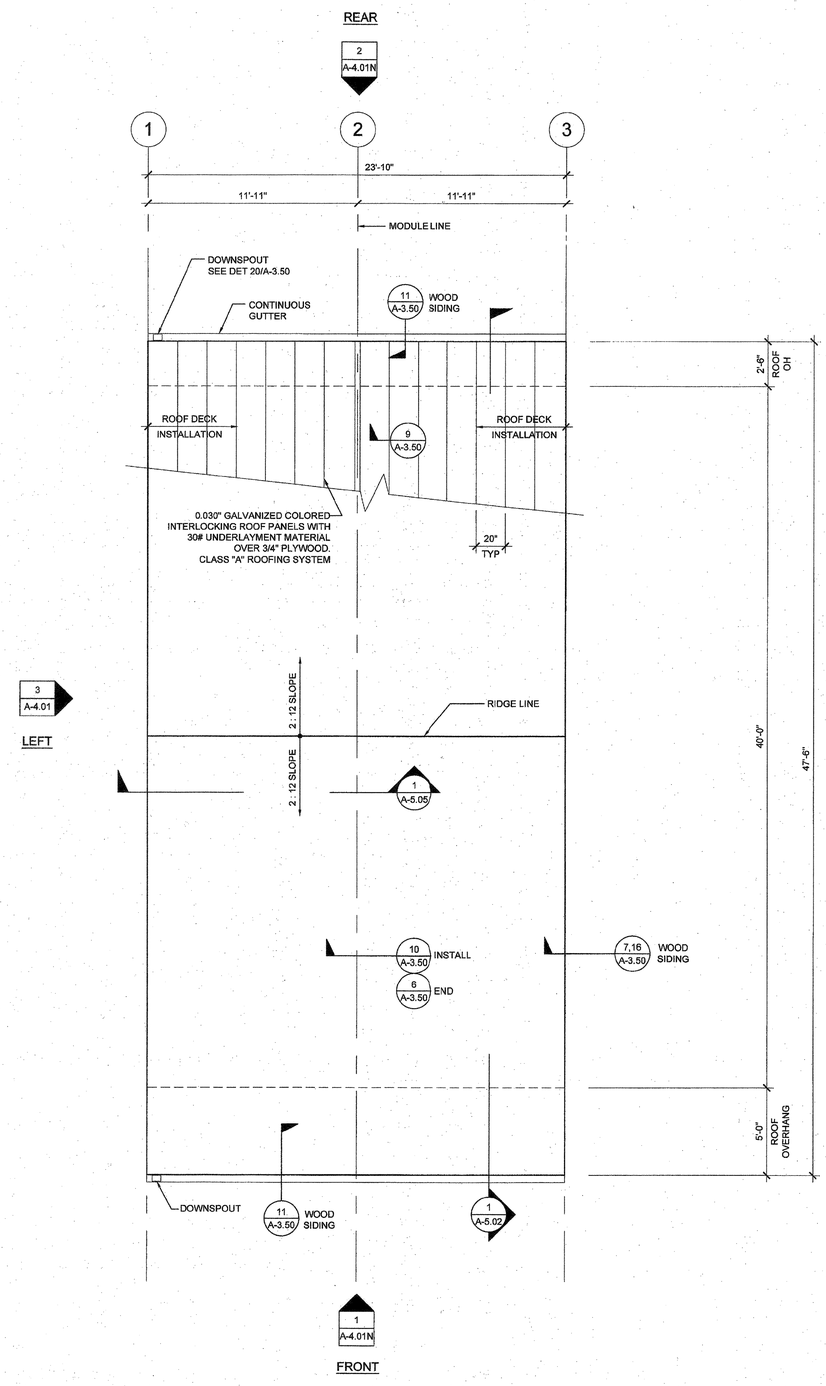

NOTES

1. BUILDINGS SHALL HAVE ROOF COVERINGS AS SPECIFIED IN CBC TABLE 1505.1 - CLASS A.
2. LOCATIONS OF DRAFTSTOP AND/OR FULL HEIGHT PARTITIONS AS REQUIRED PER CBC-718.4.3 SHALL BE SHOWN ON PROJECT SPECIFIC PLANS LOCATED AT MODULE LINES.
3. ALL ROOFTOP EQUIPMENT THAT REQUIRES SERVICE & ROOF ACCESS HATCHES MUST BE A MIN. OF 10'-0" AWAY FROM ALL ROOF EDGES TO OPENING EDGES.
   CBC 2016 SECTIONS 1015.6 & 1015.7.
4. FOR SPECIFIC DOWNSPOUT LOCATIONS FOR VARIOUS BUILDING SIZES, SEE KEY PLANS ON SHEET A-0.3.
   LOCATE ONE (1) DOWNSPOUT FOR EVERY THREE (3) MODULES (TYP)
5. ANY BUILDING OVER 3,000 SQ/FT REQUIRES A DRAFT STOP UNLESS BUILDING IS EQUIPPED WITH FIRE SPRINKLERS.
6. WHEN PARAPETS ARE REQUIRED BECAUSE OF FIRE SEPARATION REQUIREMENTS AND/OR PROJECT SPECIFICATIONS, PROVIDE PARAPET PER CBC SECT. 705.11.

THESE DRAWINGS AND ALL MATERIAL CONTAINED HEREIN ARE THE PROPERTY OF SILVERCREEK INDUSTRIES, INC (SCI Inc) AND SHALL NOT BE REPRODUCED, COPIED OR OTHERWISE DISPOSED OF DIRECTLY OR INDIRECTLY AND SHALL NOT BE USED IN WHOLE OR IN PART TO ASSIST IN THE MAKING OF OR FOR THE PURPOSE OF FURNISHING ANY INFORMATION FOR THE MAKING OF DRAWINGS, PRINTS, APPARATUS OR PARTS THEREOF WITHOUT THE FULL KNOWLEDGE AND WRITTEN CONSENT OF SCI Inc.
ALL PATENTABLE MATERIAL CONTAINED HEREIN AND ORIGINATING WITH SCI Inc SHALL BE THE PROPERTY OF SCI Inc

SILVER CREEK INDUSTRIES, INC.
"BUILDING FOR THE NEXT GENERATION"
SILVER CREEK
2830 BARRETT AVE. PERRIS, CALIFORNIA 92571
PHONE: 951-943-5393 FAX: 951-943-2211

PROJECT NAME:

24x40 STOCKPILE OFFICE BUILDING

SHEET TITLE:

PROJECT SPECIFIC ROOF PLAN
24'x40' - 0.030" METAL DECK

LICENSED ARCHITECT
No. C-33467
REN: 01-31-2019
STATE OF CALIFORNIA

ARCHITECT OF RECORD SUBMISSION DATE
FILE #: 15-8
IDENTIFICATION STAMP
DIV. OF THE STATE ARCHITECT
OFFICE OF REGULATION SERVICES
03-118270
AC. ___ FLS. ___ SS. CL
DATE NOV - 9 2017
TRACKING #: 63221-290

PROJECT SPECIFIC STATE AGENCY APPROVAL
IDENTIFICATION STAMP
DIV. OF THE STATE ARCHITECT
04 116284
ACS ___ FLS ___ SS RAF
DATE MAY 08 2017

ORIGINAL PC STATE AGENCY APPROVAL

REVISIONS
1
2
3
4
5
6
7
8

SILVER CREEK INDUSTRIES

PROJECT NO:	10914
DRAWN BY:	
SCALE:	AS NOTED
DATE:	04-20-17

SHEET NUMBER
A-3.01N

ROOF PLAN - 0.018" METAL DECK - DUAL SLOPE

SCALE: 1/4" = 1' - 0" | 1

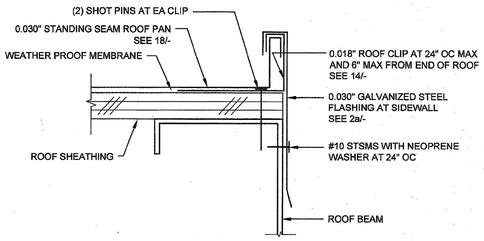

ROOF FLASHING AT SIDEWALL SCALE : 6"=1'-0" 16

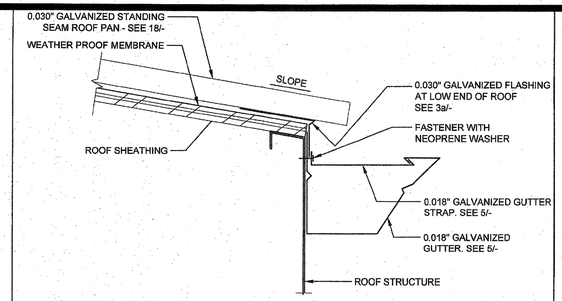

GUTTER AT ROOF FASCIA BEAM SCALE : 3"=1'-0" 11

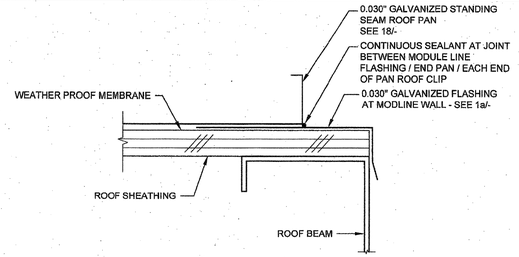

END ROOF PAN CONNECTION SCALE : 6"=1'-0" 6

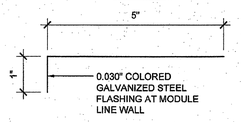

FLASHING AT MODULE LINE WALL SCALE : 6"=1'-0" 1a

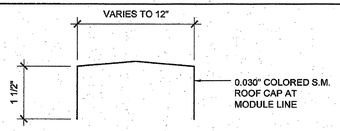

0.018" ROOF CAP AT MODULE LINE SCALE : 6"=1'-0" 1b

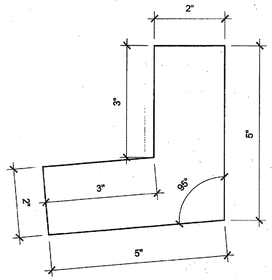

DOWNSPOUT ATTACHMENT SCALE : 6"=1'-0" 17

12

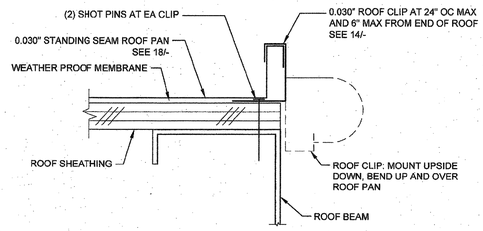

STARTER ROOF PAN CONNECTION SCALE : 6"=1'-0" 7

NOT USED 2b

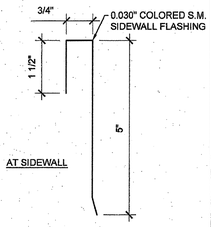

ROOF FLASHING SCALE : 6"=1'-0" 2a

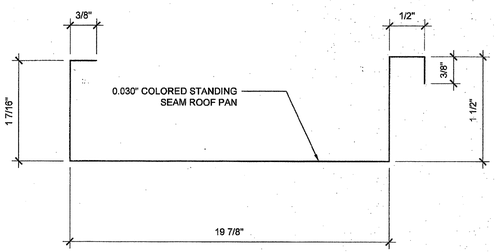

ROOF DECK PROFILE SCALE : 6"=1'-0" 18

13

8

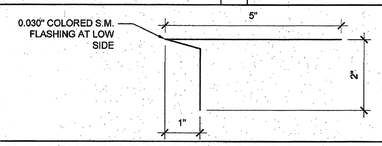

FLASHING AT ROOF LOW SIDE(S) SCALE : 6"=1'-0" 3a

NOT USED 3b

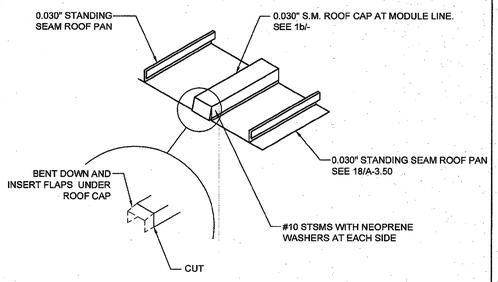

MODULE LINE ROOF CAP SCALE : NTS 19

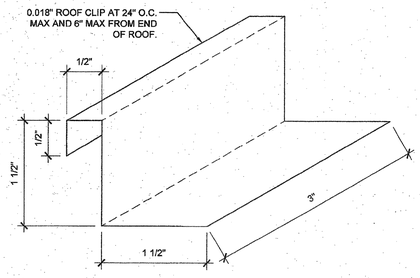

ROOF CLIP SCALE : 1'-0"=1'-0" 14

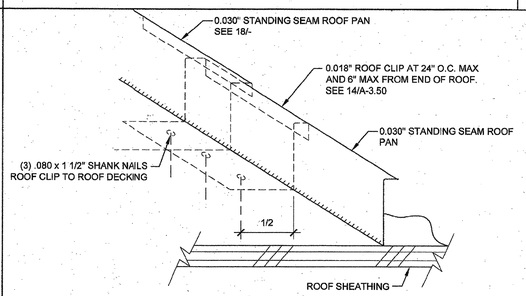

ROOF STANDING SEAM SCALE : NTS 9

4

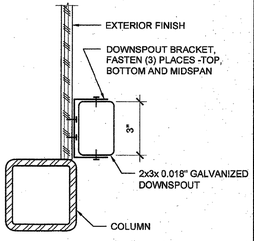

DOWNSPOUT ATTACHMENT SCALE : 3"=1'-0" 20

15

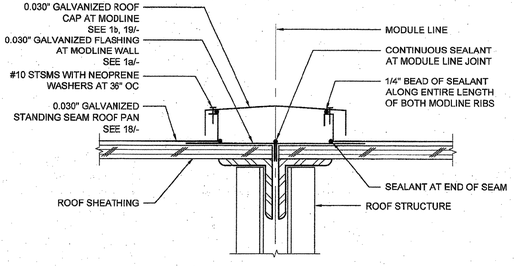

MODULE LINE ROOF CAP - 0.030" ROOF SCALE : 3"=1'-0" 10

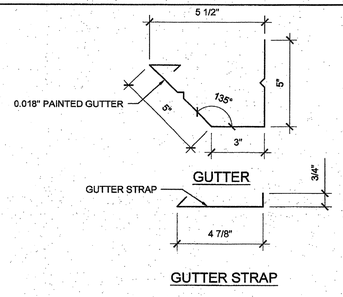

0.018" GUTTER AND GUTTER STRAP SCALE : 3"=1'-0" 5

THESE DRAWINGS AND ALL MATERIAL CONTAINED HEREIN ARE THE PROPERTY OF SILVERCREEK INDUSTRIES, INC (SCI Inc) AND SHALL NOT BE REPRODUCED, COPIED OR OTHERWISE DISPOSED OF DIRECTLY OR INDIRECTLY AND SHALL NOT BE USED IN WHOLE OR IN PART TO ASSIST IN THE MAKING OF OR FOR THE PURPOSE OF FURNISHING ANY INFORMATION FOR THE MAKING OF DRAWINGS, PRINTS, APPARATUS OR PARTS THEREOF WITHOUT THE FULL KNOWLEDGE AND WRITTEN CONSENT OF SCI Inc.
ALL PATENTABLE MATERIAL CONTAINED HEREIN AND ORIGINATING WITH SCI Inc SHALL BE THE PROPERTY OF SCI Inc

SILVER CREEK INDUSTRIES, INC.
"BUILDING FOR THE NEXT GENERATION"
SILVER CREEK
2830 BARRETT AVE. PERRIS, CALIFORNIA 92571
PHONE: 951-943-5393 FAX: 951-943-2211

PROJECT NAME:

24x40 STOCKPILE OFFICE BUILDING

SHEET TITLE:

PROJECT SPECIFIC ROOF DETAILS 0.030 STANDING SEAM ROOF DECK

LICENSED ARCHITECT
No. C-33487
REN: 01-31-2019
STATE OF CALIFORNIA

ARCHITECT OF RECORD SUBMISSION DATE

FILE #: 15-6

IDENTIFICATION STAMP
DIV. OF THE STATE ARCHITECT
OFFICE OF REGULATION SERVICES
03-118270
AC FLS SS CL
DATE NOV - 8 2017
TRACKING #: 63221-290

PROJECT SPECIFIC STATE AGENCY APPROVAL

IDENTIFICATION STAMP
DIV. OF THE STATE ARCHITECT
04 116284
ACS FLS SS RAF
DATE MAY 08 2017

ORIGINAL PC STATE AGENCY APPROVAL

REVISIONS

1
2
3
4
5
6
7
8

SILVER CREEK INDUSTRIES

PROJECT NO:	10914
DRAWN BY:	
SCALE:	AS NOTED
DATE:	04-20-17

SHEET NUMBER

A-3.50N

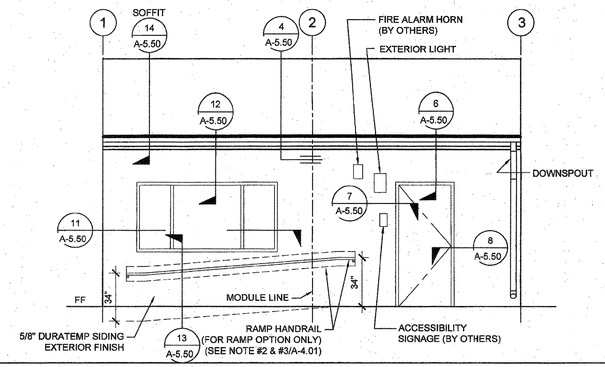

PAINT FINISH NOTE
EXTERIOR SIDING - FLAT
EXTERIOR TRIM - SEMI GLOSS
EXTERIOR DOORS AND FRAMES - GLOSS
GUTTERS & DOWNSPOUTS - SEMI GLOSS

EXTERIOR ELEVATIONS - FRONT - DUAL SLOPE

SCALE: 1/4" = 1' - 0" | 1

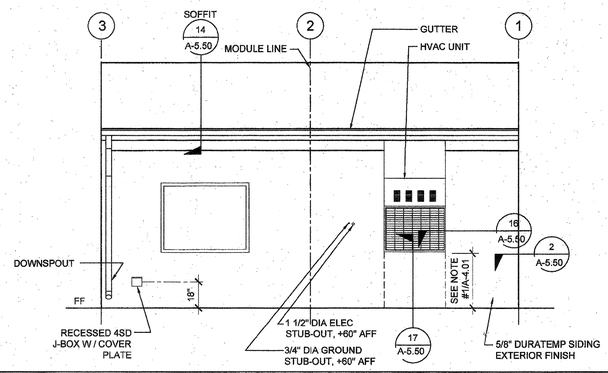

EXTERIOR ELEVATIONS - REAR - DUAL SLOPE

SCALE: 1/4" = 1' - 0" | 2

SCALE: 1/4" = 1' - 0" | 3

SCALE: 1/4" = 1' - 0" | 4

THESE DRAWINGS AND ALL MATERIAL CONTAINED HEREIN ARE THE PROPERTY OF SILVERCREEK INDUSTRIES, INC (SCI Inc) AND SHALL NOT BE REPRODUCED, COPIED OR OTHERWISE DISPOSED OF DIRECTLY OR INDIRECTLY AND SHALL NOT BE USED IN WHOLE OR IN PART TO ASSIST IN THE MAKING OF OR FOR THE PURPOSE OF FURNISHING ANY INFORMATION FOR THE MAKING OF DRAWINGS, PRINTS, APPARATUS OR PARTS THEREOF WITHOUT THE FULL KNOWLEDGE AND WRITTEN CONSENT OF SCI Inc.
ALL PATENTABLE MATERIAL CONTAINED HEREIN AND ORIGINATING WITH SCI Inc SHALL BE THE PROPERTY OF SCI Inc

SILVER CREEK INDUSTRIES, INC.
"BUILDING FOR THE NEXT GENERATION"
SILVER CREEK
2830 BARRETT AVE. PERRIS, CALIFORNIA 92571
PHONE: 951-943-5393 FAX: 951-943-2211

PROJECT NAME:

24x40 STOCKPILE OFFICE BUILDING

SHEET TITLE:

PROJECT SPECIFIC EXTERIOR ELEVATIONS

LICENSED ARCHITECT
No. C-33457
REN: 01-31-2019
STATE OF CALIFORNIA

ARCHITECT OF RECORD SUBMISSION DATE

FILE #: 15-8
IDENTIFICATION STAMP
DIV. OF THE STATE ARCHITECT
OFFICE OF REGULATION SERVICES
03-118270
AC FLS SS
DATE NOV 2 2017
TRACKING #: 63221-290

PROJECT SPECIFIC STATE AGENCY APPROVAL

IDENTIFICATION STAMP
DIV. OF THE STATE ARCHITECT
04 116284
ACS FLS SS RAE
DATE MAY 18 2017

ORIGINAL PC STATE AGENCY APPROVAL

REVISIONS
1
2
3
4
5
6
7
8

SILVER CREEK INDUSTRIES

PROJECT NO:	10914
DRAWN BY:	
SCALE:	AS NOTED
DATE:	04-20-17

SHEET NUMBER

A-4.01N

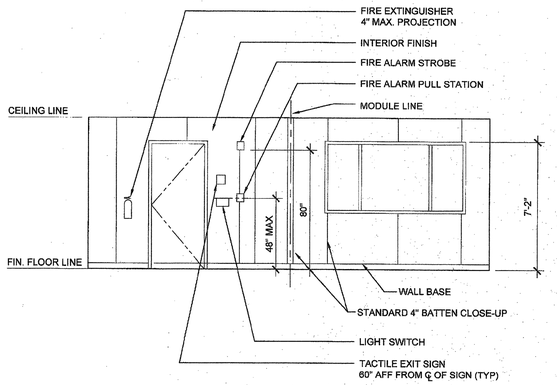

INTERIOR ELEVATION SCALE: 1/4" = 1' - 0" 3

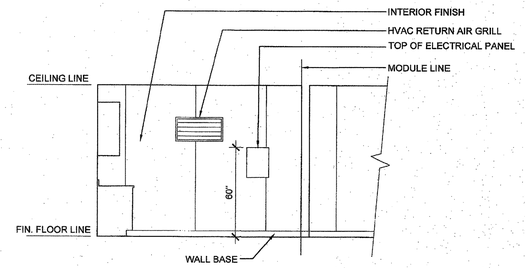

INTERIOR ELEVATION SCALE: 1/4" = 1' - 0" 1

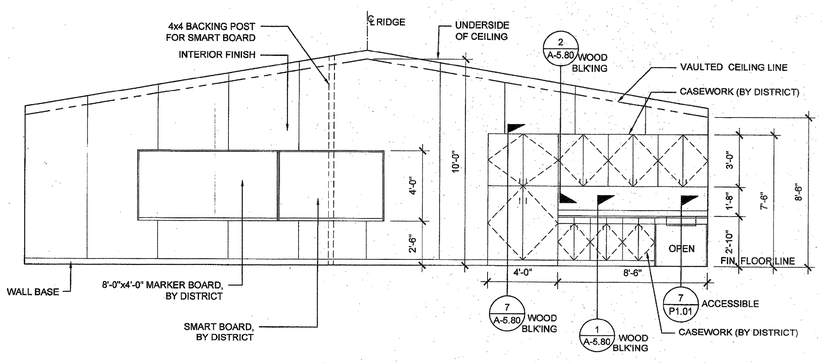

INTERIOR ELEVATION SCALE: 1/4" = 1' - 0" 4

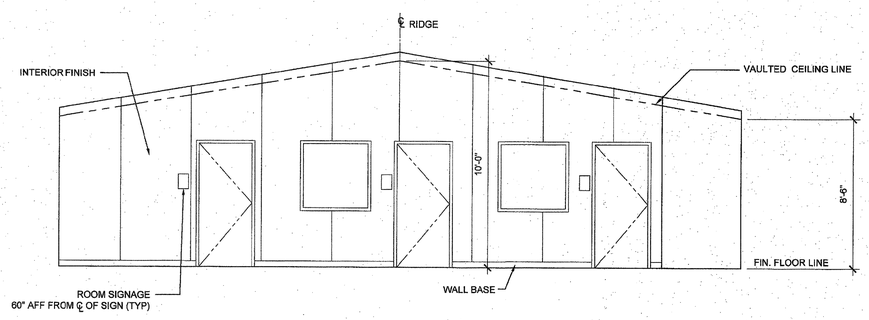

INTERIOR ELEVATION SCALE: 1/4" = 1' - 0" 2

THESE DRAWINGS AND ALL MATERIAL CONTAINED HEREIN ARE THE PROPERTY OF SILVERCREEK INDUSTRIES, INC (SCI Inc) AND SHALL NOT BE REPRODUCED, COPIED OR OTHERWISE DISPOSED OF DIRECTLY OR INDIRECTLY AND SHALL NOT BE USED IN WHOLE OR IN PART TO ASSIST IN THE MAKING OF OR FOR THE PURPOSE OF FURNISHING ANY INFORMATION FOR THE MAKING OF DRAWINGS, PRINTS, APPARATUS OR PARTS THEREOF WITHOUT THE FULL KNOWLEDGE AND WRITTEN CONSENT OF SCI Inc.
ALL PATENTABLE MATERIAL CONTAINED HEREIN AND ORIGINATING WITH SCI Inc SHALL BE THE PROPERTY OF SCI Inc

SILVER CREEK INDUSTRIES, INC.
"BUILDING FOR THE NEXT GENERATION"
SILVER CREEK
2830 BARRETT AVE. PERRIS, CALIFORNIA 92571
PHONE: 951-943-5393 FAX: 951-943-2211

PROJECT NAME:

24x40 STOCKPILE OFFICE BUILDING

SHEET TITLE:

PROJECT SPECIFIC INTERIOR ELEVATIONS

LICENSED ARCHITECT
No. C-33457
REN: 01-31-2019
STATE OF CALIFORNIA

ARCHITECT OF RECORD
SUBMISSION DATE
FILE #: 15-6
IDENTIFICATION STAMP
DIV. OF THE STATE ARCHITECT
OFFICE OF REGULATION SERVICES
03-118270
AC FLS SS
DATE NOV - 8 2017
TRACKING #: 53221-290

PROJECT SPECIFIC STATE AGENCY APPROVAL
IDENTIFICATION STAMP
DIV. OF THE STATE ARCHITECT
04 118284
ACS FLS SS RAF
DATE MAY 1 8 2017

ORIGINAL PC STATE AGENCY APPROVAL

REVISIONS
1
2
3
4
5
6
7
8

SILVER CREEK INDUSTRIES

PROJECT NO:	10914
DRAWN BY:	
SCALE:	AS NOTED
DATE:	04-20-17

SHEET NUMBER

A-6.01N

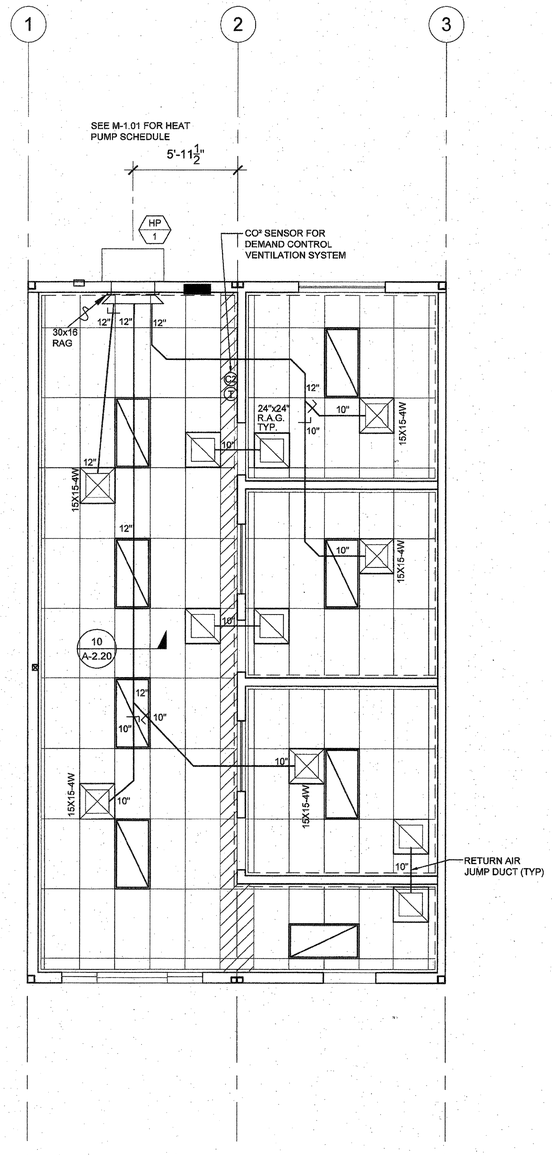

NOTE:
PROVIDE ECONOMIZER W/ HVAC UNIT.

SEE M-1.01 FOR MECHANICAL SCHEDULE

THESE DRAWINGS AND ALL MATERIAL CONTAINED HEREIN ARE THE PROPERTY OF SILVERCREEK INDUSTRIES, INC (SCI Inc) AND SHALL NOT BE REPRODUCED, COPIED OR OTHERWISE DISPOSED OF DIRECTLY OR INDIRECTLY AND SHALL NOT BE USED IN WHOLE OR IN PART TO ASSIST IN THE MAKING OF OR FOR THE PURPOSE OF FURNISHING ANY INFORMATION FOR THE MAKING OF DRAWINGS, PRINTS, APPARATUS OR PARTS THEREOF WITHOUT THE FULL KNOWLEDGE AND WRITTEN CONSENT OF SCI Inc.
ALL PATENTABLE MATERIAL CONTAINED HEREIN AND ORIGINATING WITH SCI Inc SHALL BE THE PROPERTY OF SCI Inc

SILVER CREEK INDUSTRIES, INC.
"BUILDING FOR THE NEXT GENERATION"
SILVER CREEK
2830 BARRETT AVE. PERRIS, CALIFORNIA 92571
PHONE: 951-943-5393 FAX: 951-943-2211

PROJECT NAME:

24x40 STOCKPILE OFFICE BUILDING

SHEET TITLE:

PROJECT SPECIFIC MECHANICAL PLAN

LICENSED ARCHITECT
No. C-33487
REN: 01-31-2019
STATE OF CALIFORNIA

ARCHITECT OF RECORD SUBMISSION DATE

FILE #: 15-6
IDENTIFICATION STAMP
DIV. OF THE STATE ARCHITECT
OFFICE OF REGULATION SERVICES
03-118270
AC ___ FLS ___ SS CL
DATE NOV 9 2017
TRACKING #: 63521-2958

PROJECT SPECIFIC STATE AGENCY APPROVAL

IDENTIFICATION STAMP
DIV. OF THE STATE ARCHITECT
04 116284
ACS ___ FLS ___ SS RMP
DATE MAY 11 2017

ORIGINAL PC STATE AGENCY APPROVAL

REVISIONS

1
2
3
4
5
6
7
8

SILVER CREEK INDUSTRIES

PROJECT NO:	10914
DRAWN BY:	
SCALE:	AS NOTED
DATE:	04-20-17

SHEET NUMBER

M-1.01N

MECHANICAL PLAN

SCALE: 1/4" = 1' - 0"

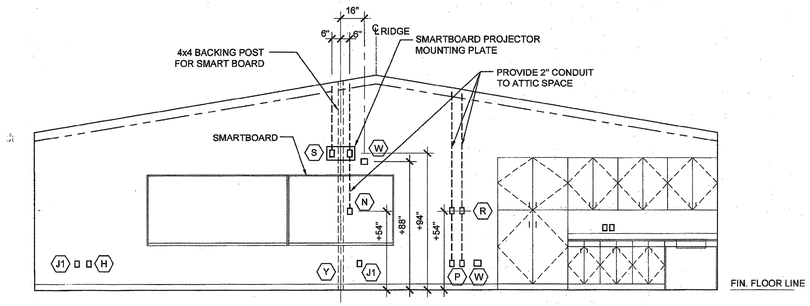

SMART BOARD WALL ELEVATION

SCALE: 1/4" = 1'-0" | 5

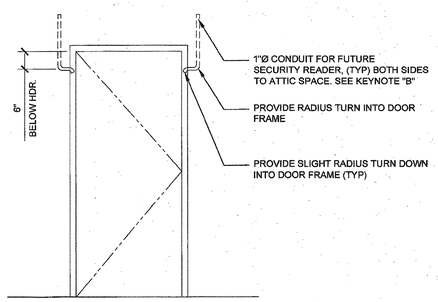

DOOR CONDUIT DETAIL

SCALE: 1/2" = 1'-0" | 6

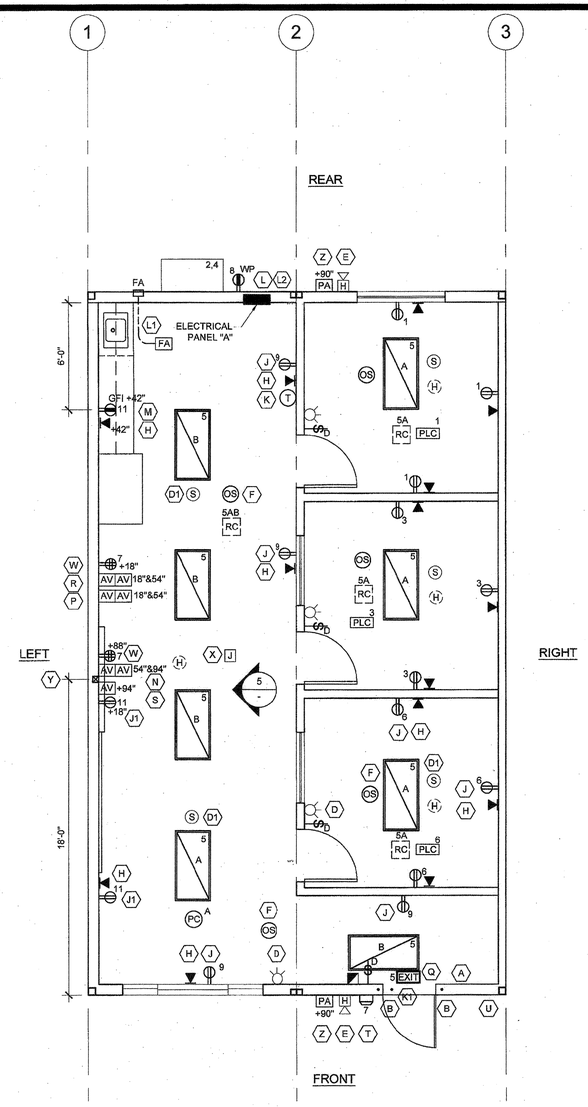

ELECTRICAL PLAN

SCALE: 1/4" = 1'-0" | 3

PANEL: A	PHASE:			VOLTS:		BUSS:			MAIN:					LOCATION:		FEED:				MOUNTING:
S/N:	SINGLE			120/208		200 AMP			200 AMP					INTERIOR		REAR				RECESSED
OBJECT	WAT	NO.		WATTS				WIRE	CKT		CKT	WIRE				WATTS			WAT	OBJECT
DESCRIPTION	PER	OF	LCL	A	B	BRK	POLE	SIZE	NO	A	B	NO	SIZE	POLE	BRK	A	B	LCL	NO OF PER	DESCRIPTION
RECEPTS	180	3		540		20	1	#12	1	X		2	#6	2	60	6032			1 6032	4 TON HP
RECEPTS	180	3			540	20	1	#12	3		X	4	#6	/	/		6032		1 6032	4 TON HP
INT. LIGHTS	56	8	x	448		20	1	#12	5	X		6	#12	1	20	540			3 180	RECEPTS
QUAD RECEPTS	360	2			720	20	1	#12	7		X	8	#12	1	20		180		1 180	EXT RECEPT
RECEPTS	180	4		720		20	1	#12	9	X		10	#12	1	20	150			1 150	FIRE ALARM
RECEPTS	180	3			540	20	1	#12	11		X	12	#12	1	20		30	x	1 30	EXT. LIGHT
				0					13	X		14				0				
					0				15		X	16					0			
				0					17	X		18				0				
					0				19		X	20					0			
	LEG TOTALS			1708	1800											6722	6242	LEG TOTALS		
LCL=119.5+16472=16591.5																				
TOTAL WATTS=16591.5									LEG BALANCE = 2.4%							TOTAL AMPS: 79.77				

ELECTRICAL PANEL

4

KEYNOTE REFERENCE

Refer to floor plan(s) indicating the locations of following items.

A – Recessed cabinet Fire Extinguisher – Install at +48" from floor.
B – Provide 1" conduit to from attic to 6" below header. Sweep through king stud and trimmer into void area of door jamb for future door lock controls. Provide slight turn down once into jamb area.
~~C – Provide surge protected duplex outlet for future IDF cabinet. Locate as indicated on floor plan. Provide circuit in electrical panel as indicated on plan.~~
D – J-Box only (Horn/Strobe) – Install 4" sq. J-box (4" sq. x 2-1/8" deep) at +80" from floor. ¾" conduit stubbed above Ceiling. Box shall be mounted flush with interior wall finish.
D1 – J-box only (Smoke detector) – Install 4S box with 3/0 plaster ring flush with t-bar ceiling / hard lid surface. (Install per DSA approved PC plans)
E – J-Box only (Exterior fire horn/speaker) – Install 4" sq. J-box (4" sq. x 2-1/8" deep) at +90" from floor. ¾" conduit stubbed above Ceiling. Box shall be mounted flush with exterior wall finish.
F – Ceiling mounted occupancy sensor. ~~Acuity brand, model #CMR9 PDT.~~
~~G – Install p.v.c. drain at sink area with p.v.c. vent pipe up in wall. Daylight vent through roof and drain through wall just above bottom plate. Do not install water supply line.~~
H – J-box only (Data outlet) – ¾" conduit stubbed above Ceiling.
J – Standard duplex outlet location. Provide circuits in electrical panel as indicated on plan. These locations indicated on the plans are the only locations where outlets are required. Please do not deviate.
J1 - Standard surge protected duplex outlet location. Provide circuits in electrical panel as indicated on plan. These locations indicated on the plans are the only locations where outlets are required. Please do not deviate.
~~J2 – J-Box only (future power). Provide conduit raceway to electrical panel. No wires or outlet at this time.~~
K – J-Box only (T-Stat). BCSD will provide T-stat. Please note that the control wire for the HVAC unit will need to be factory installed from the unit to the j-box for future inclusion of standard District t-stats.
K1 – Provide time delayed HVAC shut down door switch. Intent is to shut down HVAC unit if door is left open too long.
L – Power and ground entrances to the relos need to be accomplished by adding a conduit nipple for the ground and power wires at the rear of the panels through the wall and finish.
L1 – 4S box with 1" conduit into attic space to 4S deep box for fire alarm cable.
L2 – Provide ¾" conduit from electrical panel to attic for future grounding purposes.
M - G.F.I. receptacle. Mount as indicated on plan at cabinet location. Mount at standard height in classroom areas. Provide circuit in electrical panel as indicated on plan.
N - Single gang deep mud ring. Locate at +94" above finish floor. Single gang deep mud ring. Locate at +54" above finish floor. Provide 2" conduit anchored to framing between mud rings and 2" conduit from top mud ring to above ceiling. No hard connections at mud rings. Provide pull string.
P - Double gang deep mud ring. Locate at +54" above finish floor. Single gang deep mud ring. Locate at standard mounting height. Provide 2" conduit anchored to framing between mud rings and 2" conduit from top mud ring to above ceiling. No hard connections at mud rings. Provide pull string.
Q – Install electric lighted exit sign with battery backup.
R – Single gang deep mud ring. Locate at +54" above finish floor. Single gang deep mud ring. Locate at standard mounting height. Provide 2" conduit anchored to framing between mud rings and 2" conduit from top mud ring to above ceiling. No hard connections at mud rings. Provide pull string.
S – Single gang deep mud ring at +94" above finish floor. Provide 2" conduit anchored to framing from mud ring to above ceiling. No hard connection at mud ring. Provide pull string.
T – Exterior light fixture with built in photo cell. RAB Lighting Slim 18 with photocell.
U - Provide and install Trimco #1254 wall mounted stop/door holder at +76".
V - Provide additional rectangular opening ay transverse roof beams for future data conduits.
W - Wall mounted surge protected quadplex outlet. Locate at +88" above finish floor and 16" from center of smart board. Provide circuit in electrical panel as indicated on plan.
X - Provide single gang box with ceiling mounting bracket at center of room in T-bar ceiling.
Y - Provide 4x4 backing post at center of room for smart board bracket.
Z - J-box only (Exterior PA system speaker) Install at +90" from floor.

KEYNOTES

1

NOTE:
1. SEE SHEET E-1.01 FOR ADDITIONAL NOTES AND LEGENDS NOT SHOWN HERE.
2. PROVIDE STAINLESS STEEL COVER PLATES FOR RECEPTACLES AND DATA OUTLETS.

2x4 CEILING RECESSED LIGHT, LED LIGHT FIXTURE WITH DIMMING, ORACLE OT-LED SERIES MODEL # OT-LED-6000L-DIM10-MVOLT-40K-85-A12 WATTAGE: 56 WATTS

WALLPACK LIGHT FIXTURE 'RAB LIGHTING' SLIM 18 W/ PHOTOCELL

QUADPLEX (WALL MOUNTED) RECEPTACLE 15A - 125V - 3 WIRE. MOUNT AT +18" AFF U.O.N. TO CENTERLINE OF DEVICE

4S J-BOX (DATA OUTLET) W/ 3/4" CONDUIT STUBBED ABOVE CEILING

PLC — WATTSTOPPER #LMPL-101 PLUG LOAD CONTROLLER INSTALLED ABOVE CEILING. 1/2 OF DUPLEX RECEPTACLE WITHIN ROOM CONTROLLED BY ROOM OCCUPANCY SENSOR. OCCURS AT OFFICE AREA ONLY,

FA — 4S BOX WITH 1" CONDUIT INTO ATTIC SPACE TO 4S DEEP BOX FOR FIRE ALARM CABLE

AV — DOUBLE OR SINGLE GANG DEEP MUD RING. HEIGHT PER PLAN. PROVIDE 2" CONDUIT ANCHORED TO FRAMING BETWEEN MUD RINGS AND 2" CONDUIT FROM TOP MUD RING TO ABOVE CEILING. NO HARD CONNECTIONS AT MUD RINGS. PROVIDE PULL STRING.

PA — 4S J-BOX W/ 3/4" CONDUIT TO ATTIC (EXTERIOR PA SYSTEM SPEAKER) INSTALL AT +90" A.F.F.

ELECTRICAL LEGEND

2

THESE DRAWINGS AND ALL MATERIAL CONTAINED HEREIN ARE THE PROPERTY OF SILVERCREEK INDUSTRIES, INC (SCI Inc) AND SHALL NOT BE REPRODUCED, COPIED OR OTHERWISE DISPOSED OF DIRECTLY OR INDIRECTLY AND SHALL NOT BE USED IN WHOLE OR IN PART TO ASSIST IN THE MAKING OF OR FOR THE PURPOSE OF FURNISHING ANY INFORMATION FOR THE MAKING OF DRAWINGS, PRINTS, APPARATUS OR PARTS THEREOF WITHOUT THE FULL KNOWLEDGE AND WRITTEN CONSENT OF SCI Inc.
ALL PATENTABLE MATERIAL CONTAINED HEREIN AND ORIGINATING WITH SCI Inc SHALL BE THE PROPERTY OF SCI Inc

SILVER CREEK INDUSTRIES, INC.
"BUILDING FOR THE NEXT GENERATION"
SILVER CREEK
2830 BARRETT AVE. PERRIS, CALIFORNIA 92571
PHONE: 951-943-5393 FAX: 951-943-2211

PROJECT NAME:

24x40 STOCKPILE OFFICE BUILDING

SHEET TITLE:

PROJECT SPECIFIC ELECTRICAL PLAN

LICENSED ARCHITECT — STEVEN E. WHITELEY — No. C-33467 — REN: 01-31-2019 — STATE OF CALIFORNIA

ARCHITECT OF RECORD SUBMISSION DATE
FILE #: 15-6
IDENTIFICATION STAMP
DIV. OF THE STATE ARCHITECT
OFFICE OF REGULATION SERVICES
03-118270
AC ACS FLS SS STC
DATE NOV 4 2017
TRACKING #: 63221-290

PROJECT SPECIFIC STATE AGENCY APPROVAL
IDENTIFICATION STAMP
DIV. OF THE STATE ARCHITECT
04 118284
ACS FLS SS RAF
DATE MAY 18 2017

ORIGINAL PC STATE AGENCY APPROVAL

REVISIONS
1
2
3
4
5
6
7
8

SILVER CREEK INDUSTRIES

PROJECT NO:	10914
DRAWN BY:	
SCALE:	AS NOTED
DATE:	04-20-17

SHEET NUMBER

E-1.01N

MODULAR CLASSROOM BUILDINGS
BUILDING SIZE: 24' X 40'
EXPANDABLE TO 120' X 40'
2:12 ROOF SLOPE
PC 04-114102

BY

SILVER CREEK INDUSTRIES, INC.
2830 BARRETT AVE, PERRIS, CALIFORNIA 92571
PHONE : (951) 943-5393 FAX : (951) 943-2211

GENERAL NOTES

1. FIRE ALARM IS NOT PART OF THIS APPROVAL
2. ALLOWABLE AREA IS BASED ON 10' SET BACK FROM IMAGINARY ASSUMED LINE PER 2013 CBC 705.3
3. THIS PC IS DESIGNED STRUCTURALLY TO SUPPORT THE WEIGHT OF A FIRE SPRINKLER SYSTEM.
4. PC IS DESIGNED AS A SINGLE STORY MODULAR BUILDING
5. FOR SOILS TYPES / DESIGN BEARING STRENGTH, SEE STRUCTURAL SPECIFICATIONS
6. ALL WORK SHALL CONFORM TO TITLE 24, CALIFORNIA CODE OF REGULATIONS (CCR)
7. THIS PC IS NOT APPROVED FOR "A" OCCUPANCY USES
8. EXTERIOR WALL OPENINGS TO COMPLY W/ 705.8, 2013 CBC.
9. EXTERIOR PROJECTIONS ARE TO BE FIRE PROTECTED WHERE REQUIRED BY SECTIONS 705.2 & 1406.
10. SEE SHEETS A-0.7 FOR REQUIRED BUILDING ENVELOPE ASSEMBLIES AND HVAC SYSTEM.
11. PURSUANT TO D.S.A. APPROVAL ALL PRODUCTS CAN BE SUBSTITUTED BY AN "EQUAL"
12. BUILDING(S) TO BE LOCATED IN ANY FIRE HAZARD SEVERITY ZONE OR ANY WILDLAND - URBAN INTERFACE FIRE AREA SHALL COMPLY WITH CBC CHAPTER 7A.
13. WHEN THE PRE-CHECKED BUILDING IS SITE ADAPTED, THE BUILDING AND SITE FEATURES NEED TO COMPLY WITH CALGREEN CODE, SECTION 5.507.4 FOR THE SITE SPECIFIC LOCATION
14. IN THE EVENT THAT A PC CLASSROOM IS DESIGNED TO CONNECT TO THE SAME PC CLASSROOM, INTERIOR SOUND TRANSMISSION IN THE INTERIOR ADJOINING WALL AND FLOOR-CEILING SHALL MEET THE MINIMUM REQUIREMENTS OF THE STC RATING OF 40 PER CALGREEN CODE, SECTION 5.507.4.3.

APPLICABLE STANDARDS

NFPA 13 AUTOMATIC SPRINKLER SYSTEMS (CALIF AMENDED) 2013 EDITION
NFPA 72 NAT. FIRE ALARM CODE (CALIF. AMENDED) 2013 EDITION
(NOTE: SEE UL STANDARD 1971 FOR "VISUAL DEVICES")

APPLICABLE CODES

LIST OF 2013 CALIFORNIA CODE OF REGULATIONS

2013 CALIFORNIA ADMINISTRATIVE CODE (CAC), PART 1, TITLE 24 C.C.R.
2013 CALIFORNIA BUILDING CODE (CBC), PART 2, TITLE 24 C.C.R.
(2012 INTERNATIONAL BUILDING CODE VOLUMES 1-2 AND 2013 CALIFORNIA AMENDMENTS)
2013 CALIFORNIA ELECTRICAL CODE (CEC), PART 3, TITLE 24 C.C.R.
(2011 NATIONAL ELECTRICAL CODE AND 2013 CALIFORNIA AMENDMENTS)
2013 CALIFORNIA MECHANICAL CODE (CMC), PART 4, TITLE 24 C.C.R.
(2012 UNIFORM MECHANICAL CODE AND 2013 CALIFORNIA AMENDMENTS)
2013 CALIFORNIA PLUMBING CODE (CPC), PART 5, TITLE 24 C.C.R.
(2012 UNIFORM PLUMBING CODE AND 2013 CALIFORNIA AMENDMENTS)
2013 CALIFORNIA ENERGY CODE (CEC), PART 6, TITLE 24 C.C.R.
2013 CALIFORNIA FIRE CODE, PART 9, TITLE 24 C.C.R.
(2012 INTERNATIONAL FIRE CODE AND 2013 CALIFORNIA AMENDMENTS)
2013 CALIFORNIA GREEN BUILDING STANDARDS CODE, PART 11, TITLE 24 C.C.R.
2013 CALIFORNIA REFERENCED STANDARDS, PART 12, TITLE 24 C.C.R.
TITLE 19 C.C.R., PUBLIC SAFETY, STATE FIRE MARSHAL REGULATIONS.
2007 ASME A17.1 (w/A17.1a/CSA B44a-08 ADDENDA) SAFETY CODE FOR ELEVATORS AND ESCALATORS

BUILDING DATA

NUMBER OF STORIES:	1 - STORY		
OCCUPANCY:	E: 24' - 120' x 40' BUILDINGS (LECTURE CLASSROOM)		
TYPE OF CONSTRUCTION:	VB		
FLOOR LIVE LOAD:	☐ 50 PSF	☐ 50+15 PSF PARTITION LOAD	
	☑ 100 PSF	☐ 150 PSF	
ROOF LIVE LOAD:	☑ 20 PSF	☐ 40 PSF SNOW LOAD	
FLOOR DEAD LOAD:	☑ WOOD FLOOR - 8 PSF	☐ CONC FLOOR - 33 PSF	
ROOF DEAD LOAD:	17 PSF (INCLUDING SPRINKLER LOAD)		
RAMP LIVE LOAD:	100 PSF		
BUILDING AREA: (AREA WITHOUT OVERHANGS / AREA WITH OVERHANGS)	☑ 24'x40' BLDG - 960 SF/1140 SF		☐ 84'x40' BLDG - 3360 SF/3990 SF
	☐ 36'x40' BLDG - 1440 SF/1710 SF		☐ 96'x40' BLDG - 3840 SF/4560 SF
	☐ 48'x40' BLDG - 1920 SF/2280 SF		☐ 108'x40' BLDG - 4320 SF/5130 SF
	☐ 60'x40' BLDG - 2400 SF/2850 SF		☐ 120'x40' BLDG - 4800 SF/5700 SF
	☐ 72'x40' BLDG - 2880 SF/3420 SF		
ALLOWABLE AREA = 9000 SF			
FOUNDATION:	☑ WOOD	☐ CONCRETE	
CEC CLIMATE ZONES:	1- 16		

WIND DESIGN DATA SECTION 1603A.1.4

1. BASIC WIND SPEED, 3 SEC GUST (MPH) :	Vult=130 MPH/Vasd=100 MPH/Kzt = 1.0"		
2. RISK CATEGORY :			II
3. WIND EXPOSURE :			"C"
4. APPLICABLE INTERNAL PRESSURE COEFFICIENT :			± 0.18
5. COMPONENTS AND CLADDING : (STRENGTH LEVEL, PSF)			
ZONE 1 =	38.5	ZONE 4 =	38.1
ZONE 2 =	64.5	ZONE 5 =	46.9
ZONE 3 =	97.1		

EARTHQUAKE DESIGN DATA SECTION 1603A.1.5

1. SEISMIC IMPORTANCE FACTOR :			1
2. MAPPED SPECTRAL RESPONSE :			
S_S = 1.875 (FOR BASE SHEAR)		S_1 = 0.675	
S_s = 2.14 (FOR ARCHITECTURAL COMPONENTS)			
3. SITE CLASS			D
4. SPECTRAL RESPONSE COEFFICIENTS :			
S_{DS} = 1.0		S_{D1} = 0.675	
5. SEISMIC DESIGN CATEGORY :			D
6. BASIC SEISMIC-FORCE-RESISTING-SYSTEM :			STEEL OMF
7. DESIGN BASE SHEAR (kips) :			
CONC FLOOR	PLY FLOOR	LL<100	LL=150
X		X		22.91
	X	X		16.05
X			X	31.15
	X		X	24.29
8. SEISMIC RESPONSE COEFFICIENT, Cs :			0.286
9. RESPONSE MODIFICATION FACTOR, R :			3.5
10. ANALYSIS PROCEDURE USED :			EQUIVALENT LATERAL FORCE
11. MINIMUM SEISMIC SEPARATION FROM OTHER EXISTING OR FUTURE BUILDINGS			6" SEP.

SNOW DESIGN DATA SECTION 1603A.1.3

1. GROUND SNOW LOAD	Pg = 40 PSF
2. FLAT ROOF SNOW LOAD	Pf = 28 PSF
3. SNOW EXPOSURE FACTOR	Ce = 1.0
4. SNOW LOAD IMPORTANCE FACTOR	I = 1.0
5. THERMAL FACTOR	Ct = 1.0

SHEET INDEX

SHT NO.	ARCHITECTURAL
A-0	COVER SHEET
A-0A	T & I FORMS
~~A-0B~~	~~T & I FORMS~~
A-0.0	BUILDING OPTIONS SCHEDULE
A-0.1	SYMBOLS LEGEND, ABBREVIATION, AND ADA SIGNAGE
A-0.2	SCHEDULES
A-0.3	TYPICAL KEY PLANS - 24' TO 120' x 40'
A-0.5A	ENERGY CALC'S - PRF FORMS - ZONE 14 WORST CASE
A-0.5B	ENERGY CALC'S - PRF FORMS - ZONE 15 WORST CASE
A-0.5C	ENERGY CALC'S - PRF FORMS - ZONE 16 WORST CASE
A-0.6A	ENERGY CALC'S - ELC FORMS - 24' x 40' BUILDINGS
A-0.6B	ENERGY CALC'S - LTO / MCH FORMS - 24' x 40' BUILDINGS
A-0.6C	ENERGY CALC'S - LTI FORMS - 24' x 40' BUILDINGS
A-0.6D	ENERGY CALC'S - ELC FORMS - 120' x 40' BUILDINGS
A-0.6E	ENERGY CALC'S - LTO / MCH FORMS - 120' x 40' BUILDINGS
A-0.6F	ENERGY CALC'S - LTI FORMS - 120' x 40' BUILDINGS
A-0.7	DESIGN ENERGY VALUES BY ZONE & CALGREEN SPECIFICATIONS
A-1.01	FLOOR PLAN - 24' x 40'
~~A-1.02~~	~~FLOOR PLAN - 36'x40'~~
~~A-1.03~~	~~FLOOR PLAN - 48'TO 120'x40'~~
~~A-1.04~~	~~OPTIONAL 12'x40 TOILET MODULE PLANS & ELEVATIONS~~
~~A-1.05~~	~~OPTIONAL 12'x40 TOILET MODULE PLUMBING PLAN & ISOMETRICS~~
~~A-1.06~~	~~OPTIONAL 24'x40 TOILET BUILDING PLANS & ELEVATIONS~~
~~A-1.07~~	~~OPTIONAL 24'x40 TOILET BUILDING PLUMBING PLAN & ISOMETRICS~~
~~A-2.01~~	~~REFLECTED CEILING PLAN - 24'x40'~~
~~A-2.02~~	~~REFLECTED CEILING PLAN - 36'x40'~~
~~A-2.03~~	~~REFLECTED CEILING PLAN - 48'TO 120'x40'~~
A-2.11	REFLECTED CEILING PLAN - 24' x 40' - VAULTED CEILING
~~A-2.12~~	~~REFLECTED CEILING PLAN - 36'x40' - VAULTED CEILING~~
~~A-2.13~~	~~REFLECTED CEILING PLAN - 48'TO 120' x 40' - VAULTED CEILING~~
A-2.20	CEILING DETAILS - T GRID
~~A-2.21~~	~~CEILING DETAILS - HARD LID~~
A-3.01	ROOF PLAN ~~- 0.0428"~~ METAL DECK - DUAL SLOPE - 24' x 40'
~~A-3.02~~	~~ROOF PLAN - 0.0428" METAL DECK - DUAL SLOPE - 36'x40'~~
~~A-3.03~~	~~ROOF PLAN - 0.0428" METAL DECK - DUAL SLOPE - 48'TO 120'x40'~~
~~A-3.11~~	~~ROOF PLAN - 0.0396" METAL DECK - DUAL SLOPE - 24'x40'~~
~~A-3.12~~	~~ROOF PLAN - 0.0396" METAL DECK - DUAL SLOPE - 36'x40'~~
~~A-3.13~~	~~ROOF PLAN - 0.0396" METAL DECK - DUAL SLOPE - 48'TO 120'x40'~~
~~A-3.21~~	~~ROOF PLAN - BUILT UP ROOF - DUAL SLOPE - 24'x40'~~
~~A-3.22~~	~~ROOF PLAN - BUILT UP ROOF - DUAL SLOPE - 36'x40'~~
~~A-3.23~~	~~ROOF PLAN - BUILT UP ROOF - DUAL SLOPE - 48'TO 120'x40'~~
~~A-3.31~~	~~ROOF PLAN - TPO - DUAL SLOPE - 24'x40'~~
~~A-3.32~~	~~ROOF PLAN - TPO - DUAL SLOPE - 36'x40'~~
~~A-3.33~~	~~ROOF PLAN - TPO - DUAL SLOPE - 48'TO 120'x40'~~
A-3.50	ROOF DETAILS - 0.018" STANDING SEAM ROOF DECK
~~A-3.60~~	~~ROOF DETAILS - 0.0428" STANDING SEAM ROOF DECK~~
~~A-3.61~~	~~ROOF DETAILS - 0.0396" STANDING SEAM ROOF DECK~~
~~A-3.70~~	~~ROOF DETAILS - BUILT UP ROOF~~
~~A-3.80~~	~~ROOF DETAILS - TPO ROOF~~
A-4.01	EXTERIOR ELEVATIONS - DUAL SLOPE - 24' x 40'
~~A-4.02~~	~~EXTERIOR ELEVATIONS - DUAL SLOPE - 36'x40'~~
~~A-4.03~~	~~EXTERIOR ELEVATIONS - DUAL SLOPE - 48'TO 120'x40'~~
A-5.02	CROSS SECTION - DUAL SLOPE - 0.018", B.U., OR TPO ROOF DECK
~~A-5.04~~	~~CROSS SECTION - DUAL SLOPE - 0.0428" ROOF DECK~~
A-5.05	CROSS SECTION
A-5.50	ARCHITECTURAL DETAILS - WOOD STUD - WOOD SIDING
~~A-5.51~~	~~ARCHITECTURAL DETAILS - WOOD STUD - PLASTER~~
~~A-5.52~~	~~ARCHITECTURAL DETAILS - WOOD STUD - WOOD SIDING - 1 HOUR RATED~~
~~A-5.53~~	~~ARCHITECTURAL DETAILS - WOOD STUD - PLASTER - 1 HOUR RATED~~
~~A-5.60~~	~~ARCHITECTURAL DETAILS - STEEL STUD - WOOD SIDING~~
~~A-5.61~~	~~ARCHITECTURAL DETAILS - STEEL STUD - PLASTER~~
~~A-5.62~~	~~ARCHITECTURAL DETAILS - STEEL STUD - WOOD SIDING - 1 HOUR RATED~~
~~A-5.63~~	~~ARCHITECTURAL DETAILS - STEEL STUD - PLASTER - 1 HOUR RATED~~
~~A-5.64~~	~~ARCHITECTURAL DETAILS - 1 HOUR RATED OPTIONS~~
A-5.70	ARCHITECTURAL DETAILS - FLOOR
A-5.80	ARCHITECTURAL DETAILS - MISCELLANEOUS/OPTIONS
A-5.81	ARCHITECTURAL DETAILS - MISCELLANEOUS/OPTIONS
A-6.01	INTERIOR ELEVATIONS - 24' x 40'
~~A-6.02~~	~~INTERIOR ELEVATIONS - 36'x40'~~
~~A-6.03~~	~~INTERIOR ELEVATIONS - 48'TO 120'x40'~~

SHT NO.	FOUNDATION
~~F-0.01~~	~~WOOD FOUNDATION PLAN - 24'x40' (50 PSF)~~
~~F-0.02~~	~~WOOD FOUNDATION PLAN - 24'x40' (50 - 10 PSF)~~
F-0.03	WOOD FOUNDATION PLAN - 24' x 40' (100 PSF)
~~F-0.04~~	~~WOOD FOUNDATION PLAN - 24'x40' (150 PSF)~~
~~F-0.11~~	~~WOOD FOUNDATION PLAN - 36'x40' (50 PSF)~~
~~F-0.12~~	~~WOOD FOUNDATION PLAN - 36'x40' (50 45 PSF)~~

SHT NO.	FOUNDATION (CONT.)
~~F-0.13~~	~~WOOD FOUNDATION PLAN - 36'x40' (100 PSF)~~
~~F-0.14~~	~~WOOD FOUNDATION PLAN - 36'x40' (150 PSF)~~
~~F-0.21~~	~~WOOD FOUNDATION PLAN - 48'x40' (50 PSF)~~
~~F-0.22~~	~~WOOD FOUNDATION PLAN - 48'x40' (50 45 PSF)~~
~~F-0.23~~	~~WOOD FOUNDATION PLAN - 48'x40' (100 PSF)~~
~~F-0.24~~	~~WOOD FOUNDATION PLAN - 48'x40' (150 PSF)~~
F-0.50	FOUNDATION DETAILS - WOOD
~~F-1.01~~	~~CONCRETE FOUNDATION PLAN - ABOVE GRADE - WOOD FLOOR~~
~~F-1.11~~	~~CONCRETE FOUNDATION PLAN - ABOVE GRADE - CONCRETE FLOOR~~
~~F-1.50~~	~~CONCRETE FOUNDATION DETAILS - ABOVE GRADE~~
~~F-2.01~~	~~CONCRETE FOUNDATION PLAN - BELOW GRADE - WOOD FLOOR~~
~~F-2.11~~	~~CONCRETE FOUNDATION PLAN - BELOW GRADE - CONCRETE FLOOR~~
~~F-2.50~~	~~CONCRETE FOUNDATION DETAILS - BELOW GRADE~~
~~F-9.51~~	~~FOUNDATION DETAILS - CONCRETE~~

SHT NO.	STRUCTURAL
S-0.1	STRUCTURAL SPECIFICATIONS
S-1.01	FLOOR FRAMING PLAN - WOOD FLOOR
~~S-1.11~~	~~FLOOR FRAMING PLAN - CONCRETE FLOOR~~
S-1.50	FLOOR FRAMING DETAILS - WOOD FLOOR
~~S-1.60~~	~~FLOOR FRAMING DETAILS - CONCRETE FLOOR~~
S-2.11	ROOF FRAMING PLAN - 0.018", BUILT UP, OR TPO ROOF - 20 PSF
~~S-2.12~~	~~ROOF FRAMING PLAN - 0.0428" - 20 PSF~~
~~S-2.13~~	~~ROOF FRAMING PLAN - 0.018", BUILT UP, OR TPO - 40 PSF SNOW LOAD~~
~~S-2.14~~	~~ROOF FRAMING PLAN - 0.0428" - 40 PSF SNOWLOAD~~
S-2.51	ROOF FRAMING DETAILS - DUAL SLOPE
S-2.60	ROOF FRAMING DETAILS
S-3.02	BUILDING SECTION - DUAL SLOPE ROOF
~~S-3.04~~	~~BUILDING SECTION - 0.0428" DUAL SLOPE ROOF~~
S-5.00	WALL FRAMING ELEVATIONS - WOOD STUDS
S-5.10	WALL FRAMING DETAILS - WOOD STUDS
S-5.11	WALL FRAMING DETAILS - WOOD STUDS
S-5.12	WALL FRAMING OPENING SCHEDULE / WOOD STUDS
~~S-5.20~~	~~WALL FRAMING ELEVATIONS - STEEL STUDS~~
~~S-5.30~~	~~WALL FRAMING DETAILS - STEEL STUDS~~
~~S-5.31~~	~~WALL FRAMING DETAILS - STEEL STUDS~~

SHT NO.	PLUMBING
P-1.01	PLUMBING DETAILS AND SCHEDULE

SHT NO.	MECHANICAL
M-0.1	MECHANICAL NOTES, SCHEDULES, AND DETAILS
M-1.01	MECHANICAL PLAN - WALL MOUNT - 24' x 40'
~~M-1.02~~	~~MECHANICAL PLAN - WALL MOUNT - 36'x40'~~
~~M-1.03~~	~~MECHANICAL PLAN - WALL MOUNT - 48'TO 120'x40'~~
~~M-2.01~~	~~MECHANICAL PLAN - ROOF MOUNT - 24'x40'~~
~~M-2.02~~	~~MECHANICAL ROOF PLAN - ROOF MOUNT - 24'x40'~~
~~M-2.03~~	~~MECHANICAL PLAN - ROOF MOUNT - 36'x40'~~
~~M-2.04~~	~~MECHANICAL ROOF PLAN - ROOF MOUNT - 36'x40'~~
~~M-2.05~~	~~MECHANICAL PLAN - ROOF MOUNT - 48'x40'~~
~~M-2.06~~	~~MECHANICAL ROOF PLAN - ROOF MOUNT - 48'x40'~~
~~M-2.07~~	~~MECHANICAL PLAN - ROOF MOUNT - 48'TO 120'x40'~~
~~M-2.08~~	~~MECHANICAL ROOF PLAN - ROOF MOUNT - 48'TO 120'x40'~~

SHT NO.	ELECTRICAL
E-1.01	ELECTRICAL PLAN - 24' x 40'
~~E-1.02~~	~~ELECTRICAL PLAN - 36'x40'~~
~~E-1.03~~	~~ELECTRICAL PLAN - 48'TO 120'x40'~~

SHT NO.	RAMP
R-1.01	STANDARD RAMP PLAN
~~R-1.02~~	~~OFFSET RAMP PLAN~~
~~R-1.03~~	~~RAMP LANDING~~
~~R-1.04~~	~~STANDARD LANDING WITH STEPS~~
~~R-1.05~~	~~SWITCHBACK RAMP PLAN~~
R-2.01	RAMP DETAILS
~~R-9.01~~	~~CONCRETE RAMP~~

SHT NO.	RELOCATABLE SHEETS
~~REL-101~~	~~BUILDING RELOCATION DETAILS~~
~~REL-102~~	~~BUILDING RELOCATION DETAILS~~

SHT NO.	FIRE SPRINKLERS
~~FS-1~~	~~FIRE SPRINKLER COVER SHEET~~
~~FS-2~~	~~TYPICAL FIRE SPRINKLER PLANS~~
~~FS-3~~	~~TYPICAL FIRE SPRINKLER PLANS~~
~~FS-4~~	~~TYPICAL FIRE SPRINKLER PLANS~~
~~FS-5~~	~~TYPICAL FIRE SPRINKLER PLANS~~
~~FS-6~~	~~TYPICAL FIRE SPRINKLER PLANS~~
~~FS-7~~	~~TYPICAL FIRE SPRINKLER PLANS~~

THESE DRAWINGS AND ALL MATERIAL CONTAINED HEREIN ARE THE PROPERTY OF SILVERCREEK INDUSTRIES, INC (SCI Inc) AND SHALL NOT BE REPRODUCED, COPIED OR OTHERWISE DISPOSED OF DIRECTLY OR INDIRECTLY AND SHALL NOT BE USED IN WHOLE OR IN PART TO ASSIST IN THE MAKING OF OR FOR THE PURPOSE OF FURNISHING ANY INFORMATION FOR THE MAKING OF DRAWINGS, PRINTS, APPARATUS OR PARTS THEREOF WITHOUT THE FULL KNOWLEDGE AND WRITTEN CONSENT OF SCI Inc.
ALL PATENTABLE MATERIAL CONTAINED HEREIN AND ORIGINATING WITH SCI Inc SHALL BE THE PROPERTY OF SCI Inc

SILVER CREEK INDUSTRIES, INC.
"BUILDING FOR THE NEXT GENERATION"
SILVER CREEK
2830 BARRETT AVE PERRIS, CALIFORNIA 92571
PHONE: 951-943-5393 FAX: 951-943-2211

PROJECT NAME:

24x40 STOCKPILE OFFICE BUILDING

SHEET TITLE:

COVER SHEET

LICENSED ARCHITECT JAMES SHIVELY III C-33467 REN 01-31-2017 STATE OF CALIFORNIA

ARCHITECT OF RECORD SUBMISSION DATE
FILE #: 15-6
IDENTIFICATION STAMP DIV. OF THE STATE ARCHITECT OFFICE OF REGULATION SERVICES
03-118270
AC FLS SS
DATE NOV - 8 2017
TRACKING #: 63221-290

PROJECT SPECIFIC STATE AGENCY APPROVAL
IDENTIFICATION STAMP DIV. OF THE STATE ARCHITECT
04 116284
AC FLS SS RAF
DATE MAY 18 2017

ORIGINAL PC STATE AGENCY APPROVAL
PRE-CHECK (PC) DOCUMENT bcdc 2013 CBC
A SEPARATE PROJECT APPLICATION IS REQUIRED FOR SITE CONSTRUCTION
IDENTIFICATION STAMP DIV. OF THE STATE ARCHITECT OFFICE OF REGULATION SERVICES
PC 04-114102
AC FLS SS RAF
DATE AUG - 4 2015
AS-J.Schaible 2/4/15
SSO: E.Pierce

REVISIONS
1
2
3
4
5
6
7
8

SILVER CREEK INDUSTRIES
24' x 40' PC - 2:12 PITCH

PROJECT NO:
DRAWN BY:
SCALE: AS NOTED
DATE: 01-30-15

P.C. SHEET NUMBER
A-0

DSA-103 rev 12/20/13

Statement of Structural Tests & Special Inspections - 2013 CBC

INCREMENT # | DSA File No.: | Application No.: | Date Submitted: | Revised: | Revised:

School Name | District

IMPORTANT: This form is only a summary list of structural tests and special inspections required for the project. The actual tests and inspections must be performed as detailed on the DSA approved documents. The project inspector is responsible for providing inspection of all facets of construction, including but not limited to, special inspections not listed on this form such as structural wood framing, high-load wood diaphragms, cold-formed steel framing, anchorage of non-structural components, etc., per Title 24, Part 2, Chapter 17A. NOTE: This form is also available for projects submitted for review under the 2007 and 2010 CBC.

INSTRUCTIONS: Click a plus sign (+) before any category or subcategory to reveal additional tests and special inspections. An "X" before a listed test or inspection indicates it is a mandatory requirement. A shaded box indicates a test or special inspection that may be required, depending on the scope of the construction and other issues. A shaded box can be clicked indicating your selection of that test. Note: A minus (-) on a category or subcategory heading indicates that it can be collapsed. However, any selections you may have made will be cleared. Click on the "COMPILE" button to show only the tests finally selected. For more information on use of this form, see DSA-103.INSTR.

Note: References are to the 2013 edition of the California Building Code (CBC) unless otherwise noted.

REQUIRED	TEST OR SPECIAL INSPECTION	TYPE 1	PERFORMED BY 2	CODE REFERENCE AND NOTES
-	SOILS			
	1. GENERAL:	Table 1705A.6		
X	a. Verify that: • site has been prepared properly prior to placement of controlled fill and/or excavations for foundations, • foundation excavations are extended to proper depth and have reached proper material, and • materials below footings are adequate to achieve the design bearing capacity.	Periodic	GE*	* By geotechnical engineer or his or her qualified representative.
-	2. COMPACTED FILLS:	Table 1705A.6		
X	a. Perform qualification testing of fill materials.	Test	Lab*	* Under the supervision of the geotechnical engineer.
X	b. Verify use of proper materials and inspect lift thicknesses, placement, and compaction during placement of fill.	Continuous	GE*	* By geotechnical engineer or his or her qualified representative.
X	c. Test compaction of fill.	Test	Lab*	* Under the supervision of the geotechnical engineer.
-	CONCRETE	Table 1705A.3		
-	7. CAST IN PLACE CONCRETE			
	Material Verification and Testing:			
X	a. Verify use of required design mix.	Periodic	SI & PI*	* To be performed by batch-plant inspector and project inspector.
X	c. Perform slump, temperature, and (where required) air content tests.	Test	Lab	ASTM C172, ASTM C31.
X	d. Test concrete (compression).	Test	Lab	ACI 318 Section 5.6 and 1905A.1.2 (1913.3.1+). ASTM C39.
	Inspection:			
X	f. Batch plant inspection - design complies with 1705A.3.3 Item 2			
X	g. Inspect placement of formwork, reinforcing steel, embedded items and concrete. Inspect curing and form removal.	Continuous	PI*	* May be performed by a special inspector when specifically approved by DSA.
-	11. POST-INSTALLED ANCHORS:			
X	a. Inspect installation of post-installed anchors	Continuous	SI	Table 1705A.3 * May be performed by the project inspector when specifically approved by DSA.
X	b. Test post-installed anchors.	Test	Lab	1913A.7 (1913.2.11+).
+	MASONRY	TMS 402-11/ACI 530-11/ASCE 5-11 Table 1.19.3		
-	STEEL	Table 1705A.2.1		
-	17. STRUCTURAL STEEL AND COLD-FORMED STEEL USED FOR STRUCTURAL PURPOSES			
	Material Verification:			
X	a. Verify that all materials are appropriately marked and that: • Mill certificates indicate material properties that comply with requirements, • Material sizes, types and grades comply with requirements.	Periodic	*	* By special inspector when performed off-site; by project inspector for steel shipped directly to project site without welding or fabrication.
X	b. Test unidentified materials	Test	Lab	2203A.1 (2203.1+). ASTM A370.
X	c. Examine seam welds of structural tubes and pipes	Periodic	SI*	* DSA IR 17-3.
	Inspection:			
X	d. Verify member locations, bracing and all details constructed in the field.	Continuous	PI	
X	e. Verify stiffener locations, connection tab locations and all construction details fabricated in the shop.	Periodic	SI	
-	19. WELDING:	DSA IR 17-3, AWS D1.1 and AWS D1.8 (AWS D1.3 for cold formed steel).		
	Verification of Materials, Equipment, Welders, etc:			
X	a. Verify weld filler material identification markings per AWS designation listed on the DSA approved documents and the WPS.	Periodic	SI	
X	b. Verify weld filler material manufacturer's certificate of compliance.	Periodic	SI	
X	c. Verify WPS, welder qualifications and equipment.	Periodic	SI	DSA IR 17-3.
-	19.1 SHOP WELDING:			
X	a. Inspect groove, multi-pass, and fillet welds > 5/16"	Continuous	SI	Per AISC 360 (and AISC 341 as applicable). DSA IR 17-3.
X	b. Inspect single-pass fillet welds ≤ 5/16"	Periodic	SI	Per AISC 360 (and AISC 341 as applicable). DSA IR 17-3.
X	c. Inspect welding of stairs and railing systems.	Periodic	SI	1705A.2.2.1 Per AISC 360 (and AISC 341 as applicable). DSA IR 17-3.
-	19.2 FIELD WELDING:[1,2]			
X	a. Inspect groove, multi-pass, and fillet welds > 5/16"	Continuous	SI	Per AISC 360 (and AISC 341 as applicable). DSA IR 17-3.
X	b. Inspect Single-Pass Fillet Welds ≤ 5/16"	Periodic	SI	
X	f. Inspect welding of stairs and railing systems	Periodic	SI*	* May be performed by the project inspector when specifically approved by DSA. DSA IR 17-3. 1705A.2.2.1 and 1705A.2.2.5
-	20. NONDESTRUCTIVE TESTING:[3]			
X	a. Ultrasonic	Test	Lab	AISC 341, App. Q 5.2. AWS D1.1, D1.8.- ANSI/ASNT CP-189, SNT-TC-1A. - ASTM E543,
X	b. Magnetic Particle	Test	Lab	E1444, E164 - DSA IR 17-2.
-	23. OTHER STEEL:			
X	a. SHOP WELDING OF COLD FORMED STEEL	Periodic	SI	
X	b. SHOP WELD, INSPECT WELDING OF STEEL FLOOR DECK WELDS	Periodic	SI	

SUMMARY
1 Soils testing and Inspection: Geotechnical Verified Report - Form DSA-293
2 All Structural Testing: Laboratory Verified Report - Form DSA-291
3 Concrete Batch Plant Inspection: Special Inspection Verified Report - Form DSA-292
4 Shop Welding Inspection: Special Inspection Verified Report - Form DSA-292
5 Field Welding Inspection: Special Inspection Verified Report - Form DSA-292
6 Steel Joist Fabrication Inspection: Special Inspection Verified Report - Form DSA-292

NOTE:
THE DIFFERENCE BETWEEN "TESTS" AND "SPECIAL INSPECTIONS" IS ADDRESSED IN IR 17-4

FOOT NOTES / OPTIONS
1. THIS TEST INSPECTION REQUIREMENT OCCURS AT FIELD WELDING. MOD TO MOD OPTION ONLY. SEE 12/S1.50 OR 12/S1.60
2. THIS TEST INSPECTION REQUIREMENT OCCURS AT FIELD WELDING. BUILDING TO CONCRETE FOUNDATION OPTION ONLY, SEE 2/F1.50 OR 2/F2.50 AND 10/F2.51
3. THIS TEST / INSPECTION IS TBD BY AOR / DSA PER PROJECT SPECIFIC REQUIREMENTS. UT TESTING SHALL BE PERFORMED ON 100% OF CJP GROOVE WELDS WHEN THE COLUMNS PER SCHEDULE ON SHEETS S-3.02 AND S-3.04 HAVE A THICKNESS OF 5/16" OR GREATER. MAGNETIC PARTICLE TESTING SHALL BE PERFORMED ON 25% OF ALL BEAM TO COLUMN CJP GROOVE WELDS

CONSTRUCTION OF (Diaphragm material-foundation material)
CONCRETE FLOOR - CONCRETE FOUNDATION

DSA-103 rev 12/20/13

Statement of Structural Tests & Special Inspections - 2013 CBC

INCREMENT # | DSA File No.: | Application No.: | Date Submitted: | Revised: | Revised:

School Name | District

IMPORTANT: This form is only a summary list of structural tests and special inspections required for the project. The actual tests and inspections must be performed as detailed on the DSA approved documents. The project inspector is responsible for providing inspection of all facets of construction, including but not limited to, special inspections not listed on this form such as structural wood framing, high-load wood diaphragms, cold-formed steel framing, anchorage of non-structural components, etc., per Title 24, Part 2, Chapter 17A. NOTE: This form is also available for projects submitted for review under the 2007 and 2010 CBC.

INSTRUCTIONS: Click a plus sign (+) before any category or subcategory to reveal additional tests and special inspections. An "X" before a listed test or inspection indicates it is a mandatory requirement. A shaded box indicates a test or special inspection that may be required, depending on the scope of the construction and other issues. A shaded box can be clicked indicating your selection of that test. Note: A minus (-) on a category or subcategory heading indicates that it can be collapsed. However, any selections you may have made will be cleared. Click on the "COMPILE" button to show only the tests finally selected. For more information on use of this form, see DSA-103.INSTR.

Note: References are to the 2013 edition of the California Building Code (CBC) unless otherwise noted.

REQUIRED	TEST OR SPECIAL INSPECTION	TYPE 1	PERFORMED BY 2	CODE REFERENCE AND NOTES
-	SOILS			
	1. GENERAL:	Table 1705A.6		
X	a. Verify that: • site has been prepared properly prior to placement of controlled fill and/or excavations for foundations, • foundation excavations are extended to proper depth and have reached proper material, and • materials below footings are adequate to achieve the design bearing capacity.	Periodic	GE*	* By geotechnical engineer or his or her qualified representative.
-	2. COMPACTED FILLS:	Table 1705A.6		
X	a. Perform qualification testing of fill materials.	Test	Lab*	* Under the supervision of the geotechnical engineer.
X	b. Verify use of proper materials and inspect lift thicknesses, placement, and compaction during placement of fill.	Continuous	GE*	* By geotechnical engineer or his or her qualified representative.
X	c. Test compaction of fill.	Test	Lab*	* Under the supervision of the geotechnical engineer.
-	CONCRETE	Table 1705A.3		
-	7. CAST IN PLACE CONCRETE			
	Material Verification and Testing:			
X	a. Verify use of required design mix.	Periodic	SI & PI*	* To be performed by batch-plant inspector and project inspector.
	OKAY to waive testing of reinforcing steel.			IR 17-10
X	c. Perform slump, temperature, and (where required) air content tests.	Test	Lab	ASTM C172, ASTM C31.
X	d. Test concrete (compression).	Test	Lab	ACI 318 Section 5.6 and 1905A.1.2 (1913.3.1+). ASTM C39.
	Inspection:			
X	f. Batch plant inspection - design complies with 1705A.3.3 Item 2	Periodic	SI	1705A.3.3, Item 2. Requires first batch inspection, weighmaster, and batch tickets.
X	g. Inspect placement of formwork, reinforcing steel, embedded items and concrete. Inspect curing and form removal.	Continuous	PI*	* May be performed by a special inspector when specifically approved by DSA.
-	11. POST-INSTALLED ANCHORS:			
X	a. Inspect installation of post-installed anchors	Continuous	SI	Table 1705A.3 * May be performed by the project inspector when specifically approved by DSA.
X	b. Test post-installed anchors.	Test	Lab	1913A.7 (1913.2.11+).
+	MASONRY	TMS 402-11/ACI 530-11/ASCE 5-11 Table 1.19.3		
-	STEEL	Table 1705A.2.1		
-	17. STRUCTURAL STEEL AND COLD-FORMED STEEL USED FOR STRUCTURAL PURPOSES			
	Material Verification:			
X	a. Verify that all materials are appropriately marked and that: • Mill certificates indicate material properties that comply with requirements, • Material sizes, types and grades comply with requirements.	Periodic	*	* By special inspector when performed off-site; by project inspector for steel shipped directly to project site without welding or fabrication.
X	b. Test unidentified materials	Test	Lab	2203A.1 (2203.1+). ASTM A370.
X	c. Examine seam welds of structural tubes and pipes	Periodic	SI*	* DSA IR 17-3.
	Inspection:			
X	d. Verify member locations, bracing and all details constructed in the field.	Continuous	PI	
X	e. Verify stiffener locations, connection tab locations and all construction details fabricated in the shop.	Periodic	SI	
-	19. WELDING:	DSA IR 17-3, AWS D1.1 and AWS D1.8 (AWS D1.3 for cold formed steel).		
	Verification of Materials, Equipment, Welders, etc:			
X	a. Verify weld filler material identification markings per AWS designation listed on the DSA approved documents and the WPS.	Periodic	SI	
X	b. Verify weld filler material manufacturer's certificate of compliance.	Periodic	SI	
X	c. Verify WPS, welder qualifications and equipment.	Periodic	SI	DSA IR 17-3.
-	19.1 SHOP WELDING:			
X	a. Inspect groove, multi-pass, and fillet welds > 5/16"	Continuous	SI	Per AISC 360 (and AISC 341 as applicable). DSA IR 17-3.
X	b. Inspect single-pass fillet welds ≤ 5/16"	Periodic	SI	Per AISC 360 (and AISC 341 as applicable). DSA IR 17-3.
X	c. Inspect welding of stairs and railing systems.	Periodic	SI	1705A.2.2.1 Per AISC 360 (and AISC 341 as applicable). DSA IR 17-3.
-	19.2 FIELD WELDING:[1,2]			
X	a. Inspect groove, multi-pass, and fillet welds > 5/16"	Continuous	SI	Per AISC 360 (and AISC 341 as applicable). DSA IR 17-3.
X	b. Inspect Single Pass Fillet Welds ≤ 5/16"	Periodic	SI	
X	f. Inspect welding of stairs and railing systems	Periodic	SI*	* May be performed by the project inspector when specifically approved by DSA. DSA IR 17-3. 1705A.2.2.1.1 and 1705A.2.2.5
-	20. NONDESTRUCTIVE TESTING:[3]			
X	a. Ultrasonic	Test	Lab	AISC 341, App. Q 5.2. AWS D1.1, D1.8.- ANSI/ASNT CP-189, SNT-TC-1A. - ASTM E543,
X	b. Magnetic Particle	Test	Lab	E1444, E164 - DSA IR 17-2.
-	23. OTHER STEEL:			
X	a. SHOP WELDING OF COLD FORMED STEEL	Periodic	SI	

SUMMARY
1 Soils testing and Inspection: Geotechnical Verified Report - Form DSA-293
2 All Structural Testing: Laboratory Verified Report - Form DSA-291
3 Concrete Batch Plant Inspection: Special Inspection Verified Report - Form DSA-292
4 Shop Welding Inspection: Special Inspection Verified Report - Form DSA-292
5 Field Welding Inspection: Special Inspection Verified Report - Form DSA-292
6 Steel Joist Fabrication Inspection: Special Inspection Verified Report - Form DSA-292

NOTE:
THE DIFFERENCE BETWEEN "TESTS" AND "SPECIAL INSPECTIONS" IS ADDRESSED IN IR 17-4

FOOT NOTES / OPTIONS
1. THIS TEST INSPECTION REQUIREMENT OCCURS AT FIELD WELDING. MOD TO MOD OPTION ONLY. SEE 12/S1.50 OR 12/S1.60
2. THIS TEST INSPECTION REQUIREMENT OCCURS AT FIELD WELDING. BUILDING TO CONCRETE FOUNDATION OPTION ONLY, SEE 2/F1.50 OR 2/F2.50 AND 10/F2.51
3. THIS TEST / INSPECTION IS TBD BY AOR / DSA PER PROJECT SPECIFIC REQUIREMENTS. UT TESTING SHALL BE PERFORMED ON 100% OF CJP GROOVE WELDS WHEN THE COLUMNS PER SCHEDULE ON SHEETS S-3.02 AND S-3.04 HAVE A THICKNESS OF 5/16" OR GREATER. MAGNETIC PARTICLE TESTING SHALL BE PERFORMED ON 25% OF ALL BEAM TO COLUMN CJP GROOVE WELDS

CONSTRUCTION OF (Diaphragm material-foundation material)
PLYWOOD FLOOR - CONCRETE FOUNDATION

2

The example form DSA 103s shown on this sheet are for illustration purposes only. A form DSA 103 is to be completed for each application that this PC is being incorporated into and all example form DSA-103s are to be crossed out on this drawing.

DSA-103 rev 12/20/13

Statement of Structural Tests & Special Inspections - 2013 CBC

INCREMENT # | DSA File No.: | Application No.: | Date Submitted: | Revised: | Revised:

School Name | District

IMPORTANT: This form is only a summary list of structural tests and special inspections required for the project. The actual tests and inspections must be performed as detailed on the DSA approved documents. The project inspector is responsible for providing inspection of all facets of construction, including but not limited to, special inspections not listed on this form such as structural wood framing, high-load wood diaphragms, cold-formed steel framing, anchorage of non-structural components, etc., per Title 24, Part 2, Chapter 17A. NOTE: This form is also available for projects submitted for review under the 2007 and 2010 CBC.

INSTRUCTIONS: Click a plus sign (+) before any category or subcategory to reveal additional tests and special inspections. An "X" before a listed test or inspection indicates it is a mandatory requirement. A shaded box indicates a test or special inspection that may be required, depending on the scope of the construction and other issues. A shaded box can be clicked indicating your selection of that test. Note: A minus (-) on a category or subcategory heading indicates that it can be collapsed. However, any selections you may have made will be cleared. Click on the "COMPILE" button to show only the tests finally selected. For more information on use of this form, see DSA-103.INSTR.

Note: References are to the 2013 edition of the California Building Code (CBC) unless otherwise noted.

REQUIRED	TEST OR SPECIAL INSPECTION	TYPE 1	PERFORMED BY 2	CODE REFERENCE AND NOTES
+	SOILS			
+	CONCRETE	Table 1705A.3		
+	MASONRY	TMS 402-11/ACI 530-11/ASCE 5-11 Table 1.19.3		
-	STEEL	Table 1705A.2.1		
-	17. STRUCTURAL STEEL AND COLD-FORMED STEEL USED FOR STRUCTURAL PURPOSES			
	Material Verification:			
X	a. Verify that all materials are appropriately marked and that: • Mill certificates indicate material properties that comply with requirements, • Material sizes, types and grades comply with requirements.	Periodic	*	* By special inspector when performed off-site; by project inspector for steel shipped directly to project site without welding or fabrication.
X	b. Test unidentified materials	Test	Lab	2203A.1 (2203.1+). ASTM A370.
X	c. Examine seam welds of structural tubes and pipes	Periodic	SI*	* DSA IR 17-3.
	Inspection:			
X	d. Verify member locations, bracing and all details constructed in the field.	Continuous	PI	
X	e. Verify stiffener locations, connection tab locations and all construction details fabricated in the shop.	Periodic	SI	
-	19. WELDING:	DSA IR 17-3, AWS D1.1 and AWS D1.8 (AWS D1.3 for cold formed steel).		
	Verification of Materials, Equipment, Welders, etc:			
X	a. Verify weld filler material identification markings per AWS designation listed on the DSA approved documents and the WPS.	Periodic	SI	
X	b. Verify weld filler material manufacturer's certificate of compliance.	Periodic	SI	
X	c. Verify WPS, welder qualifications and equipment.	Periodic	SI	DSA IR 17-3.
-	19.1 SHOP WELDING:			
X	a. Inspect groove, multi-pass, and fillet welds > 5/16"	Continuous	SI	Per AISC 360 (and AISC 341 as applicable). DSA IR 17-3.
X	b. Inspect single-pass fillet welds ≤ 5/16"	Periodic	SI	Per AISC 360 (and AISC 341 as applicable). DSA IR 17-3.
X	c. Inspect welding of stairs and railing systems.	Periodic	SI	1705A.2.2.1 Per AISC 360 (and AISC 341 as applicable). DSA IR 17-3.
-	19.2 FIELD WELDING:[1,2]			
X	a. Inspect groove, multi-pass, and fillet welds > 5/16"	Continuous	SI	Per AISC 360 (and AISC 341 as applicable). DSA IR 17-3.
X	b. Inspect Single Pass Fillet Welds ≤ 5/16"	Periodic	SI	
X	f. Inspect welding of stairs and railing systems	Periodic	SI*	* May be performed by the project inspector when specifically approved by DSA. DSA IR 17-3. 1705A.2.2.1.1 and 1705A.2.2.5
	20. NONDESTRUCTIVE TESTING:[3]			
X	a. Ultrasonic	Test	Lab	AISC 341, App. Q 5.2. AWS D1.1, D1.8.- ANSI/ASNT CP-189, SNT-TC-1A. - ASTM E543,
X	b. Magnetic Particle	Test	Lab	E1444, E164 - DSA IR 17-2.
-	23. OTHER STEEL:			
X	a. SHOP WELDING OF COLD FORMED STEEL	Periodic	SI	
+	WOOD			
+	OTHER			

SUMMARY
1 All Structural Testing: Laboratory Verified Report - Form DSA-291
2 Shop Welding Inspection: Special Inspection Verified Report - Form DSA-292
3 Field Welding Inspection: Special Inspection Verified Report - Form DSA-292
4 Steel Joist Fabrication Inspection: Special Inspection Verified Report - Form DSA-292

NOTE:
THE DIFFERENCE BETWEEN "TESTS" AND "SPECIAL INSPECTIONS" IS ADDRESSED IN IR 17-4

FOOT NOTES / OPTIONS
1. THIS TEST INSPECTION REQUIREMENT OCCURS AT FIELD WELDING. MOD TO MOD OPTION ONLY. SEE 12/S1.50 OR 12/S1.60
2. NOT USED.
3. THIS TEST / INSPECTION IS TBD BY AOR / DSA PER PROJECT SPECIFIC REQUIREMENTS. UT TESTING SHALL BE PERFORMED ON 100% OF CJP GROOVE WELDS WHEN THE COLUMNS PER SCHEDULE ON SHEETS S-3.02 AND S-3.04 HAVE A THICKNESS OF 5/16" OR GREATER. MAGNETIC PARTICLE TESTING SHALL BE PERFORMED ON 25% OF ALL BEAM TO COLUMN CJP GROOVE WELDS

CONSTRUCTION OF (Diaphragm material-foundation material)
PLYWOOD FLOOR - WOOD FOUNDATION

1

THESE DRAWINGS AND ALL MATERIAL CONTAINED HEREIN ARE THE PROPERTY OF SILVERCREEK INDUSTRIES, INC (SCI Inc) AND SHALL NOT BE REPRODUCED, COPIED OR OTHERWISE DISPOSED OF DIRECTLY OR INDIRECTLY AND SHALL NOT BE USED IN WHOLE OR IN PART TO ASSIST IN THE MAKING OF OR FOR THE PURPOSE OF FURNISHING ANY INFORMATION FOR THE MAKING OF DRAWINGS, PRINTS, APPARATUS OR PARTS THEREOF WITHOUT THE FULL KNOWLEDGE AND WRITTEN CONSENT OF SCI Inc.
ALL PATENTABLE MATERIAL CONTAINED HEREIN AND ORIGINATING WITH SCI Inc SHALL BE THE PROPERTY OF SCI Inc

SILVER CREEK INDUSTRIES, INC.
"BUILDING FOR THE NEXT GENERATION"
SILVER CREEK
2830 BARRETT AVE PERRIS, CALIFORNIA 92571
PHONE: 951-943-5393 FAX: 951-943-2211

PROJECT NAME:

24x40 STOCKPILE OFFICE BUILDING

SHEET TITLE:

T & I FORMS

LICENSED ARCHITECT
NICKY SHIVELY III
C-33467
REN 01-31-2017
STATE OF CALIFORNIA

ARCHITECT OF RECORD SUBMISSION DATE

FILE #: 15-5
IDENTIFICATION STAMP
DIV. OF THE STATE ARCHITECT
OFFICE OF REGULATION SERVICES
03-118270
AC___ FLS___ SS CL
DATE NOV - 8 2017
TRACKING #: 63221-290

PROJECT SPECIFIC STATE AGENCY APPROVAL

IDENTIFICATION STAMP
DIV. OF THE STATE ARCHITECT
04 116284
ACS FLS SS RAE
DATE MAY 1 8 2017

ORIGINAL PC STATE AGENCY APPROVAL

PRE-CHECK (PC) DOCUMENT CODE 2013 CBC
A SEPARATE PROJECT APPLICATION FOR CONSTRUCTION IS REQUIRED

IDENTIFICATION STAMP
DIV. OF THE STATE ARCHITECT
OFFICE OF REGULATION SERVICES
PC 04-114102
AC___ FLS___ SS RAE
DATE AUG - 4 2015

REVISIONS
1
2
3
4
5
6
7
8

SILVER CREEK INDUSTRIES
24' x 40' PC - 2:12 PITCH

PROJECT NO:
DRAWN BY:
SCALE: AS NOTED
DATE: 01-30-15

P.C. SHEET NUMBER

A-0A

BUILDING OPTIONS SCHEDULE

BUILDING SECTION

		SHEET NUMBER
BUILDING SECTION:	☐ DUAL SLOPE ROOF	S-3.02
	☑ 0.030" DUAL SLOPE ROOF	S-3.04

WALL FRAMING

		SHEET NUMBER
FRAMING ELEVATIONS:	☑ WOOD STUDS	S-5.00
	☐ STEEL STUDS	S-5.20
FRAMING DETAILS:	☑ WOOD STUDS	S-5.10
	☑ WOOD STUDS	S-5.11
	☑ WOOD STUDS WALL FRAMING OPENING SCHEDULE	S-5.12
	☐ STEEL STUDS	S-5.30
	☐ STEEL STUDS	S-5.31

PLUMBING

	SHEET NUMBER
☑ PLUMBING DETAILS AND SCHEDULES	P-1.01

MECHANICAL

		SHEET NUMBER
☑ MECHANICAL NOTES, SCHEDULES, AND DETAILS:		M-0.1
☑ 24' x 40' - WALL MOUNT	☑ 4 LIGHT CONFIGURATION	M-1.01
☐ 36' x 40' - WALL MOUNT	☐ 4 LIGHT CONFIGURATION	M-1.02
☐ 48' TO 120' x 40' - WALL MOUNT	☐ 4 LIGHT CONFIGURATION	M-1.03
☐ 24' x 40' - ROOF MOUNT	☐ 4 LIGHT CONFIGURATION	M-2.01
☐ 24' x 40' MECHANICAL ROOF PLAN		M-2.02
☐ 36' x 40' - ROOF MOUNT	☐ 4 LIGHT CONFIGURATION	M-3.01
☐ 36' x 40' MECHANICAL ROOF PLAN		M-3.02
☐ 48' TO 120' x 40' - ROOF MOUNT	☐ 4 LIGHT CONFIGURATION	M-4.01
☐ 48' TO 120' x 40' MECHANICAL ROOF PLAN		M-4.02

ELECTRICAL

			SHEET NUMBER
ELECTRICAL PLAN:	☑ 24' x 40'	☑ 4 LIGHT CONFIGURATION	E-1.01
	☐ 36' x 40'	☐ 4 LIGHT CONFIGURATION	E-1.02
	☐ 48' TO 120' x 40'	☐ 4 LIGHT CONFIGURATION	E-1.03

RAMP

		SHEET NUMBER
RAMP PLANS:	☑ STANDARD RAMP PLAN	R-1.01
	☐ OFFSET RAMP PLAN	R-1.02
	☐ RAMP LANDING	R-1.03
	☐ STANDARD LANDING WITH STEPS	R-1.04
	☐ SWITCHBACK RAMP PLAN	R-1.05
	☑ RAMP DETAILS	R-2.01
	☐ CONCRETE RAMP	R-3.01

BUILDING RELOCATABLE DETAILS

	SHEET NUMBER
☐ BUILDING RELOCATION DETAILS	REL-101
☐ BUILDING RELOCATION DETAILS	REL-102

FIRE SPRINKLERS

	SHEET NUMBER
☐ FIRE SPRINKLER COVER SHEET	FS-1
☐ FIRE SPRINKLER PLAN - 120'x40' BLDG.	FS-2
☐ FIRE SPRINKLER PLAN - 120'x40' BLDG. W/ RESTROOM	FS-3
☐ TYPICAL FIRE SPRINKLER DETAILS	FS-4
☐ TYPICAL FIRE SPRINKLER PLANS - 96'x40', 108'x40'	FS-5
☐ TYPICAL FIRE SPRINKLER PLANS - 48'x40', 60'x40, 72'x40', 84'x40'	FS-6
☐ TYPICAL FIRE SPRINKLER PLANS - 24'x40', 36'x40', 12'x40' RESTROOM	FS-7

EXTERIOR ELEVATION

		SHEET NUMBER
EXTERIOR ELEVATIONS:	☑ 24' x 40'	A-4.01
EXTERIOR ELEVATIONS:	☐ 36' x 40'	A-4.03
EXTERIOR ELEVATIONS:	☐ 48' TO 120' x 40'	A-4.05

CROSS SECTIONS

		SHEET NUMBER
CROSS SECTIONS:	☑ DUAL SLOPE - ~~0.018"~~, BUILT UP, OR TPO ROOF DECK	A-5.02
	☐ DUAL SLOPE - 0.030" ROOF DECK	A-5.04
	CROSS SECTION	A-5.05

ARCHITECTURAL DETAILS

			SHEET NUMBER
WALL DETAILS:	☑ WOOD STUDS	☑ EXTERIOR WOOD SIDING	A-5.50
		☐ EXTERIOR PLASTER FINISH	A-5.51
		☐ EXTERIOR WOOD SIDING - 1 HOUR RATED	A-5.52
		☐ EXTERIOR PLASTER FINISH - 1 HOUR RATED	A-5.53

ARCHITECTURAL DETAILS

			SHEET NUMBER
WALL DETAILS:	☐ STEEL STUDS	☐ EXTERIOR WOOD SIDING	A-5.60
		☐ EXTERIOR PLASTER FINISH	A-5.61
		☐ EXTERIOR WOOD SIDING - 1 HOUR RATED	A-5.62
		☐ EXTERIOR PLASTER FINISH - 1 HOUR RATED	A-5.63
☐ 1-HOUR RATED OPTIONS			A-5.64
FLOOR DETAILS:			A-5.70

MISCELLANEOUS DETAILS

		SHEET NUMBER
MISCELLANEOUS:	☑ CASEWORK, TV, AND PROJECTION SCREEN DETAILS	A-5.80
	☑ WATER HEATER, DRINKING FOUNTAIN, AND FOLDING WALL DETAILS	A-5.81

INTERIOR ELEVATIONS

	SHEET NUMBER
☑ 24' x 40' INTERIOR ELEVATION	A-6.01
☐ 36' x 40' INTERIOR ELEVATION	A-6.02
☐ 48' TO 120' x 40' INTERIOR ELEVATION	A-6.03

FOUNDATIONS

		SHEET NUMBER
☑ WOOD FOUNDATION PLAN	☐ 24' x 40' (50 PSF)	F-0.01
	☐ 24' x 40' (50+15 PSF)	F-0.02
	☑ 24' x 40' (100 PSF)	F-0.03
	☐ 24' x 40' (150 PSF)	F-0.04
	☐ 36' x 40' (50 PSF)	F-0.11
	☐ 36' x 40' (50+15 PSF)	F-0.12
	☐ 36' x 40' (100 PSF)	F-0.13
	☐ 36' x 40' (150 PSF)	F-0.14
	☐ 48' x 40' (50 PSF)	F-0.21
	☐ 48' x 40' (50+15 PSF)	F-0.22
	☐ 48' x 40' (100 PSF)	F-0.23
	☐ 48' x 40' (150 PSF)	F-0.24
☑ WOOD FOUNDATION DETAILS:		F-0.50
☐ CONCRETE FOUNDATION PLAN - ABOVE GRADE	☐ WOOD FLOOR - (50, 50+15, 100, OR 150PSF)	F-1.01
	☐ CONCRETE FLOOR - (50, 50+15, 100, OR 150PSF)	F-1.11
☐ CONCRETE FOUNDATION DETAILS - ABOVE GRADE:		F-1.50
☐ CONCRETE FOUNDATION PLAN - BELOW GRADE	☐ WOOD FLOOR - (50, 50+15, 100, OR 150PSF)	F-2.01
	☐ CONCRETE FLOOR - (50, 50+15, 100, OR 150PSF)	F-2.11
☐ CONCRETE FOUNDATION DETAILS - BELOW GRADE:		F-2.50
☐ FOUNDATION DETAILS - CONCRETE		F-2.51

GENERAL STRUCTURAL SHEETS

	SHEET NUMBER
STRUCTURAL SPECS:	S-0.1

FLOOR FRAMING PLANS

		SHEET NUMBER
FLOOR FRAMING:	☑ WOOD FLOOR	S-1.01
	☐ CONCRETE FLOOR	S-1.11
FLOOR FRAMING DETAILS:	☑ WOOD FLOOR	S-1.50
	☐ CONCRETE FLOOR	S-1.60

ROOF FRAMING PLANS

		SHEET NUMBER
ROOF FRAMING:	☑ ~~0.018"~~, BUILT UP, OR TPO - DUAL SLOPE 20 PSF	S-2.11
	☐ 0.030" - DUAL SLOPE 20 PSF	S-2.12
	☐ 0.018", BUILT UP, OR TPO - DUAL SLOPE 40 PSF SNOWLOAD	S-2.13
	☐ 0.030" - DUAL SLOPE 40 PSF SNOWLOAD	S-2.14
ROOF FRAMING DETAILS:	☑ DUAL SLOPE	S-2.51
ROOF FRAMING DETAILS:		S-2.60

GENERAL ARCHITECTURAL SHEETS

	SHEET NUMBER
COVER SHEET:	A-0
T & I FORMS	A-0A
~~T & I FORMS~~	~~A-0B~~
BUILDING OPTIONS SCHEDULE SHEET:	A-0.0
SYMBOLS, LEGEND, ABBREVIATION, ADA SIGNAGE SHEET:	A-0.1
SCHEDULE SHEET:	A-0.2
KEY PLAN: 24' TO 120' x 40'	A-0.3
ENERGY CALCS	A-0.5(A-C)
ENERGY CALCS	A-0.6(A-F)
DESIGN ENERGY VALUES BY ZONE AND CALGREEN SPECIFICATIONS	A-0.7

FLOOR PLANS

		SHEET NUMBER
FLOOR PLANS:	☑ FLOOR PLAN - 24' x 40'	A-1.01
	☐ FLOOR PLAN - 36' x 40'	A-1.02
	☐ FLOOR PLAN - 48' TO 120' x 40'	A-1.03
	☐ OPTIONAL RESTROOM END MODULE - PLANS & ELEVATIONS	A-1.04
	☐ OPTIONAL RESTROOM END MODULE - PLUMBING SHEET	A-1.05
	☐ TOILET BUILDING 24x40 - PLANS & ELEVATIONS	A-1.06
	☐ TOILET BUILDING 24x40 - PLUMBING SHEET	A-1.07

CEILING

			SHEET NUMBER
REFLECTED CEILING PLANS:	☐ 24' x 40'	☐ 4 LIGHT CONFIGURATION	A-2.01
	☐ 36' x 40'	☐ 4 LIGHT CONFIGURATION	A-2.02
	☐ 48' TO 120' x 40'	☐ 4 LIGHT CONFIGURATION	A-2.03
	☑ 24' x 40' VAULTED CEILING	☑ 4 LIGHT CONFIGURATION	A-2.11
	☐ 36' x 40' VAULTED CEILING	☐ 4 LIGHT CONFIGURATION	A-2.12
	☐ 48' TO 120' x 40' VAULTED CEILING	☐ 4 LIGHT CONFIGURATION	A-2.13
CEILING DETAILS:	T GRID		A-2.20
	☐ HARD LID		A-2.21

ROOF PLAN

			SHEET NUMBER
ROOF PLANS:	☑ 24' x 40'	☑ ~~0.018"~~ ROOF - METAL DECK - DUAL SLOPE	A-3.01
		☐ 0.030" ROOF - METAL DECK - DUAL SLOPE	A-3.11
		☐ BUILT UP ROOF - DUAL SLOPE	A-3.21
		☐ TPO ROOF - DUAL SLOPE	A-3.41
	☐ 36' x 40'	☐ 0.018" ROOF - METAL DECK - DUAL SLOPE	A-3.02
		☐ 0.030" ROOF - METAL DECK - DUAL SLOPE	A-3.12
		☐ BUILT UP ROOF - DUAL SLOPE	A-3.22
		☐ TPO ROOF - DUAL SLOPE	A-3.42
	☐ 48' TO 120' x 40'	☐ 0.018" ROOF - METAL DECK - DUAL SLOPE	A-3.04
		☐ 0.030" ROOF - METAL DECK - DUAL SLOPE	A-3.14
		☐ BUILT UP ROOF - DUAL SLOPE	A-3.24
		☐ TPO ROOF - DUAL SLOPE	A-3.44
ROOF DETAILS:	☑ ~~0.018"~~ STANDING SEAM ROOF DECK		A-3.50
	☐ 0.030" STANDING SEAM ROOF DECK		A-3.60
	☐ 0.030" STANDING SEAM ROOF DECK		A-3.61
	☐ BUILT UP ROOF		A-3.70
	☐ TPO ROOF		A-3.90

THESE DRAWINGS AND ALL MATERIAL CONTAINED HEREIN ARE THE PROPERTY OF SILVERCREEK INDUSTRIES, INC (SCI Inc) AND SHALL NOT BE REPRODUCED, COPIED OR OTHERWISE DISPOSED OF DIRECTLY OR INDIRECTLY AND SHALL NOT BE USED IN WHOLE OR IN PART TO ASSIST IN THE MAKING OF OR FOR THE PURPOSE OF FURNISHING ANY INFORMATION FOR THE MAKING OF DRAWINGS, PRINTS, APPARATUS OR PARTS THEREOF WITHOUT THE FULL KNOWLEDGE AND WRITTEN CONSENT OF SCI Inc.
ALL PATENTABLE MATERIAL CONTAINED HEREIN AND ORIGINATING WITH SCI Inc SHALL BE THE PROPERTY OF SCI Inc

SILVER CREEK INDUSTRIES, INC.
"BUILDING FOR THE NEXT GENERATION"
SILVER CREEK
2830 BARRETT AVE PERRIS, CALIFORNIA 92571
PHONE: 951-943-5393 FAX: 951-943-2211

PROJECT NAME:

24x40 STOCKPILE OFFICE BUILDING

SHEET TITLE:

BUILDING OPTIONS SCHEDULE

LICENSED ARCHITECT
CLARK E. SHIVELY III
C-33467
REN 01-31-2017
STATE OF CALIFORNIA

ARCHITECT OF RECORD SUBMISSION DATE
FILE #: 15-6
IDENTIFICATION STAMP
DIV. OF THE STATE ARCHITECT
OFFICE OF REGULATION SERVICES
03-118270
AC FLS SS
DATE NOV - 8 2017
TRACKING #: 83221-290

PROJECT SPECIFIC STATE AGENCY APPROVAL
IDENTIFICATION STAMP
DIV. OF THE STATE ARCHITECT
04 116284
ACS FLS SS RAF
DATE MAY 18 2017

ORIGINAL PC STATE AGENCY APPROVAL
PRE-CHECK (PC) DOCUMENT
CODE 2013 CBC
1. SEPARATE PERMIT IS REQUIRED FOR CONSTRUCTION IN EXCLUDED
IDENTIFICATION STAMP
DIV. OF THE STATE ARCHITECT
OFFICE OF REGULATION SERVICES
PC 04-114102
AC FLS SS RAF
DATE AUG - 4 2015

REVISIONS
1
2
3
4
5
6
7
8

SILVER CREEK INDUSTRIES
24' x 40' PC - 2:12 PITCH

PROJECT NO:	
DRAWN BY:	
SCALE:	AS NOTED
DATE:	01-30-15
P.C. SHEET NUMBER	A-0.0

REFLECTED CEILING NOTES

METAL SUSPENSION FOR LAY-IN PANEL CEILING:

A. 12GA. (MIN.) HANGER WIRES MAY BE USED FOR UP TO THE INCLUDING 4'-0" X 4'-0" GRID SPACING, ALONG MAIN RUNNER. SPLICES WILL NOT BE PERMITTED IN ANY HANGER WIRES UNLESS SPECIFICALLY APPROVED BY DSA.

B. PROVIDE 12GA. HANGER WIRES WITHIN 8" OF THE ENDS OF ALL MAIN & CROSS RUNNERS OR AT 1/4 OF THE LENGTH OF THE END TEE, WHICHEVER IS LESS AT THE PERIMETER OF THE CEILING AREA.

C. PROVIDE TRAPEZE OR OTHER SUPPLEMENTARY SUPPORT MEMBERS AT OBSTRUCTIONS TO MAINTAIN HANGER SPACING. PROVIDE ADDITIONAL HANGERS, STRUTS OR BRACES AS REQUIRED AT THE CEILING BREAKS, SOFFITS OR DISCONTINUOUS AREAS. HANGER WIRES THAT ARE MORE THAN 1 IN 6 PLUMB ARE TO HAVE COUNTER SLOPING WIRES.

D. CEILING GRID MEMBERS MAY BE ATTACHED TO NOT MORE THAN 2 ADJACENT WALLS. CEILING GRID MEMBERS SHOULD BE AT LEAST 3/4" CLEAR OF OTHER WALLS. IF WALLS RUN DIAGONALLY TO CEILING GRID SYS. RUNNERS, THE MAIN AND CROSS RUNNERS SHOULD BE FREE & A MIN. OF 3/4" CLEAR OF WALL.

E. AT THE PERIMETER OF THE CEILING AREA WHERE MAIN OR CROSS RUNNERS ARE NOT CONNECTED TO THE ADJACENT WALL, PROVIDE INTERCONNECTION BETWEEN THE RUNNERS AT THE FREE END TO PREVENT LATERAL SPREADING. A METAL STRUT OR A 16GA. WIRE WITH A POSITIVE MECHANICAL CONNECTION TO THE RUNNERS MAY BE USED. WHERE THE PERPENDICULAR DISTANCE FROM THE WALL TO THE FIRST PARALLEL RUNNERS IS 8" OR LESS, THIS INTERLOCK IS NOT REQ'D.

F. PROVIDE BRACING ASSEMBLY CONSISTING OF A COMPRESSION STRUT (COMPRESSION STRUTS SHALL BE ADEQUATE TO RESIST THE VERTICAL COMPONENT INDUCED BY THE BRACING WIRES, AND SHALL NOT BE MORE THAN 1 (HORIZONTAL) IN 6 (VERTICAL) OUT OF PLUMB) AND (4) 12GA. SPLAYED WIRES ORIENTED 90° FROM EA. OTHER AT THE FOLLOWING SPACING.
(A). PLACE BRACING ASSEMBLIES AT A SPACING NOT MORE THAN 12'-0" X 12'-0" ON CENTER.
(B). PROVIDE BRACING ASSEMBLIES AT LOCATIONS NOT MORE THAN 1/2 THE ABOVE SPACING FROM EA. PERIMETER WALL OR AT THE EDGE OF VERTICAL CEILING OFFSETS. THE SLOPE OF THESE WIRES SHALL NOT EXCEED 45° FROM THE PLANE OF THE CEILING AND SHOULD BE TAUT WITHOUT CAUSING THE CEILING TO LIFT. SPLICES IN BRACING WIRES ARE NOT PERMITTED WITHOUT SPECIAL DSA APPROVAL.

G. FASTEN #12 HANGER WIRES WITH NOT LESS THAN THREE (3) TIGHT TURNS IN 3". HANGER WIRE LOOPS SHALL BE TIGHTLY WRAPPED AND SHARPLY BENT TO PREVENT ANY VERTICAL MOVEMENT OR ROTATION OF THE MEMBER WITHIN THE LOOPS (SEE ASTM E580, SECTION 5.2.7.2). FASTEN SPLAY WIRES WITH 4 TIGHT TURNS IN 1 1/2". HANGER OR BRACING WIRE ANCHORS TO THE STRUCTURE SHOULD BE INSTALLED IN SUCH A MANNER THAT THE DIRECTION OF THE ANCHOR ALIGNS AS CLOSELY AS POSSIBLE WITH THE DIRECTION OF THE WIRE.

H. SEPARATE ALL CEILING HANGING AND BRACING WIRES AT LEAST 6" FROM ALL UNBRACED DUCTS, PIPES, CONDUITS, ETC.
HANGER WIRES SHALL NOT ATTACH TO OR BEND AROUND INTERFERING MATERIAL OR EQUIPMENT. PROVIDE TRAPEZE OR OTHER SUPPLEMENTARY SUPPORT MEMBERS AT OBSTRUCTIONS TO TYPICAL HANGER SPACING. SEE FIGURE 3A, DETAIL F OF DSA IR 25-2.13. PROVIDE ADDITIONAL HANGERS, STRUTS OR BRACES AS REQUIRED AT ALL CEILING BREAKS, SOFFITS, OR DISCONTINUOUS AREAS.

I. CEILING PANELS SHALL NOT SUPPORT ANY LIGHT FIXTURES, AIR TERMINALS OR DEVICES.
ATTACH ALL LIGHT FIXTURES CEILING MOUNTED AIR TERMINALS AND ALL OTHER DEVICES TO THE CEILING GRID RUNNERS TO RESIST A HORIZONTAL FORCE EQUAL TO THE WEIGHT OF THE FIXTURES. SCREWS OR APPROVED FASTENERS ARE REQUIRED. MINIMUM OF TWO ATTACHMENTS ARE REQUIRED AT EACH LIGHT FIXTURE PER ASTM E580 SECTION 5.3.1.
RECESSED OR DROP-IN LIGHT FIXTURES, GRILLES, MECHANICAL TERMINALS, AND FLEXIBLE SPRINKLER HOSE FITTINGS OR OTHER SERVICES BE SUPPORTED DIRECTLY ON RUNNERS CLASSIFIED AS ASTM HEAVY DUTY, BUT THEY MUST ALSO HAVE A MINIMUM OF TWO (2) #12 GAGE SLACK SAFETY WIRES ATTACHED TO THE FIXTURE AT DIAGONAL CORNERS AND ANCHORED TO THE STRUCTURE ABOVE.

J. ALL FLUSH OR RECESSED LIGHT FIXTURES, MECHANICAL TERMINALS, AND FLEXIBLE SPRINKLER HOSE FITTINGS OR OTHER SERVICES WEIGHING GREATER THAN 56 LBS. MUST BE INDEPENDENTLY SUPPORTED BY NOT LESS THAN FOUR (4) TAUT #12 GAGE WIRES ATTACHED TO THE HOUSING AND TO THE STRUCTURE ABOVE. THE FOUR (4) TAUT #12 GAGE WIRES, INCLUDING THEIR ATTACHMENT TO THE STRUCTURE ABOVE, MUST BE CAPABLE OF SUPPORTING FOUR (4) TIMES THE WEIGHT OF THE UNIT.
ALL 4 ft. x 4 ft. LIGHT FIXTURES MUST HAVE SLACK SAFETY WIRES AT EACH CORNER. SURFACE-MOUNTED FIXTURES SHALL BE ATTACHED TO THE MAIN RUNNER WITH AT LEAST TWO POSITIVE CLAMPING DEVICES MADE OF MATERIAL WITH A MINIMUM #14 GAGE. ROTATIONAL SPRING CATCHES DO NOT COMPLY. A #12 GAGE SUSPENSION WIRE SHALL BE ATTACHED TO EACH CLAMPING DEVICE TO THE STRUCTURE ABOVE. PROVIDE ADDITIONAL SUPPORTS WHEN LIGHT FIXTURES ARE 8 ft. OR LONGER. MAXIMUM SPACING BETWEEN SUPPORTS SHALL NOT EXCEED 8 FEET.
SUPPORT PENDANT-MOUNTED LIGHT FIXTURES DIRECTLY FROM THE STRUCTURE ABOVE WITH HANGER WIRES OR CABLES PASSING THROUGH EACH PENDANT HANGER AND CAPABLE OF SUPPORTING TWO (2) TIMES THE WEIGHT OF THE FIXTURE. A BRACING ASSEMBLY, PER FIGURE 1, IS REQUIRED WHERE THE PENDANT HANGER PENETRATES THE CEILING. SPECIAL DETAILS ARE REQUIRED TO ATTACH THE PENDANT HANGER TO THE BRACING ASSEMBLY TO TRANSMIT HORIZONTAL FORCE. IF THE PENDANT MOUNTED LIGHT FIXTURE IS DIRECTLY AND INDEPENDENTLY BRACED BELOW THE CEILING, I.E. AIRCRAFT CABLES TO WALLS, THEN BRACE ASSEMBLY IS NOT REQUIRED ABOVE THE CEILING. SEE IR 16-9 FOR ADDITIONAL REQUIREMENT FOR PENDENT MOUNTED FIXTURES.
ALL LIGHT-WEIGHT MISCELLANEOUS DEVISES, SUCH AS STROBE LIGHTS, SPEAKERS, ETC., SHALL BE ATTACHED TO THE CEILING GRID PER SECTION 7.2.1, 7.2.2 & 7.2.3 OF DSA IR 25-2.13. IN ADDITION, DEVICES WEIGHING MORE THAN 10 LBS SHALL HAVE A #12 SLACK SAFETY WIRE ANCHORED TO THE STRUCTURE ABOVE. DEVICES WEIGHTING MORE THEN 20 LBS SHALL BE SUPPORTED FROM THE STRUCTURE ABOVE PER SECTION 7.4.1 OF DSA IR 25-2.13.
PENETRATIONS THROUGH THE CEILING FOR SPRINKLER HEADS AND OTHER SIMILAR DEVICES THAT ARE NOT INTEGRALLY TIED TO THE CEILING SYSTEM IN THE LATERAL DIRECTION SHALL HAVE A TWO (2) INCH OVERSIZED RING, SLEEVE OR ADAPTER THROUGH THE CEILING TILE TO ALLOW FREE MOVEMENT OF ONE (1) INCH IN ALL HORIZONTAL DIRECTIONS. ALTERNATIVELY, PER ASTM E580 SECTION 5.2.8.5, A FLEXIBLE SPRINKLER HOSE FITTING THAT CAN ACCOMMODATE 1 INCH OF CEILING MOVEMENT SHALL BE PERMITTED TO BE USED IN LIEU OF THE OVERSIZED RING, SLEEVE OR ADAPTER.

K. CLASSIFICATION OF CEILING GRID:
CLASSIFICATION OF CEILING GRID SHALL BE "HEAVY DUTY"
MAIN RUNNER: 7301
4' CROSS TEE: XL7341
2' CROSS TEE: XL7328
2" WALL ANGLE: 7810
ARMSTRONG PER ASTM C635, C636 AND ICC-ES ESR-1308.
PERIMETER SUPPORTING CLOSURE ANGLE SHALL BE NOT LESS THAN 2". ACOUSTICAL PANELS SHALL BE 5/8" MINIMUM THICK, MINERAL FIBERBOARD OR VINYL FACED FIBERGLASS LAY-IN PANELS SQUARE EDGE AND CBC CLASS C FLAME-SPREAD 76-200; SMOKE-DEVELOPED 0-450.

L. FOR CEILING AREAS EXCEEDING 2500 SQUARE FEET, A SEISMIC SEPARATION JOINT SHALL BE PROVIDED IN ACCORDANCE WITH DSA IR 25-2.13 SECTION 4, FIGURE 7, DETAIL A TO DIVIDE THE CEILING INTO AREAS NOT EXCEEDING 2500 SQUARE FEET. ALTERNATIVELY, COMPLY WITH ASTM E580-08 SECTION 5.2.9. - SEE 20/A-2.20

2. NOTE FOR FIRE BLK CONSTRUCTION: SECTION 718

PER CBC SECTION 718.2.1. FIRE BLOCKS MAY BE OF GYPSUM BOARD, CEMENT FIBER BOARD, BATTS OR MINERAL OR GLASS FIBER, OR OTHER APPROVED MATERIALS INSTALLED IN SUCH A MANNER AS TO BE SECURELY RETAINED IN PLACE. LOOSE-FILL INSULATION MATERIAL SHALL NOT BE USED AS A FIRE BLOCK UNLESS SPECIFICALLY TESTED IN THE FORM AND MANNER INTENDED FOR USE TO DEMONSTRATE ITS ABILITY TO REMAIN IN PLACE AND TO RETARD THE SPREAD OF FIRE AND HOT GASES. (SECTION 718.2.1). FLAME SPREAD - 25 SMOKE DEVELOPMENT - 50 MAX
FIRE BLOCKING IS NOT REQUIRED WITHIN CONCEALED SPACES CONSTRUCTED OF NON-COMBUSTIBLE MATERIALS

3. DUCTWORK SHALL BE RIGIDLY ATTACHED TO BUILDING AND SHALL NOT BE CLOSER THAN 6" TO HANGER WIRES

4. HANGER WIRES MORE THAN 1-IN-6 OUT OF PLUMB SHALL HAVE COUNTER SLOPING WIRES

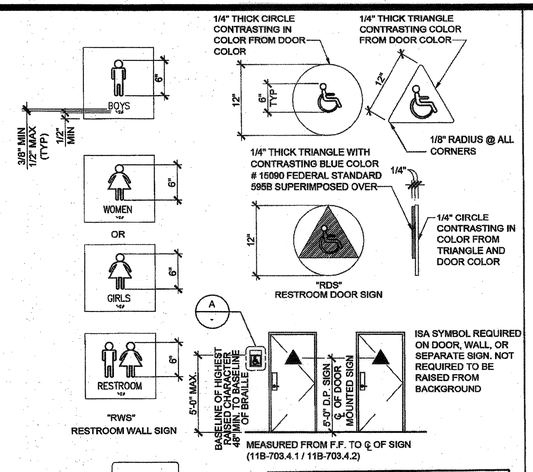

MOUNTING HEIGHT NOTE:
48" MIN AFF TO BASELINE OF BRAILLE
60" MAX AFF TO BASELINE OF HIGHEST RAISED CHARACTER

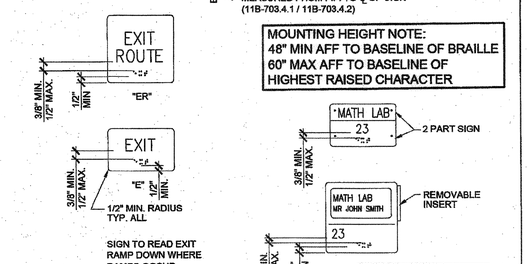

NOTE:
TACTILE SIGNS TO BE PROVIDED AND INSTALLED ON SITE BY OTHERS, NOT SCI. AND SHALL COMPLY W/ CBC 1011.4

SIGNAGE TEMPLATES

COORDINATE WITH NOTES 1 THROUGH 5 ON THIS SHEET.

TACTILE EXIT SIGNS

1. CHARACTER TYPE: CHARACTERS ON SIGNS SHALL BE RAISED 1/32 INCH (0.794 mm) MINIMUM AND SHALL BE SANS SERIF UPPERCASE CHARACTERS ACCOMPANIED BY CONTRACTED GRADE 2 BRAILLE (SEE NOTE 5 BELOW).
2. CHARACTER SIZE: RAISED CHARACTERS SHALL BE A MINIMUM OF 5/8 INCH (15.9 mm) AND A MAXIMUM OF 2 INCHES (51 mm) HEIGHT BASED ON THE HEIGHT OF THE UPPERCASE "I".
3. FINISH AND CONTRAST: CONTRAST BETWEEN CHARACTERS, SYMBOLS AND THEIR BACKGROUND MUST BE 70% MINIMUM AND HAVE A NON-GLARE FINISH. 11B-703.5.1 / 11B-703.6.2 / 11B-703.7.1
4. PROPORTIONS: CHARACTERS ON SIGNS SHALL HAVE A WIDTH-TO HEIGHT RATIO OF BETWEEN 60% MIN. AND 110% MAX. AND A STROKE WIDTH-TO-HEIGHT RATIO OF BETWEEN 10% MIN. AND 20% MAX. OF THE CHARACTER HEIGHT. 11B-703.2.4, 11B-703.2.6, 11B-703.5.7.

   ALL LETTERS MEASURED MUST BE UPPERCASE. AFTER CHOOSING A TYPE STYLE TO TEST, BEGIN BY PRINTING THE LETTERS "O", AND "I" AT 1 INCH HIGH. PLACE THE TEMPLATE'S 110% SQUARE OVER "O",IF THE CHARACTER IS NOT WIDER THAN 110% SQUARE, NOR NARROWER THAN THE 60% RECTANGLE, THE PROPORTIONS ARE CORRECT. USE THE 20% RECTANGLE TO DETERMINE IF THE STROKE OF THE "I" IS TOO BROAD, AND THE 10% RECTANGLE TO SEE IF ITS IS TOO NARROW. IF ALL THE TESTS ARE PASSED, THE TYPE STYLE IS COMPLIANT WITH PROPORTION CODE.

   TEMPLATE FOR CHECKING CHARACTER AND STROKE WIDTH TO HEIGHT PROPORTIONS:

5. BRAILLE: CONTRACTED CALIFORNIA GRADE 2 BRAILLE SHALL BE USED WHEREVER BRAILLE IS REQUIRED IN OTHER PORTIONS OF THESE STANDARDS. DOTS SHALL BE 1/10 INCH (2.54 mm) ON CENTERS IN EACH CELL WITH 2/10 INCH (5.08 mm) SPACE BETWEEN CELLS, MEASURED FROM THE SECOND COLUMN OF DOTS IN THE FIRST CELL TO THE FIRST COLUMN OF DOTS IN THE SECOND CELL. DOTS SHALL BE RAISED A MINIMUM OF 1/40 INCH (0.635 mm) ABOVE THE BACKGROUND. 11B-703.3 / 11B-703.3.1.

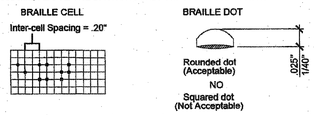

REQUIRED ROUNDED OR DOMED CALIFORNIA BRAILLED DOTS, EACH DISTINCT AND SEPARATE. DOTS WITH STRAIGHT SIDES AND FLAT TOPS ARE NOT READABLE FOR MANY BRAILLE USERS.

EXAMPLE OF HOW TO DEMONSTRATE FONT TO BE USED

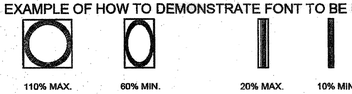

WIDTH-TO-HEIGHT PROPORTIONS TEMPLATE

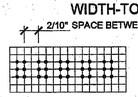

CALIFORNIA CONTRACTED GRADE 2 BRAILLE SHALL BE USED WHEREVER BRAILLE IS REQUIRED. INDIVIDUAL BRAILLE DOTS SHALL BE DISTINCT AND SEPARATE. EACH DOT SHALL BE ROUNDED OR DOMED IN LIEU OF SQUARE SIDED AND FLAT TOPPED.

BRAILLE SPACING TEMPLATE PER TITLE 24

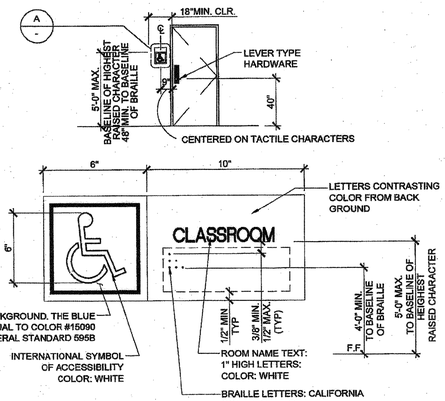

NOTE:
SIGN MATERIAL TO BE 1/8" THK. E.S. PLASTIC, W/ 1.32" RAISED BORDER, GRAPHICS AND LETTERS. PROVIDE MECHANICAL MOUNTING W/ VANDAL RESISTANT FASTENERS. CBC SECTION 11B-703.

(A) ROOM IDENTIFCATION ROOM SIGNAGE (BY DISTRICT)

FOR SITE SPECIFIC LOCATIONS ARCHITECT TO PROVIDE BUILDING / ROOM IDENTIFICATION SIGNS. DETAILS AND LOCATIONS OF SIGNAGE TO BE INDICATED.

COORDINATE WITH NOTES 1 THROUGH 5 ON THIS SHEET.

THIS DETAIL FOR REFERENCE ONLY

SYMBOLS LEGEND

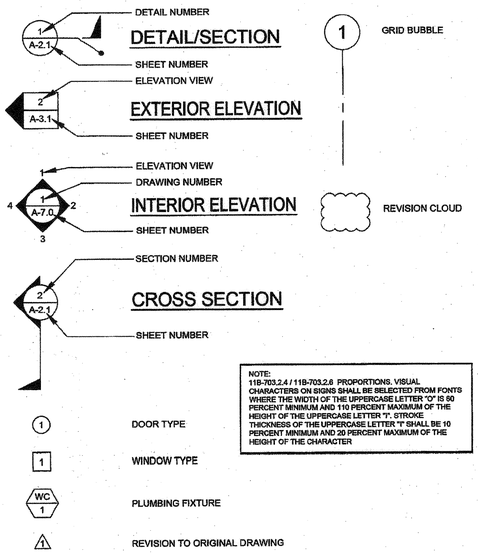

NOTE:
11B-703.2.4 / 11B-703.2.6 PROPORTIONS. VISUAL CHARACTERS ON SIGNS SHALL BE SELECTED FROM FONTS WHERE THE WIDTH OF THE UPPERCASE LETTER "O" IS 60 PERCENT MINIMUM AND 110 PERCENT MAXIMUM OF THE HEIGHT OF THE UPPERCASE LETTER "I". STROKE THICKNESS OF THE UPPERCASE LETTER "I" SHALL BE 10 PERCENT MINIMUM AND 20 PERCENT MAXIMUM OF THE HEIGHT OF THE CHARACTER

ABBREVIATIONS

AB	ANCHOR BOLT	FA	FIRE ALARM	℄ OR PL	PLATE
ABS	ABSOLUTE	FCO	FLOOR CLEAN OUT	PC	PRE-CHECKED
ABV	ABOVE	FF	FINISH FLOOR	PLAS	PLASTER
ACC	ACCESS	FG	FINISH GRADE	PLYWD	PLYWOOD
ADDL	ADDITIONAL	FIN	FINISH	PNL	PANEL
ADJ	ADJACENT	FLR	FLOOR	PNT	PAINT
AFF	ABOVE FINISH FLOOR	FN	FIELD NAILING	POC	POINT OF CONNECTION
AFG	ABOVE FINISH GRADE	FND	FOUNDATION	POT	PATH OF TRAVEL
AGC	ABOVE GRADE CONCRETE	FOC	FACE OF CONCRETE	PSF	POUNDS PER SQUARE FOOT
ALT	ALTERNATE	FOS	FACE OF STUD	PSI	POUNDS PER SQUARE INCH
AOR	ARCHITECT OF RECORD	FTG	FOOTING	PT	PRESSURE TREATED
APPROX	APPROXIMATE	FOF	FACE OF FINISH		
ARCH	ARCHITECTURAL / ARCHITECT	GA	GAUGE	RAG	RETURN AIR GRILLE
		GALV	GALVANIZE	RD	ROOF DRAIN
BD	BOARD	GC	GENERAL CONTRACTOR	REF	REFERENCE
BGC	BELOW GRADE CONCRETE	GR	GRADE	REG	REGISTER
BLDG	BUILDING	GYP	GYPSUM	REINF	REINFORCE
BLK	BLOCK	GYP BD	GYPSUM BOARD	REQ'D	REQUIRED
BLKG	BLOCKING			REV	REVISION
BM	BEAM	HB	HOSE BIBB	RF	ROOF
BOT	BOTTOM	HD	HEAVY DUTY	RM	ROOM
BTWN	BETWEEN	HDR	HEADER	RO	ROUGH OPENING
BU	BUILT UP	HDW	HARDWARE	ROH	ROOF OVERHANG
CAB	CABINET	HF	HEM FIR	SCHED	SCHEDULE
CBC	CALIFORNIA BUILDING CODE	HORIZ	HORIZONTAL	SEC	SECTION
CI	CAST IRON	HT	HEIGHT	SHT	SHEET
CJ	CONTROL JOINT	HVAC	HEATING, VENTILATING, AND AIR CONDITIONING	SHTG	SHEATHING
CJP	COMPLETE JOINT PENETRATION			SIM	SIMILAR
				SPEC	SPECIFICATION
℄	CENTER LINE	INCL	INCLUDED	SQ	SQUARE
CLG	CEILING	INFO	INFORMATION	SST	STAINLESS STEEL
CO	CLEAN OUT	INT	INTERIOR	STD	STANDARD
COL	COLUMN			STIFF	STIFFENER
CONC	CONCRETE	J-BOX	JUNCTION BOX	STL	STEEL
CONN	CONNECTION	JST	JOIST	STS	SELF-TAPPING SCREW
CONST	CONSTRUCTION	JT	JOINT	STSMS	SELF-TAPPING SHEET METAL SCREW
CONT	CONTINUOUS				
CPT	CARPET	KO	KNOCK OUT		
CSK	COUNTERSINK			T&B	TOP AND BOTTOM
CTR	CENTER	LAB	LABORATORY	T&G	TONGUE AND GROOVE
		LAM	LAMINATED	TEL	TELEPHONE
DBL	DOUBLE	LAV	LAVATORY	THK	THICK
DET	DETAIL	LB	POUNDS	TOC	TOP OF COLUMN
DF	DOUGLAS FIR	LT	LIGHT	TOS	TOP OF STEEL
DIA OR Ø	DIAMETER	LT WT	LIGHT WEIGHT	TS	TUBE STEEL
DIAG	DIAGONAL	LVR	LOUVER	TV	TELEVISION
DIM	DIMENSION			TYP	TYPICAL
DSA	DIVISION OF THE STATE ARCHITECT	MAX	MAXIMUM		
		MB	MACHINE BOLT	UBC	UNIFORM BUILDING CODE
DWG	DRAWING	MED	MEDIUM	UON	UNLESS OTHERWISE NOTED
		MFR	MANUFACTURER		
(E)	EXISTING	MIN	MINIMUM		
EA	EACH	MISC	MISCELLANEOUS	UR	URINAL
EJ	EXPANSION JOINT	MOD	MODULE		
ELEV	ELEVATION	MTL	METAL	VERT	VERTICAL
EN	END NAIL			VCT	VINYL COMPOSITION TILE
EQ	EQUAL	(N)	NEW		
EQUIP	EQUIPMENT	N	NORTH	W/	WITH
EW	EACH WAY	NIC	NOT IN CONTRACT (NOT IN SILVER CREEK'S SCOPE OF WORK	WC	WATER CLOSET
EXT	EXTERIOR			WCO	WALL CLEAN OUT
				WD	WOOD
		NL	NAIL	WH	WATER HEATER
		NO	NUMBER	WIC	WOODWORK INSTITUTE OF CALIFORNIA
		NTS	NOT TO SCALE		
		OC	ON CENTER	WND	WINDOW
		OD	OUTSIDE DIAMETER	W/O	WITHOUT
		OH	OPPOSITE HAND	WP	WATER PROOF
		OPNG	OPPENING		
		OPP	OPPOSITE		

SPECIFICATIONS

DIVISION 5 - METALS
05720 RAILINGS AND HANDRAILS:
ALL WELDED JOINTS AND SURFACES SHALL BE GROUND SMOOTH, NO SHARP OR ABRASIVE CORNERS EDGES OR SURFACES. WALL SURFACES ADJACENT TO HANDRAIL SHALL BE SMOOTH.

DIVISION 8 - DOORS
08710 DOOR HARDWARE:
- IF THE DOOR HAS A CLOSER, THEN THE SWEEP PERIOD OF THE CLOSER SHALL BE ADJUSTED SO THAT FROM AN OPEN POSITION OF 70 DEGREES, THE DOOR WILL TAKE AT LEAST 3 SECONDS TO MOVE TO A POINT 3" FROM THE LATCH, MEASURED TO THE LANDING SIDE OF THE DOOR. 11B-404.2.7 / 11B-309.4. ALL HARDWARE SHALL MEET THE REQUIREMENTS OF CBC SECTIONS CHAPTER 10, SECTION 1008.1.9 / 11B-404.2.7 AND 11B-309.4
- THRESHOLDS SHALL COMPLY WITH CBC SECTIONS 1008.1.7 AND 11B-404.2.5.
- FLOOR STOPS SHALL NOT BE LOCATED IN THE PATH OF TRAVEL AND 4" MAXIMUM FROM WALLS POLICY 99-08

08712 EXIT DEVICES: (WHERE APPLICABLE)
MAXIMUM EFFORT TO OPERATE DOORS SHALL NOT EXCEED 5 LB (22.2 N) FOR EXTERIOR AND INTERIOR DOORS, SUCH PULL OR PUSH EFFORT BEING APPLIED AT RIGHT ANGLES TO HINGED DOORS AND AT THE CENTER PLANE OF SLIDING OR FOLDING DOORS. COMPENSATING DEVICES OR AUTOMATIC DOOR OPERATORS MAY BE UTILIZED TO MEET THE ABOVE STANDARDS. WHEN FIRE DOORS ARE REQUIRED, 5LBS MAX OR THE MAXIMUM EFFORT TO OPERATE THE DOOR MAY BE INCREASED TO THE MAXIMUM ALLOWABLE BY THE APPROPRIATE ADMINISTRATIVE AUTHORITY, NOT TO EXCEED 15 LBF (66.72 N) PER CBC SECTIONS 1008.1.3 AND 11B-404.2.9.
HAND-ACTIVATED DOOR OPENING HARDWARE, HANDLES, PULLS, LATCHES, LOCKS, AND OTHER OPERATING DEVICES ON ACCESSIBLE DOORS SHALL HAVE A SHAPE THAT IS EASY TO GRASP WITH ONE HAND AND DOES NOT REQUIRE TIGHT GRASPING, TIGHT PINCHING, OR TWISTING OF THE WRIST TO OPERATE. MOUNTING HEIGHT OF LATCHING HARDWARE SHALL BE CENTERED BETWEEN 34 INCHES MIN AND 48 INCHES MAX ABOVE THE FLOOR PER CBC SECTION 1008.1.9.2. LATCHING AND LOCKING DOORS THAT ARE HAND-ACTIVATED AND WHICH ARE IN A PATH OF TRAVEL SHALL BE OPERABLE WITH A SINGLE EFFORT BY LEVER-TYPE HARDWARE, PANIC BARS, PUSH-PULL ACTIVATING BARS OR OTHER HARDWARE DESIGNED TO PROVIDE PASSAGE.
LOCKED EXIT DOOR SHALL OPERATE AS ABOVE IN EGRESS DIRECTION PER CBC SECTION 1008.1.2

PANIC HARDWARE SHALL NOT BE PROVIDED WITH "NIGHT LATCH" FUNCTION FOR ANY ACCESSIBLE DOORS OR GATES UNLESS THE FOLLOWING CONDITIONS ARE MET PER DSA INTERPRETATION 10-08 DSA/AC. SUCH CONDITIONS MUST BE CLEARLYDEMONSTRATED AND INDICATED IN THE SPECIFICATIONS:
- SUCH HARDWARE HAS A 'DOGGING' FEATURE.
- IT IS DOGGED DURING THE TIME THE FACILITY IS OPEN.
- SUCH 'DOGGING' OPERATION IS PERFORMED ONLY BY EMPLOYEES AS THEIR JOB FUNCTION (NON-PUBLIC USE).

DIVISION 9 - FINISHES
09650 RESILIENT FLOORING:
RESILIENT FLOORING DEMONSTRATING A COEFFICIENT OF FRICTION OF AT LEAST 0.6 PER ASTM D2047, WILL BE ACCEPTED AS MEETING THE INTENT OF SLIP RESISTANCE.
09680 CARPETING:
CARPET SHALL HAVE A LEVEL LOOP, TEXTURED LOOP, LEVEL-CUT, OR LEVEL-CUT/UNCUT PILE TEXTURE AND MAXIMUM PILE HEIGHT OF 1/2" PER CBC SECTION 11B-302.2.
CARPET EDGES SHALL COMPLY WITH CBC 11B-303.

DIVISION 10 - SPECIALTIES
10155 TOILET COMPARTMENTS; CBC SECTION 11B-604.8.1.2
TOILET STALLS FOR DISABLED PERSONS SHALL HAVE SLIDE BOLT DOOR LATCH, U-SHAPE OR WIRE PULLS BOTH SIDES OF THE DOOR AND SELF-CLOSING HINGES. DOORS HARDWARE SHALL BE MOUNTED AT 34" MIN TO 44" MAX ABOVE FINISHED FLOOR. DOORS AT FRONT ENTRY STALLS SHALL HAVE 32" MINIMUM CLEAR WIDTH WHEN THE DOOR IS OPEN 90°. DOORS AT SIDE ENTRY STALLS SHALL HAVE 34" MINIMUM CLEAR WIDTH WHEN THE DOOR IS OPEN 90°.
10800 TOILET ACCESSORIES:
TOILET ACCESSORIES REQUIRED TO BE ACCESSIBLE SHALL BE MOUNTED AT HEIGHTS ACCORDING TO CBC SECTION 11B-213.3. THE GRAB BAR CAN NOT PROJECT MORE THAN 3" INTO THE 46" MINIMUM CLEAR SPACE IN FRONT OF THE WATER CLOSET 11B-604.5 / 11B-604.8.1.5 / 11B-604.8.2.3. TOILET PAPER AND FEMININE NAPKIN DISPENSERS LOCATED ON THE GRAB BAR SIDE OF AN ACCESSIBLE TOILET ROOM OR STALL SHALL PROJECT MORE THAN THE GRAB BAR. THE ACCESSORY SHALL NOT BE LOCATED CLOSER THAN 1 1/2" CLEAR OF THE TANGENT POINT OF THE GRAB BAR. ACCESSORIES SURFACE MOUNTED ABOVE GRAB BAR WILL RESTRICT USABILITY.

DIVISION 15 - MECHANICAL
15400 PLUMBING FIXTURES:
ACCESSIBLE PLUMBING FIXTURES SHALL COMPLY WITH ALL OF THE REQUIREMENTS OF CBC SECTION 11B-213.2 / 11B-603.2. HEIGHTS AND LOCATION OF ALL FIXTURES SHALL BE ACCORDING TO CBC TABLE 11B-604.9. FIXTURE CONTROLS SHALL COMPLY WITH CBC SECTION 11B-213.2 / 11B-603.2.

THESE DRAWINGS AND ALL MATERIAL CONTAINED HEREIN ARE THE PROPERTY OF SILVERCREEK INDUSTRIES, INC (SCI Inc) AND SHALL NOT BE REPRODUCED, COPIED OR OTHERWISE DISPOSED OF DIRECTLY OR INDIRECTLY AND SHALL NOT BE USED IN WHOLE OR IN PART TO ASSIST IN THE MAKING OF OR FOR THE PURPOSE OF FURNISHING ANY INFORMATION FOR THE MAKING OF DRAWINGS, PRINTS, APPARATUS OR PARTS THEREOF WITHOUT THE FULL KNOWLEDGE AND WRITTEN CONSENT OF SCI Inc.
ALL PATENTABLE MATERIAL CONTAINED HEREIN AND ORIGINATING WITH SCI Inc SHALL BE THE PROPERTY OF SCI Inc

SILVER CREEK INDUSTRIES, INC.
"BUILDING FOR THE NEXT GENERATION"
SILVER CREEK
2830 BARRETT AVE PERRIS, CALIFORNIA 92571
PHONE: 951-943-5393 FAX: 951-943-2211

PROJECT NAME:
24x40 STOCKPILE OFFICE BUILDING

SHEET TITLE:
SYMBOLS LEGEND, ABBREVIATIONS & ADA SIGNAGE

LICENSED ARCHITECT JACK E. SIL

WINDOW SCHEDULE

WINDOW NO.	QTY	TYPE	WIDTH	HEIGHT	FUNCTION	FRAME MATERIAL	GLASS MATERIAL	WALL THICKNESS	NOTES
A		1	8'-0"	4'-0"	XOX	ANOD	DP		
~~B~~	~~2~~	~~2~~	~~4'-0"~~	~~4'-0"~~	~~XO~~	~~ANOD~~	~~DP~~		
~~C~~	~~3~~	~~3~~	~~8'-0"~~	~~4'-0"~~	~~FIXED~~	~~FRW~~	~~FRG~~		~~45 MIN. ASSEMBLY~~

WINDOW FINISH

ANOD: CLEAR ANODIZED ALUMINUM FRAME
BRONZ: BRONZE ANODIZED ALUMINUM FRAME
PAINT: PAINTED FRAME
WF: 16GA WELDED FRAME
FRW: FIRE RATED WINDOW
FRAME: MIN 0.048" THICK WELDED FRAME
FRG: FIRE RATED GLAZING: 1/4" WIRED GLASS. LABELED TO MEET THE REQUIREMENTS FOR A 3/4 HOUR FIRE WINDOW ASSEMBLY PER CBC SECTION/TABLE 715.5
DP: 3/16" MINIMUM DUAL PANE TEMPERED GLASS OF SOLAR GRAY - 3/16" ENERGYSHIELD, ALL OPERABLE SASH SHALL HAVE SCREENS. (U-FACTOR = .510 MAX, VT = 0.500 MIN., SHGC = .350 MAX, STC = 36 MIN.)

WINDOW TYPE

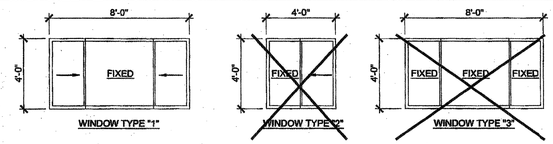

DOOR SCHEDULE

DOOR NO	WIDTH	HEIGHT	DOOR TYPE	QTY	DOOR MAT/FIN	FRAME MAT/FIN	HARDWARE SET	WALL THICKNESS	NOTES*
1	3'-0"	7'-0"	A		HM	KD	~~HW - 1~~	~~5 1/4"~~	
~~1R~~	~~3'-0"~~	~~7'-0"~~	~~A1~~		~~HM~~	~~KD~~	~~HW - 2~~	~~5 1/4"~~	
2	3'-0"	7'-0"	A		SCL	KD	~~HW - 3~~	~~5 1/2"~~	
~~3~~	~~3'-0"~~	~~7'-0"~~	~~B~~		~~HM~~	~~KD~~	~~HW - 4~~	~~4 7/8"~~	
~~4~~	~~3'-0"~~	~~7'-0"~~	~~B~~		~~HM~~	~~KD~~	~~HW - 5~~	~~4 7/8"~~	~~NO CLOSER REQ'D.~~
~~5~~	~~3'-0"~~	~~7'-0"~~	~~C~~		~~HM~~	~~KD~~	~~HW - 6~~	~~4 1/8"~~	

DOOR MATERIAL AND FINISH ABBREVIATIONS

HM: 18GA HOLLOW METAL
WF: 16GA WELDED FRAME
AL: ALUMINUM
SST: STAINLESS STEEL
KD: KNOCK DOWN FRAME
SCL: SOLID CORE WOOD LEGACY
HC: HOLLOW CORE WOOD
PT: PAINTED

*EXTERIOR DOORS TO BE UNINSULATED SINGLE LAYER DOORS W/ U-FACTOR OF 0.500 MAX

DOOR TYPES & NOTES

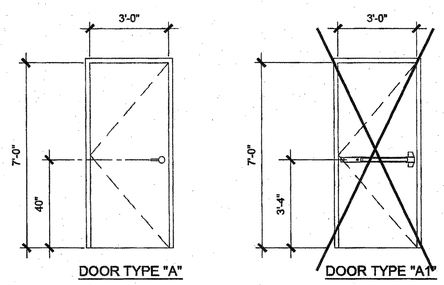

1. DOOR HANDLE FOR LOCKSETS AND PANIC HARDWARE TO BE CENTERED AT 40" AFF. HARDWARE TO BE OPENED FROM THE INSIDE WITHOUT THE USE OF A KEY OR SPECIAL TOOLS, KNOWLEDGE OR EFFORT. LEVERS TO RETURN TO WITHIN 1/2" OF DOOR.
2. ALL DOORS SHALL BE 1 3/4" THICK U.N.O.
3. CLOSER SHALL BE SET FOR MAXIMUM OPENING PRESSURE OF 5 LBS AT EXTERIOR AND INTERIOR DOORS.
4. PANIC HARDWARE IS REQUIRED TO BE INSTALLED WHEN THE CONFIGURATION OF ANY ROOM PROVIDES AN OCCUPANT LOAD OF 50 OR GREATER. CBC 1008.1.10
5. ALL HARDWARE SHALL COMPLY WITH SILVER CREEK'S SPEC'S ON THIS SHEET AND CBC SECTIONS 11B-206.5, 11B-404.1 AND 1008.
6. DOOR CLOSER SHALL BE ADJUSTED TO SO THAT FROM AN OPEN POSITION OF 70°, THE DOOR WILL TAKE AT LEAST 3 SECONDS TO MOVE TO A POINT 3" FROM THE LATCH, MEASURED TO THE LANDING SIDE OF THE DOOR
7. PANIC AND FIRE EXIT HARDWARE. WHERE THIS TYPE HARDWARE IS INSTALLED, IT SHALL COMPLY WITH THE FOLLOWING:
   - THE ACTUATING PORTION OF THE RELEASING DEVICE SHALL EXTEND AT LEAST ONE-HALF OF THE DOOR LEAF WIDTH.
   - THE MAXIMUM UNLATCHING FORCE SHALL NOT EXCEED 5LBS PER THE 2013 CBC
   APPROVED BY AUTHORITY W/ JURISDICTION, PANIC HARDWARE SHALL COMPLY WITH CBC SECTION 1008.1.10
8. THE FIRE PROTECTION FOR EXTERIOR WALL IS DETERMINED BASED UPON THE FIRE SEPARATION DISTANCE IN WHICH THE WALL IS LOCATED. SEE CBC TABLE 705.8 OR TABLE 602

FINISH SCHEDULE

ROOM NAME	FLOORING		WALL FINISH				CEILING		NOTES
	FLOOR	BASE	FRONT	LEFT	REAR	RIGHT	CEILING	CEILING HT	
~~CLASSROOM 101~~	~~CARP~~	~~4" TS~~	~~TACK~~	~~TACK~~	~~TACK~~	~~TACK~~	~~CP~~	~~8'-6"~~	
~~CLASSROOM 102~~	~~CARP~~	~~4" TS~~	~~TACK~~	~~TACK~~	~~TACK~~	~~TACK~~	~~CP~~	~~8'-6"~~	
~~TOILET 103~~	~~SV~~	~~6" TS~~	~~FRP~~	~~FRP~~	~~FRP~~	~~FRP~~	~~CP~~	~~8'-0"~~	

FLOOR, WALL, CEILING MATERIALS

FLOORING
CARP: CARPET PER STATE OF CALIFORNIA SPECIFICATIONS COMPLYING WITH GROUP 1; TYPE "A" OR TYPE "B"; CLASS 2; DENSITY 4600; DIRECT GLUE DOWN
SV: SHEET VINYL FLOORING
VCT: VINYL COMPOSITION TILE

BASE
4" TS: 4" TOP SET BASE
6" TS: 6" TOP SET BASE
SC: 6" SELF-COVE BASE

WALLS
TACK: 1/2" VINYL TACKBOARD CLASS 1 OVER ½" GYPSUM BOARD BACKING
FRP: 1/8" FIBER REINFORCED PANEL OVER ½" WATER RESISTANT GYPSUM BOARD
GYP: 1/2" GYPSUM BOARD; TAPE; TEXTURE; PAINTED FINISH
PLY: 1/2" PLYWOOD FINISH
NF: NO FINISH

CEILING
CP: ACOUSTICAL LAY IN GRID CEILING PANELS (SEE SPECIFICATION NOTES ON REFLECTED CEILING PLAN)
HC: 5/8" GYPSUM BOARD; TAPE; TEXTURE; PAINTED FINISH (HARD LID CEILING)
GBP: 1/2" GYPSUM BOARD WASHABLE PANELS (PAINTED)

FINISH NOTES

1. ALL FINISHES SHALL COMPLY WITH CBC, CFC AND TITLE 19 CCR.
2. PREPARATION FOR SUB-FLOOR TO ACCEPT FINISH FLOORING IS BY FLOORING CONTRACTOR. PLYWOOD SUB-FLOOR IS 2.4.1. PLYWOOD. OUTER PLYWOOD IS PLUGGED AND TOUCH SANDED. ANY DEFORMITIES DUE TO STANDARD CONSTRUCTION PRACTICES SHALL BE FILLED AND SANDED BY FLOORING CONTRACTOR. THE JOINT AT THE MODLINE SHALL NOT BE LARGER THAN 1/8" AND SHALL BE FILLED AND SANDED BY FLOORING CONTRACTOR.
3. RESILIENT FLOORING DEMONSTRATING A COEFFICIENT OF FRICTION OF AT LEAST 0.6 PER ASTM D2047, WILL BE ACCEPTED AS MEETING THE INTENT OF SLIP RESISTANCE.
4. CARPET SHALL HAVE A LEVEL LOOP, TEXTURED LOOP, LEVEL CUT, OR LEVEL CUT / UNCUT PILE TEXTURE AND MAXIMUM PILE HEIGHT OF 1/2" PER THE 2013 CBC. CARPET EDGE SHALL COMPLY WITH THE 2013 CBC
5. INTERIOR WALL AND CEILING FINISHES SHALL HAVE A MIN. CLASS 'C' RATING. FLAME SPREAD INDEX 76-200 & SMOKE DEVELOPED INDEX 0-450 PER 2013 CBC 803.

DOOR HARDWARE

CLASSROOM - EXTERIOR DOOR HW-1

LOCKSET	SCHLAGE ND75PDRHO626 (cylindrical)	Finish 26D	or equal
BUTTS	HAGER BB1191 4 1/2" x 4 1/2" NRP	Finish 26D	or equal
CLOSER	NORTON 8501 BFDA	Finish 689	or equal
WEATHER STRIP	HAGER 891SAV 3684	Finish Alum	or equal
THRESHOLD	HAGER 413SA 36	Finish Alum	or equal
DOOR BOTTOM	HAGER 783SAV 35N	Finish Alum	or equal

DOOR W/ PANIC HARDWARE - EXTERIOR DOOR HW-2

EXIT DEVICE	VON DUPRIN AX99L-2-PA w/ SCHLAGE rim cylinder	Finish Alum	or equal
BUTTS	HAGER BB1191 4 1/2" x 4 1/2" NRP	Finish 26D	or equal
CLOSER	NORTON 8501 BFDA	Finish 689	or equal
WEATHER STRIP	HAGER 891SAV 3684	Finish Alum	or equal
THRESHOLD	HAGER 413SA 36	Finish Alum	or equal
DOOR BOTTOM	HAGER 783SAV 35N	Finish Alum	or equal

STAFF RESTROOM / SINGLE-OCCUPANCY - INTERIOR DOOR HW-3

LOCKSET	SCHLAGE ND40SRHO626 (cylindrical)	Finish 26D	or equal
BUTTS	HAGER 1279 4 ½" x 4 ½"	Finish 26D	or equal

BOYS & GIRLS RESTROOM - EXTERIOR DOOR HW-4

LOCKSET	SCHLAGE ND70PDRHO626 (cylindrical)	Finish 26D	or equal
BUTTS	HAGER BB1191 4 ½" x 4 ½" NRP	Finish 26D	or equal
CLOSER	NORTON 8501 BFDA (OPTIONAL)	Finish 689	or equal
WEATHER STRIP	HAGER 891SAV 3684	Finish Alum	or equal
THRESHOLD	HAGER 413SA 36	Finish Alum	or equal
DOOR BOTTOM	HAGER 783SAV 35N	Finish Alum	or equal
LOUVER	ANEMO 24 x 12	Finish Bronze	or equal

STAFF RESTROOM - EXTERIOR DOOR HW-5

LOCKSET	SCHLAGE ND85PDRHO626 (cylindrical)	Finish 26D	or equal
BUTTS	HAGER BB1191 4 ½" x 4 ½" NRP	Finish 26D	or equal
WEATHER STRIP	HAGER 891SAV 3684	Finish Alum	or equal
THRESHOLD	HAGER 413SA 36	Finish Alum	or equal
DOOR BOTTOM	HAGER 783SAV 35N	Finish Alum	or equal
LOUVER	ANEMO 24 x 12	Finish Bronze	or equal

PLUMBING CHASE DOOR - INTERIOR DOOR HW-6

LOCKSET	SCHLAGE ND70PDRHO626 (cylindrical)	Finish 26D	or equal
BUTTS	HAGER BB1191 4 ½" x 4 ½" NRP	Finish 26D	or equal

EMERGANCY EXIT AND PANIC HARDWARE:
INDICATE ON PLANS AND/OR SPECIFICATIONS COMPLIANCE WITH SFM STANDARD 12-10-3, SECTION 12-10-302.
(A) THE CROSS-BAR SHALL EXTEND ACROSS NOT LESS THAN ONE-HALF THE WIDTH OF THE DOOR/GATE.
(D) THE ENDS OF THE CROSS-BAR SHALL BE CURVED, GUARDED OR OTHERWISE DESIGNED TO PREVENT CATCHING ON THE CLOTHING OF PERSONS DURING EGRESS.

INSULATION SPECIFICATIONS

MOISTURE PROTECTION INSULATION:

DESCRIPTION OF WORK: THE FURNISHING AND INSTALLING OF ALL INSULATION FOR ALL CEILING, FLOOR AREAS, AND EXTERIOR WALLS. (CLASS A = 0-25 FLAME SPREAD:) SMOKE DEVELOPMENT DENSITY LESS THAN 450.

MATERIAL: INSULATING MATERIAL FOR WALLS, CEILINGS, AND FLOORS SHALL BE FIBERGLASS BATTS (UNFACED) AND SHALL COMPLY WITH CBC 720.2 & 720.3. INSULATION SHALL BE AS MANUFACTURED BY OWENS-CORNING FIBERGLASS CORPORATION, JOHNS-MANVILLE, CERTAINTIES, OR EQUAL.

INSULATION VALUES
SEE SHEETS A-0.6, A-0.7, A-0.8 FOR REQUIRED INSULATION VALUES PER CLIMATE ZONE

EXTERIOR WALL INSULATION (MIN.)
- [x] R-13 (2x4)
- [x] R-19 (2x6)
- [ ] R-30 (2x8)

INTERIOR WALL INSULATION (MIN.)
R-13

FLOOR INSULATION (MIN.)
- [ ] NONE
- [ ] R-13
- [x] R-19

ROOF INSULATION (MIN.)
- [ ] R-19
- [x] R-30
- [ ] R-38
- [ ] R-19 BETWEEN JOISTS AND R-19 BELOW JOISTS

THESE DRAWINGS AND ALL MATERIAL CONTAINED HEREIN ARE THE PROPERTY OF SILVERCREEK INDUSTRIES, INC (SCI Inc) AND SHALL NOT BE REPRODUCED, COPIED OR OTHERWISE DISPOSED OF DIRECTLY OR INDIRECTLY AND SHALL NOT BE USED IN WHOLE OR IN PART TO ASSIST IN THE MAKING OF OR FOR THE PURPOSE OF FURNISHING ANY INFORMATION FOR THE MAKING OF DRAWINGS, PRINTS, APPARATUS OR PARTS THEREOF WITHOUT THE FULL KNOWLEDGE AND WRITTEN CONSENT OF SCI Inc.
ALL PATENTABLE MATERIAL CONTAINED HEREIN AND ORIGINATING WITH SCI Inc SHALL BE THE PROPERTY OF SCI Inc

SILVER CREEK INDUSTRIES, INC.
"BUILDING FOR THE NEXT GENERATION"
SILVER CREEK
2830 BARRETT AVE PERRIS, CALIFORNIA 92571
PHONE: 951-943-5393 FAX: 951-943-2211

PROJECT NAME:
24x40 STOCKPILE OFFICE BUILDING

SHEET TITLE:
SCHEDULES

LICENSED ARCHITECT
JOHN E. SHIVELY III
C-33467
REN 01-31-2017
STATE OF CALIFORNIA

ARCHITECT OF RECORD SUBMISSION DATE
FILE # 15-6
IDENTIFICATION STAMP
DIV. OF THE STATE ARCHITECT
OFFICE OF REGULATION SERVICES
03-118270
AC FLS SS
DATE NOV - 9 2017
TRACKING #: 62221-290

PROJECT SPECIFIC STATE AGENCY APPROVAL
IDENTIFICATION STAMP
DIV. OF THE STATE ARCHITECT
04 116284
ACS FLS SS RAF
DATE MAY 8 2017

ORIGINAL PC STATE AGENCY APPROVAL
PRE-CHECK (PC) DOCUMENT NOT FOR CONSTRUCTION
A SEPARATE PROJECT APPLICATION FOR CONSTRUCTION IS REQUIRED
IDENTIFICATION STAMP
DIV. OF THE STATE ARCHITECT
OFFICE OF REGULATION SERVICES
PC 04-114102
AC FLS SS RAF
DATE AUG - 4 2015

REVISIONS
1
2
3
4
5
6
7
8

SILVER CREEK INDUSTRIES
24' x 40' PC - 2:12 PITCH

PROJECT NO:
DRAWN BY:
SCALE: AS NOTED
DATE: 01-30-15
P.C. SHEET NUMBER
A-0.2

REFER TO SHEET "A-0.2N" FOR PROJECT SPECIFIC

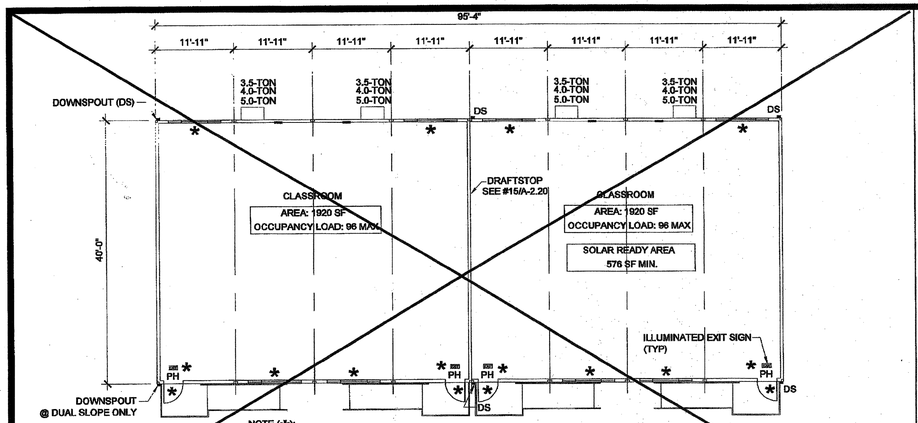

NOTE (✱):
1. DOOR / WINDOW PLACEMENTS MAY VARY.
IF THE NUMBER OF WINDOWS INCREASE, A NEW TITLE 24 SHALL BE SUBMITTED TO DSA
2. OPT. INTERIOR PARTITIONS MAY BE ADDED FOR BLDGS. WITH FLOOR LIVE LOADS OF 50+15, 100, OR 150 PSF AND SHALL BE SUBMITTED TO DSA FOR REVIEW. REFER TO STRUCTURAL DWGS. FOR WALL ATTACHMENT.
3. PROVIDE PANIC HARDWARE FOR ROOMS WITH TWO DOORS OR MORE
4. PROVIDE EXIT SIGN, PER CBC 1011, SEE DETAIL ON SHEET A-0.1, (TYP)
5. FOR LANDING, RAMP, & HANDRAIL REGULATIONS SEE DWG. "R" FOR INFORMATION.
6. PROVIDE OCCUPANT LOAD SIGN

96' x 40' KEY PLAN (TOTAL AREA - 3840 SF) SCALE: 3/32" = 1' - 0" 7

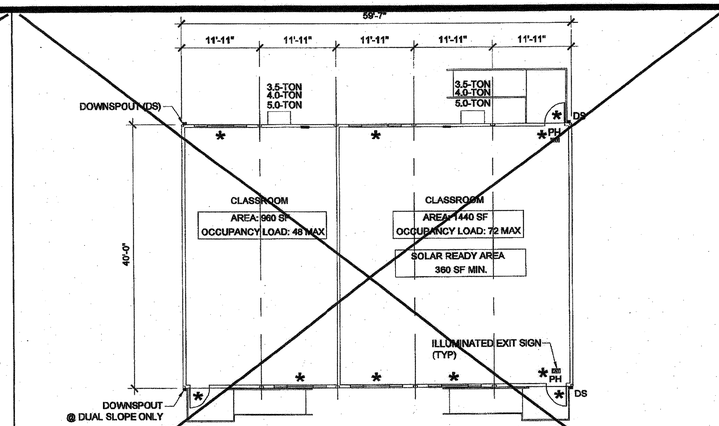

NOTE (✱):
1. DOOR / WINDOW PLACEMENTS MAY VARY.
IF THE NUMBER OF WINDOWS INCREASE, A NEW TITLE 24 SHALL BE SUBMITTED TO DSA
2. OPT. INTERIOR PARTITIONS MAY BE ADDED FOR BLDGS. WITH FLOOR LIVE LOADS OF 50+15, 100, OR 150 PSF AND SHALL BE SUBMITTED TO DSA FOR REVIEW. REFER TO STRUCTURAL DWGS. FOR WALL ATTACHMENT.
3. PROVIDE PANIC HARDWARE FOR ROOMS WITH TWO DOORS OR MORE
4. PROVIDE EXIT SIGN, PER CBC 1011, SEE DETAIL ON SHEET A-0.1, (TYP)
5. FOR LANDING, RAMP, & HANDRAIL REGULATIONS SEE DWG. "R" FOR INFORMATION.
6. PROVIDE OCCUPANT LOAD SIGN

60' x 40' KEY PLAN (TOTAL AREA - 2400 SF) SCALE: 3/32" = 1' - 0" 4

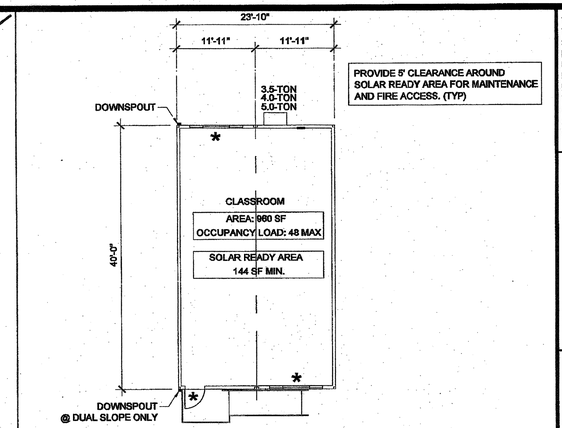

PROVIDE 5' CLEARANCE AROUND SOLAR READY AREA FOR MAINTENANCE AND FIRE ACCESS. (TYP)

NOTE (✱):
1. DOOR / WINDOW PLACEMENTS MAY VARY.
IF THE NUMBER OF WINDOWS INCREASE, A NEW ENERGY MODEL SHALL BE SUBMITTED TO DSA
2. OPT. INTERIOR PARTITIONS MAY BE ADDED FOR BLDGS. WITH FLOOR LIVE LOADS OF 50+15, 100, OR 150 PSF AND SHALL BE SUBMITTED TO DSA FOR REVIEW. REFER TO STRUCTURAL DWGS. FOR WALL ATTACHMENT.
3. FOR LANDING, RAMP, & HANDRAIL REGULATIONS SEE DWG. "R" FOR INFORMATION.

24' x 40' KEY PLAN (TOTAL AREA - 960 SF) SCALE: 3/32" = 1' - 0" 1

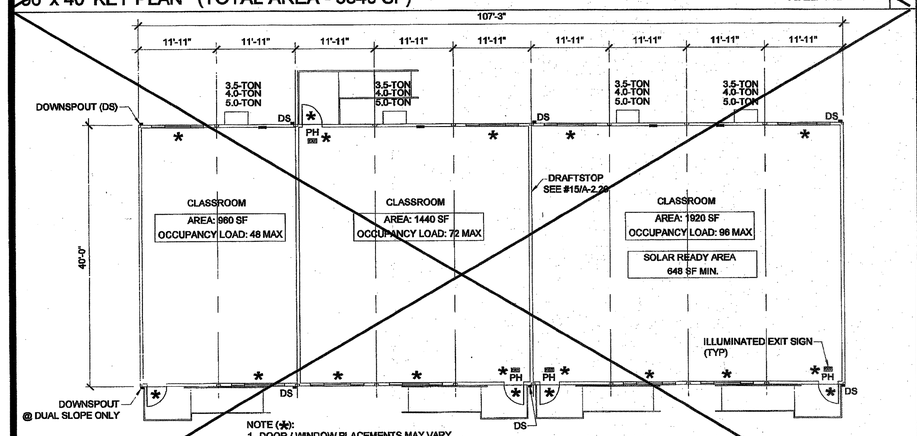

NOTE (✱):
1. DOOR / WINDOW PLACEMENTS MAY VARY.
IF THE NUMBER OF WINDOWS INCREASE, A NEW ENERGY MODEL SHALL BE SUBMITTED TO DSA
2. OPT. INTERIOR PARTITIONS MAY BE ADDED FOR BLDGS. WITH FLOOR LIVE LOADS OF 50+15, 100, OR 150 PSF AND SHALL BE SUBMITTED TO DSA FOR REVIEW. REFER TO STRUCTURAL DWGS. FOR WALL ATTACHMENT.
3. PROVIDE PANIC HARDWARE FOR ROOMS WITH TWO DOORS OR MORE
4. PROVIDE EXIT SIGN, PER CBC 1011, SEE DETAIL ON SHEET A-0.1, (TYP)
5. FOR LANDING, RAMP, & HANDRAIL REGULATIONS SEE DWG. "R" FOR INFORMATION.
6. PROVIDE OCCUPANT LOAD SIGN

108' x 40' KEY PLAN (TOTAL AREA - 4320 SF) SCALE: 3/32" = 1' - 0" 8

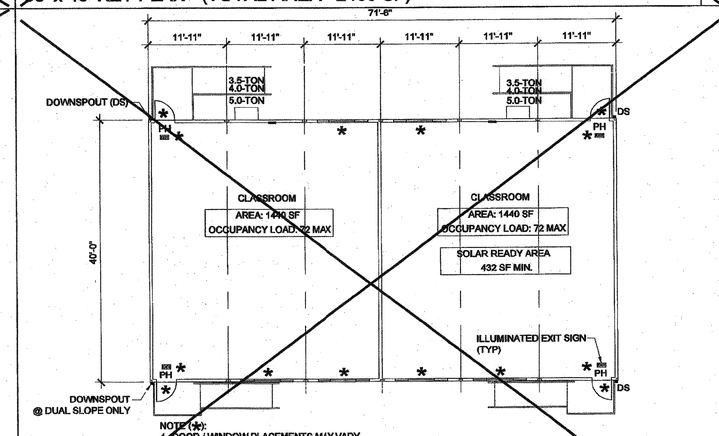

NOTE (✱):
1. DOOR / WINDOW PLACEMENTS MAY VARY.
IF THE NUMBER OF WINDOWS INCREASE, A NEW ENERGY MODEL SHALL BE SUBMITTED TO DSA
2. OPT. INTERIOR PARTITIONS MAY BE ADDED FOR BLDGS. WITH FLOOR LIVE LOADS OF 50+15, 100, OR 150 PSF AND SHALL BE SUBMITTED TO DSA FOR REVIEW. REFER TO STRUCTURAL DWGS. FOR WALL ATTACHMENT.
3. PROVIDE PANIC HARDWARE FOR ROOMS WITH TWO DOORS OR MORE
4. PROVIDE EXIT SIGN, PER CBC 1011, SEE DETAIL ON SHEET A-0.1, (TYP)
5. FOR LANDING, RAMP, & HANDRAIL REGULATIONS SEE DWG. "R" FOR INFORMATION.
6. PROVIDE OCCUPANT LOAD SIGN

72' x 40' KEY PLAN (TOTAL AREA - 2880 SF) SCALE: 3/32" = 1' - 0" 5

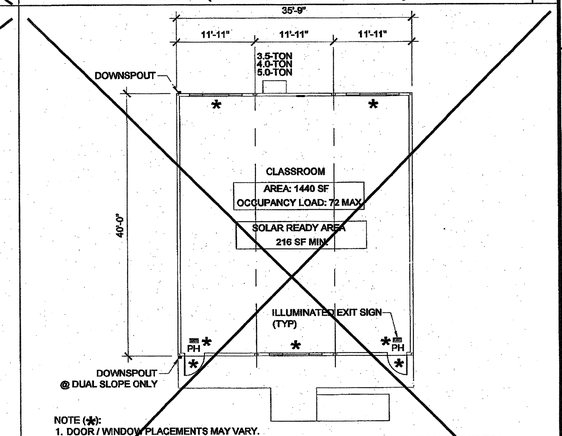

NOTE (✱):
1. DOOR / WINDOW PLACEMENTS MAY VARY.
IF THE NUMBER OF WINDOWS INCREASE, A NEW ENERGY MODEL SHALL BE SUBMITTED TO DSA
2. OPT. INTERIOR PARTITIONS MAY BE ADDED FOR BLDGS. WITH FLOOR LIVE LOADS OF 50+15, 100, OR 150 PSF AND SHALL BE SUBMITTED TO DSA FOR REVIEW. REFER TO STRUCTURAL DWGS. FOR WALL ATTACHMENT.
3. PROVIDE PANIC HARDWARE FOR ROOMS WITH TWO DOORS OR MORE
4. PROVIDE EXIT SIGN, PER CBC 1011, SEE DETAIL ON SHEET A-0.1, (TYP)
5. FOR LANDING, RAMP, & HANDRAIL REGULATIONS SEE DWG. "R" FOR INFORMATION.
6. PROVIDE OCCUPANT LOAD SIGN

36' x 40' KEY PLAN (TOTAL AREA - 1440 SF) SCALE: 3/32" = 1' - 0" 2

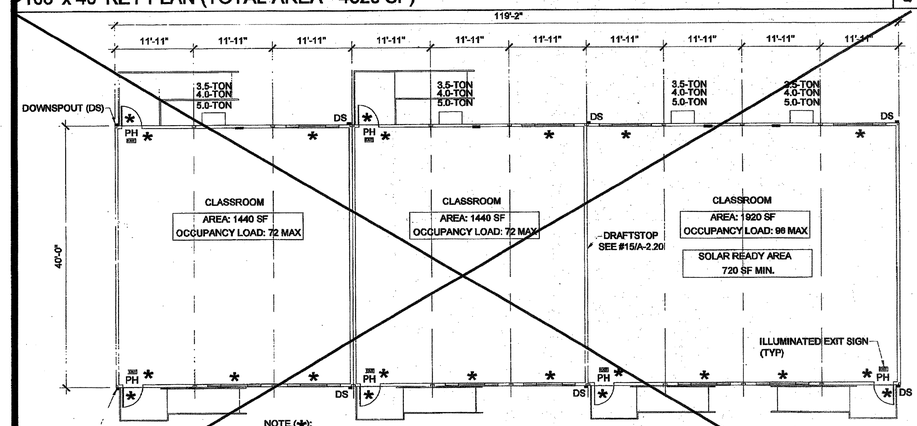

NOTE (✱):
1. DOOR / WINDOW PLACEMENTS MAY VARY.
IF THE NUMBER OF WINDOWS INCREASE, A NEW ENERGY MODEL SHALL BE SUBMITTED TO DSA
2. OPT. INTERIOR PARTITIONS MAY BE ADDED FOR BLDGS. WITH FLOOR LIVE LOADS OF 50+15, 100, OR 150 PSF AND SHALL BE SUBMITTED TO DSA FOR REVIEW. REFER TO STRUCTURAL DWGS. FOR WALL ATTACHMENT.
3. PROVIDE PANIC HARDWARE FOR ROOMS WITH TWO DOORS OR MORE
4. PROVIDE EXIT SIGN, PER CBC 1011, SEE DETAIL ON SHEET A-0.1, (TYP)
5. FOR LANDING, RAMP, & HANDRAIL REGULATIONS SEE DWG. "R" FOR INFORMATION.
6. PROVIDE OCCUPANT LOAD SIGN

120' x 40' KEY PLAN (TOTAL AREA - 4800 SF) SCALE: 3/32" = 1' - 0" 9

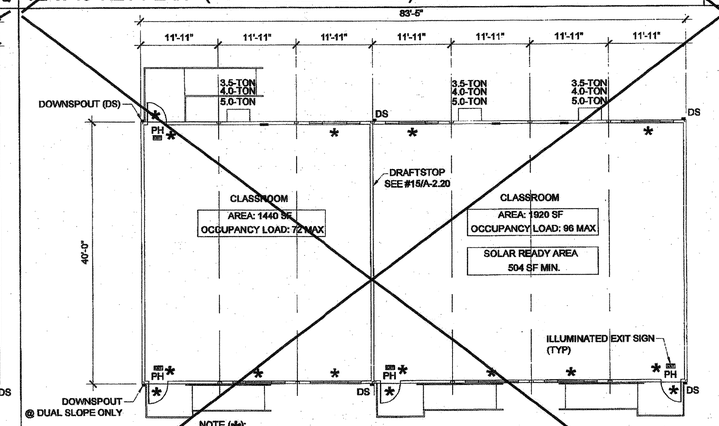

NOTE (✱):
1. DOOR / WINDOW PLACEMENTS MAY VARY.
IF THE NUMBER OF WINDOWS INCREASE, A NEW ENERGY MODEL SHALL BE SUBMITTED TO DSA
2. OPT. INTERIOR PARTITIONS MAY BE ADDED FOR BLDGS. WITH FLOOR LIVE LOADS OF 50+15, 100, OR 150 PSF AND SHALL BE SUBMITTED TO DSA FOR REVIEW. REFER TO STRUCTURAL DWGS. FOR WALL ATTACHMENT.
3. PROVIDE PANIC HARDWARE FOR ROOMS WITH TWO DOORS OR MORE
4. PROVIDE EXIT SIGN, PER CBC 1011, SEE DETAIL ON SHEET A-0.1, (TYP)
5. FOR LANDING, RAMP, & HANDRAIL REGULATIONS SEE DWG. "R" FOR INFORMATION.
6. PROVIDE OCCUPANT LOAD SIGN

84' x 40' KEY PLAN (TOTAL AREA - 3360 SF) SCALE: 3/32" = 1' - 0" 6

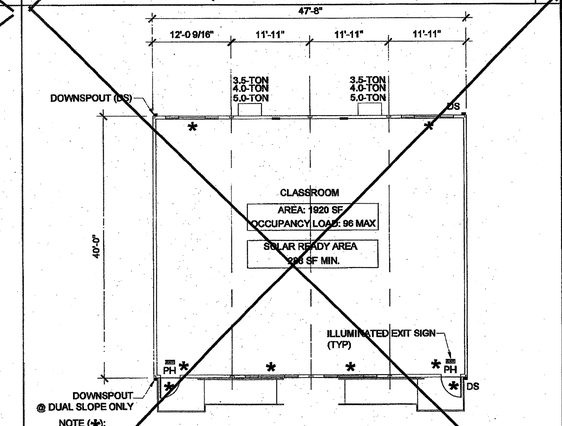

NOTE (✱):
1. DOOR / WINDOW PLACEMENTS MAY VARY.
IF THE NUMBER OF WINDOWS INCREASE, A NEW ENERGY MODEL SHALL BE SUBMITTED TO DSA
2. OPT. INTERIOR PARTITIONS MAY BE ADDED FOR BLDGS. WITH FLOOR LIVE LOADS OF 50+15, 100, OR 150 PSF AND SHALL BE SUBMITTED TO DSA FOR REVIEW. REFER TO STRUCTURAL DWGS. FOR WALL ATTACHMENT.
3. PROVIDE PANIC HARDWARE FOR ROOMS WITH TWO DOORS OR MORE
4. PROVIDE EXIT SIGN, PER CBC 1011, SEE DETAIL ON SHEET A-0.1, (TYP)
5. FOR LANDING, RAMP, & HANDRAIL REGULATIONS SEE DWG. "R" FOR INFORMATION.
6. PROVIDE OCCUPANT LOAD SIGN

48' x 40' KEY PLAN (TOTAL AREA - 1920 SF) SCALE: 3/32" = 1' - 0" 3

THESE DRAWINGS AND ALL MATERIAL CONTAINED HEREIN ARE THE PROPERTY OF SILVERCREEK INDUSTRIES, INC (SCI Inc) AND SHALL NOT BE REPRODUCED, COPIED OR OTHERWISE DISPOSED OF DIRECTLY OR INDIRECTLY AND SHALL NOT BE USED IN WHOLE OR IN PART TO ASSIST IN THE MAKING OF OR FOR THE PURPOSE OF FURNISHING ANY INFORMATION FOR THE MAKING OF DRAWINGS, PRINTS, APPARATUS OR PARTS THEREOF WITHOUT THE FULL KNOWLEDGE AND WRITTEN CONSENT OF SCI Inc.
ALL PATENTABLE MATERIAL CONTAINED HEREIN AND ORIGINATING WITH SCI Inc SHALL BE THE PROPERTY OF SCI Inc

SILVER CREEK INDUSTRIES, INC.
"BUILDING FOR THE NEXT GENERATION"
SILVER CREEK
2830 BARRETT AVE PERRIS, CALIFORNIA 92571
PHONE: 951-943-5393 FAX: 951-943-2211

PROJECT NAME:

24x40 STOCKPILE OFFICE BUILDING

SHEET TITLE:

TYPICAL KEY PLANS 24' - 120' x 40'

LICENSED ARCHITECT
JOHN E. SHIVELY III
C-33467
REN 01-31-2017
STATE OF CALIFORNIA

ARCHITECT OF RECORD SUBMISSION DATE

FILE #: 15-5
IDENTIFICATION STAMP
DIV. OF THE STATE ARCHITECT
OFFICE OF REGULATION SERVICES
03-118270
AC FLS SS
DATE NOV 8 2017
TRACKING #: 63221-290

PROJECT SPECIFIC STATE AGENCY APPROVAL

IDENTIFICATION STAMP
DIV. OF THE STATE ARCHITECT
04 116284
ACS FLS SS RAF
DATE MAY 1 0 2017

ORIGINAL PC STATE AGENCY APPROVAL

PRE-CHECK (PC) DOCUMENT
2009 & 2013 CBC
A SEPARATE PROJECT APPLICATION FOR CONSTRUCTION IS REQUIRED

IDENTIFICATION STAMP
DIV. OF THE STATE ARCHITECT
OFFICE OF REGULATION SERVICES
PC 04-114102
AC FLS SS RAF
DATE AUG - 4 2015

REVISIONS
1
2
3
4
5
6
7
8

SILVER CREEK INDUSTRIES
24' x 40' PC - 2:12 PITCH

PROJECT NO:	
DRAWN BY:	
SCALE:	AS NOTED
DATE:	01-30-15

P.C. SHEET NUMBER

A-0.3

A. GENERAL INFORMATION					
01	Project Address	ZONE 14	21	Compliance Software	CBECC-Com 2013-3a (R97)
02	City	ZONE 14	22	Compliance Manager Version	BEMCmpMgr 2013-3a (R97)
03	Zip code		23	Rule Set Filename	CA 2013 Nonresidential, Vers. 2.0 (CEC 2013 Rs+Pers.bin)
04	Climate Zone	CZone:Zone14	24	Building Type	Nonresidential
05	Building Front Orientation	330	25	Construction Type	
06	Number of Above Grade Stories	1	26	North Wall Area (ft2)	264
07	Number of Below Grade Stories	0	27	East Wall Area (ft2)	440
08	Number of Dwelling Units	0	28	South Wall Area (ft2)	264
09	Total Conditioned Floor Area (ft2)	960	29	West Wall Area (ft2)	440
10	Total Unconditioned Floor Area (ft2)		30	Total Exterior Wall Area (ft2)	1,408
11	Addition Conditioned Floor Area (ft2)		31	North Glazing Area (ft2) / Glazing Ratio	32 / 12%
12	Addition Unconditioned Floor Area(ft2)		32	East Glazing Area (ft2) / Glazing Ratio	0 / 0%
13	Number of Thermal Zones	1	33	South Glazing Area (ft2) / Glazing Ratio	32 / 12%
14	Number of Thermal Zones (conditioned)	1	34	West Glazing Area (ft2) / Glazing Ratio	0 / 0%
15	Number of Air Systems	1	35	Total Glazing Area (ft2) /Glazing Ratio	64 / 5%
16	Number of Zonal Systems	0	36	Roof Area (ft2)	960
17	Number of Terminal Units	0	37	Skylight Area (ft2) / Skylight-Roof-Ratio	0 / 0%
18			38		
19			39		
20			40		

B. COMPLIANCE RESULTS				
01	BUILDING COMPLIES			
02	Special Features are Required -TBD			
03	HERS Verification Is Required - TBD			
	ANNUAL TDV ENERGY USE SUMMARY (kBtu/ft2/yr)			
	04	05	06	07
Energy Component	Standard Design	Proposed Design	Compliance Margin	Percent Better Than Standard*
Space Heating	66.2	67.3	1.0	1.5%
Space Cooling	207.9	302.9	-95.0	-26.5%
Indoor Fans	142.6	84.6	58.0	41.3%
Heat Rejection	--	--	--	--
Pumps & Misc.	--	--	--	--
Domestic Hot Water	--	--	--	--
Lighting	82.1	54.5	27.6	33.6%
COMPLIANCE TOTAL	599.0	493.2	33.5	5.7%
Receptacle	66.6	66.6		0.0%
Process	--	--		--
Process Lighting	--	--		--
TOTAL	599.0	559.8		6.6%

C. OCCUPANCY SUMMARY INFORMATION -							
01	02	03	04	05	06	07	08
					Allowed (Baseline) Lighting Power		
					Additional (Custom) Allowances		
Occupancy Type	Floor Area	Installed Lighting Power	Lighting Credits Credits	General Lighting Power Allowance	Area Category	Tailored Method	Total Allowed Lighting Power
	(ft2)	(Watts)	(Watts)	(Watts)	(Watts)	(Watts)	(Watts)
Classrooms, Lecture, Training, Vocational Areas	960	744	168	1,152			1,152

D. ENVELOPE SUMMARY INFORMATION								
01	02	03	04	05		06	07	08
				Assembly Layers				
Surface Name	Surface Type	U-Factor / F-Factor / Cz-Factor		Framing Type	Framing Spacing	R-value		Certified Cool Roof
SCI ROOF	Roof	U-0.05	Metal Standing Seam - 1/10 in. Fiber cement board - .25 in/32 - 1/2 in Plywood - 3/4 in. Composite Framing Air - Cavity - Wall Roof Ceiling - 4 in. or more Acoustic Tile - 1/2 in.	Metal	Roof24inOC	R-0 R-0.94 R-0.94 R-30 Cavity R-0.62 R-1.25		
SCI PLYWD FLOOR	ExteriorFloor	U-0.27	Air - Cavity - Wall Roof Ceiling - 4 in. or more Composite Framing Plywood - 1 in. Carpet - .25 in.	Metal	Floor24inOC	R-0.92 R-19 Cavity R-1.25 R-2.38		
2x4 T111 WALL	ExteriorWall	U-0.09	Wood siding - 1/2 in. Vapor seal - plastic film - 1/16 in. Composite Framing Gypsum Board - 1/2 in. Acoustic Tile - 1/2 in.	Wood	Wall16inOC	R-0.8 R-0.01 R-13 Cavity R-0.45 R-1.25		

E. FENESTRATION SUMMARY INFORMATION							
01	02	03	04	05	06	07	08
		Certification					
Name	Fenestration Type	Method	Assembly Method	Frame Type	U-value	SHGC	VT
SCI - IWG 6000 - SLIDER - 3060 / CLR	Sliding	NFRC/Rated	Manufactured	- specify -	0.61	0.35	0.53

F. MECHANICAL SYSTEM SUMMARY INFORMATION													
01	02	03	04					05					
			Cooling					Heating					
Equipment Name	Equipment Type	Qty	Type	SEER	EER	Rated Output kBtu/h	Type	AFUE	HSPF	Thermal Eff.	Rated Output kBtu/h	Supplemental Heat Source	Supplemental Rated Output kBtu/h
AirSystem 1	SZHP	1	Directdx packaged	13.0	8.0	53	HeatPump				50.2		

G. MECHANICAL SYSTEM ECONOMIZER AND FAN SUMMARY INFORMATION											
01	02	03	04				05				
		Outside Air	Supply Fan				Return Fan				
Equipment Name	Economizer Type	CFM	CFM	HP	BHP	Control	CFM	HP	BHP	Control
AirSystem 1	NoEconomizer	720	1875.0	0.75	0.75	Constant volume				

H. CHILLER SUMMARY INFORMATION
Not Applicable

I. COOLING TOWER SUMMARY INFORMATION
Not Applicable

J. BOILER SUMMARY INFORMATION
Not Applicable

K. CENTRAL MECHANICAL SYSTEM - PUMP SUMMARY INFORMATION
Not Applicable

L. TERMINAL UNIT SUMMARY INFORMATION
Not Applicable

L-1. ZONAL SYSTEM SUMMARY INFORMATION
Not Applicable

M-1. DHW SUMMARY INFORMATION: FLUID SYSTEMS
Not Applicable

M-2. DHW SUMMARY INFORMATION: RECIRCULATION DHW SYSTEMS
Not Applicable

N. EXCEPTIONAL CONDITIONS COMPLIANCE CHECKLIST
Not Applicable

Not Applicable.

DOCUMENTATION AUTHOR'S DECLARATION STATEMENT	
I, I certify that this Certificate of Compliance documentation is accurate and complete.	
Documentation Author Name:Ryan Mcintosh	Documentation Author Signature:
Company:Silver Creek	Signature Date: 12/30/14
Address:2830 Barrett Ave - Perris CA 92571	CEA Identification (if applicable):
City/State/Zip:	Phone:951-943-5393

RESPONSIBLE PERSON'S DECLARATION STATEMENT
I certify the following under penalty of perjury, under the laws of the State of California: a. I hereby affirm that I am eligible under the provisions of Division 3 of the Business and Professions Code to sign this document as the person responsible for its preparation; and that I am licensed in the State of California as a civil engineer, mechanical engineer, electrical engineer, or I am a licensed architect. b. I affirm that I am eligible under the provisions of Division 3 of the Business and Professions Code by section 5537.2 or 6737.1 to sign this document as the person responsible for its preparation and that I am a licensed contractor performing the work. b. I affirm that I am eligible under Division 3 of the Business and Professions Code to sign this document because it pertains to a structure or type of work described as exempt pursuant to Business and Professions Code Sections 5537, 5538 and 6737.1.

Building Owner's Name:SIERRA CREEK	Building Owner's Signature:
Address:2830 Barrett Ave - Perris CA 92571	Date Signed: 12/30/14
City/State/Zip:	Phone:951-943-5393
Responsible Designer Name:Silver Creek	Responsible Designer Signature:
Company:Silver Creek	Date Signed: 12/30/14
Address:2830 Barrett Ave - Perris CA 92571	License: 0552505
City/State/Zip:	Phone:951-943-5393
Responsible Lighting Designer Name:Silver Creek	Responsible Lighting Designer Signature:
Company:Silver Creek	Date Signed: 12/30/14
Address:2830 Barrett Ave - Perris CA 92571	License: 0552505
City/State/Zip:	Phone:951-943-5393
Responsible Mechanical Designer Name:Silver Creek	Responsible Mechanical Designer Signature:
Company:Silver Creek	Date Signed: 12/30/14
Address:2830 Barrett Ave - Perris CA 92571	License: 0552505
City/State/Zip:	Phone:951-943-5393

Lydia Barron

Digitally signed by Lydia Barron
DN: c=California, l=Sacramento, o=California Department of General Services, ou=Division of the State Architect, cn=www.verisign.com/repository/CPS Incorp. by Ref.,LIAB.LTD(c)99, title=Architectural Associate, cn=Lydia Barron, email=lydia.barron@dgs.ca.gov
Date: 2015.06.30 12:20:11 -07'00'

THESE DRAWINGS AND ALL MATERIAL CONTAINED HEREIN ARE THE PROPERTY OF SILVERCREEK INDUSTRIES, INC (SCI Inc) AND SHALL NOT BE REPRODUCED, COPIED OR OTHERWISE DISPOSED OF DIRECTLY OR INDIRECTLY AND SHALL NOT BE USED IN WHOLE OR IN PART TO ASSIST IN THE MAKING OF OR FOR THE PURPOSE OF FURNISHING ANY INFORMATION FOR THE MAKING OF DRAWINGS, PRINTS, APPARATUS OR PARTS THEREOF WITHOUT THE FULL KNOWLEDGE AND WRITTEN CONSENT OF SCI Inc.
ALL PATENTABLE MATERIAL CONTAINED HEREIN AND ORIGINATING WITH SCI Inc SHALL BE THE PROPERTY OF SCI Inc

SILVER CREEK INDUSTRIES, INC.
"BUILDING FOR THE NEXT GENERATION"
SILVER CREEK
2830 BARRETT AVE PERRIS, CALIFORNIA 92571
PHONE: 951-943-5393 FAX: 951-943-2211

PROJECT NAME:

24x40 STOCKPILE OFFICE BUILDING

SHEET TITLE:

ENERGY CALC'S. PRF FORMS ZONE 14 WORST CASE

LICENSED ARCHITECT
C-33467
REN 01-31-2017
STATE OF CALIFORNIA

ARCHITECT OF RECORD SUBMISSION DATE
FILE #: 15-6
IDENTIFICATION STAMP
DIV. OF THE STATE ARCHITECT
OFFICE OF REGULATION SERVICES
03-118270
AC___ FLS___ SS OL
DATE NOV 9 2017
TRACKING #: 632121-2590

PROJECT SPECIFIC STATE AGENCY APPROVAL
IDENTIFICATION STAMP
DIV. OF THE STATE ARCHITECT
04 116284
ACS___ FLS___ SS RAF
DATE MAY 18 2017

ORIGINAL PC STATE AGENCY APPROVAL
PRE-CHECK (PC) DOCUMENT
CODE: 2013 CBC
A SEPARATE "PC" SET IS REQUIRED FOR CONSTRUCTION IF IS REQUIRED
IDENTIFICATION STAMP
DIV. OF THE STATE ARCHITECT
OFFICE OF REGULATION SERVICES
PC 04-114102
AC___ FLS___ SS RAF
DATE AUG - 4 2015

REVISIONS
1
2
3
4
5
6
7
8

SILVER CREEK INDUSTRIES
24' x 40' PC - 2:12 PITCH

PROJECT NO:	
DRAWN BY:	
SCALE:	AS NOTED
DATE:	01-30-15

P.C. SHEET NUMBER
A-0.5A

CERTIFICATE OF COMPLIANCE - NONRESIDENTIAL PERFORMANCE COMPLIANCE METHOD — NRCC-PRF-01-E

Project Name: 24 x 40 SCI PC — Calculation Date/Time: — Page 1 of 6

Compliance Scope: New Complete Building including Envelope, Lighting and HVAC — Input File Name:

A. GENERAL INFORMATION					
01	Project Address	ZONE 15	21	CompExpert SoftWare	CBECC-Com 2013-5a (687)
02	City	ZONE 15	22	Compliance Manager Version	BENCmpMgr 2013-5a (687)
03	Zip code		23	Rule Set Filename	CA 2013 Nonresidential. Vers. 3.0 (CBD 20^3 NonRes.bin)
04	Climate Zone	Climate Zone 15	24	Building Type	Nonresidential
05	Building Final Orientation	180	25	Construction Type	
06	Number of Above Grade Stories	1	26	North Wall Area (ft2)	264
07	Number of Below Grade Stories	0	27	East Wall Area (ft2)	440
08	Number of Dwelling Units	0	28	South Wall Area (ft2)	264
09	Total Conditioned Floor Area (ft2)	960	29	West Wall Area (ft2)	440
10	Total Unconditioned Floor Area (ft2)		30	Total Exterior Wall Area (ft2)	1,408
11	Addition Conditioned Floor Area (ft2)		31	North Glazing Area (ft2) / Glazing Ratio	32 / 12%
12	Addition Unconditioned Floor Area(ft2)		32	East Glazing Area (ft2) / Glazing Ratio	0 / 0%
13	Number of Thermal Zones	1	33	South Glazing Area (ft2) / Glazing Ratio	32 / 12%
14	Number of Thermal Zones (conditioned)	1	34	West Glazing Area (ft2) / Glazing Ratio	0 / 0%
15	Number of Air Systems	1	35	Total Glazing Area (ft2) /Glazing Ratio	64 / 5%
16	Number of Zonal Systems	0	36	Roof Area (ft2)	960
17	Number of Terminal Units	0	37	Skylight Area (ft2) / Skylight Roof Ratio	0 / 0%
18			38		
19			39		
20			40		

CERTIFICATE OF COMPLIANCE - NONRESIDENTIAL PERFORMANCE COMPLIANCE METHOD — NRCC-PRF-01-E

Project Name: 24 x 40 SCI PC — Calculation Date/Time: — Page 2 of 6

Compliance Scope: New Complete Building including Envelope, Lighting and HVAC — Input File Name:

B. COMPLIANCE RESULTS				
01	BUILDING COMPLIES			
02	Special Features are Required -TBD			
03	HERS Verification is Required -TBD			
	ANNUAL TDV ENERGY USE SUMMARY (kBtu/ft2/yr)			
	04	05	06	07
Energy Component	Standard Design	Proposed Design	Compliance Margin	Percent Better than Standard*
Space Heating	30.4	30.8	-0.2	-0.7%
Space Cooling	205.5	234.7	-46.2	-24.7%
Indoor Fans	134.7	92.5	62.2	38.9%
Heat Rejection	--	--	--	--
Pumps & Misc.	--	--	--	--
Domestic Hot Water	--	--	--	--
Lighting	83.8	54.8	29.0	53.3%
COMPLIANCE TOTAL	454.4	473.3	13.9	2.0%
Receptacle	55.5	55.5		0.0%
Process	--	--		--
Process Lighting	--	--		--
TOTAL	509.7	528.8		2.0%

C. OCCUPANCY SUMMARY INFORMATION -							
01	02	03	04	05	06	07	08
				Allowed (Baseline) Lighting Power			
					Additional (Custom) Allowances		
Occupancy Type	Floor Area (ft2)	Installed Lighting Power (Watts)	Lighting Control Credits (Watts)	General Lighting Power Allowance (Watts)	Area Category (Watts)	Tailored Method (Watts)	Total Allowed Lighting Power (Watts)
Classrooms, Lecture, Training, Vocational Areas	960	744	555	1,152			1,152

CERTIFICATE OF COMPLIANCE - NONRESIDENTIAL PERFORMANCE COMPLIANCE METHOD — NRCC-PRF-01-E

Project Name: 24 x 40 SCI PC — Calculation Date/Time: — Page 3 of 6

Compliance Scope: New Complete Building including Envelope, Lighting and HVAC — Input File Name:

D. ENVELOPE SUMMARY INFORMATION							
01	02	03	04	05	06	07	08
				Assembly Layers			
Surface Name	Surface Type	U-Factor / F-Factor / C-Factor		Framing Type	Framing Spacing	R-value	Certified Cool Roof
SCI ROOF	Roof	U-0.05	Metal Standing Seam - 1/16 in. Fiber cement board - 63 ball - 1/2 in. Plywood - 3/4 in. Composite Framing Cavity - Wall Roof Ceiling - 4 in. or more Acoustic Tile - 1/2 in.	Metal	Roof24inOC	R-0 R-0.36 R-0.94 R-30 Cavity R-0.45 R-1.25	
SCI PLYWD FLOOR	ExteriorFloor	U-0.06	Air - Cavity - Wall Roof Ceiling - 4 in. or more Composite Framing Plywood - 1 in. Carpet - 3/4 in.	Metal	Floor24inOC	R-0.92 R-30 Cavity R-1.25 R-0.38	
2x4 T111 WALL	ExteriorWall	U-0.06	Wood siding - 1/2 in. Vapor seal - plastic film - 1/16 in. Composite Framing System Board - 1/2 in. Acoustic Tile - 1/2 in.	Wood	Wall16inOC	R-0.8 R-0.01 R-13 Cavity R-0.45 R-1.28	

E. FENESTRATION SUMMARY INFORMATION							
01	02	03	04	05	06	07	08
Name	Fenestration Type	Certification Method	Assembly Method	Frame Type	U-value	SHGC	VT
SCI - RVO 9020 - SLIDER - SSSGU CLR	Sliding	NFRC Rated	Manufactured	- specify -	0.31	0.30	0.53

F. MECHANICAL SYSTEM SUMMARY INFORMATION													
01	02	03	04					05					
			Cooling					Heating					
Equipment Name	Equipment Type	Qty	Type	SEER	EER	Rated Output kBtu/h	Type	AFUE	HSPF	Thermal Eff.	Rated Output kBtu/h	Supplemental Heat Source	Supplemental Rated Output kBtu/h
AirSystem 1	SZHP	1	Direct Expansion	13.0	9.0	53	HeatPump				53.2		

CERTIFICATE OF COMPLIANCE - NONRESIDENTIAL PERFORMANCE COMPLIANCE METHOD — NRCC-PRF-01-E

Project Name: 24 x 40 SCI PC — Calculation Date/Time: — Page 4 of 6

Compliance Scope: New Complete Building including Envelope, Lighting and HVAC — Input File Name:

G. MECHANICAL SYSTEM ECONOMIZER AND FAN SUMMARY INFORMATION											
01	02	03	04					05			
		Outside Air	Supply Fan					Return Fan			
Equipment Name	EconomizerType	CFM	CFM	HP	BHP	Control	CFM	HP	BHP	Control
AirSystem 1	NoEconomizer	720	1975.0	0.75	0.75	ConstantVolume				

H. CHILLER SUMMARY INFORMATION
Not Applicable

I. COOLING TOWER SUMMARY INFORMATION
Not Applicable

J. BOILER SUMMARY INFORMATION
Not Applicable

K. CENTRAL MECHANICAL SYSTEM - PUMP SUMMARY INFORMATION
Not Applicable

L. TERMINAL UNIT SUMMARY INFORMATION
Not Applicable

L-1. ZONAL SYSTEM SUMMARY INFORMATION
Not Applicable

M-1. DHW SUMMARY INFORMATION. FLUID SYSTEMS
Not Applicable

M-2. DHW SUMMARY INFORMATION. RECIRCULATION DHW SYSTEMS
Not Applicable

N. EXCEPTIONAL CONDITIONS COMPLIANCE CHECKLIST
Not Applicable

CERTIFICATE OF COMPLIANCE - NONRESIDENTIAL PERFORMANCE COMPLIANCE METHOD — NRCC-PRF-01-E

Project Name: 24 x 40 SCI PC — Calculation Date/Time: — Page 5 of 6

Compliance Scope: New Complete Building including Envelope, Lighting and HVAC — Input File Name:

Not Applicable.

CERTIFICATE OF COMPLIANCE - NONRESIDENTIAL PERFORMANCE COMPLIANCE METHOD — NRCC-PRF-01-E

Project Name: 24 x 40 SCI PC — Calculation Date/Time: — Page 6 of 6

Compliance Scope: New Complete Building including Envelope, Lighting and HVAC — Input File Name:

DOCUMENTATION AUTHOR'S DECLARATION STATEMENT	
I. I certify that this Certificate of Compliance documentation is accurate and complete.	
Documentation Author Name:SILVER CREEK	Documentation Author Signature:
Company:SILVER CREEK	Signature Date: 12/18/14
Address:2830 Barrett Ave - Perris CA 92571	CEA Identification (if applicable):
City/State/Zip:	Phone:951-943-5393
RESPONSIBLE PERSON'S DECLARATION STATEMENT	
I certify the following under penalty of perjury, under the laws of the State of California: 1. I hereby affirm that I am eligible under the provisions of Division 3 of the Business and Professions Code to sign this document as the person responsible for its preparation; and that I am licensed in the State of California as a civil engineer, mechanical engineer, electrical engineer, or I am a licensed architect. 2. I affirm that I am eligible under the provisions of Division 3 of the Business and Professions Code by section 5537.2 or 6737.3 to sign this document as the person responsible for its preparation; and that I am a licensed contractor performing this work. 3. I affirm that I am eligible under Division 3 of the Business and Professions Code to sign this document because it pertains to a structure or type of work described as exempt pursuant to Business and Professions Code Sections 5537, 5536 and 6737.1.	
Building Owner's Name:SILVER CREEK	Building Owner's Signature:
Address:2830 Barrett Ave - Perris CA 92571	Date Signed: 12/18/14
City/State/Zip:	Phone:951-943-5393
Responsible Designer Name:Ryan McIntosh	Responsible Designer Signature:
Company:SILVER CREEK	Date Signed: 12/18/14
Address:2830 Barrett Ave - Perris CA 92571	License:
City/State/Zip:	Phone:951-943-5393
Responsible Lighting Designer Name:SILVER CREEK	Responsible Lighting Designer Signature:
Company:SILVER CREEK	Date Signed: 12/18/14
Address:2830 Barrett Ave - Perris CA 92571	License:
City/State/Zip:	Phone:951-943-5393
Responsible Mechanical Designer Name:SILVER CREEK	Responsible Mechanical Designer Signature:
Company:SILVER CREEK	Date Signed: 12/18/14
Address:2830 Barrett Ave - Perris CA 92571	License:
City/State/Zip:	Phone:951-943-5393

Lydia Barron

Digitally signed by Lydia Barron
DN: c=California, l=Sacramento, o=California Department of General Services, ou=Division of the State Architect, =www.wetdigs.com/repository/CA Incorp. by Ref.11A8.1.TD0:590.1186=Architectural Associate, cn=Lydia Barron, email=lydia.barron@dgs.ca.gov
Date: 2015.06.30 17:22:38 -07'00'

THESE DRAWINGS AND ALL MATERIAL CONTAINED HEREIN ARE THE PROPERTY OF SILVERCREEK INDUSTRIES, INC (SCI Inc) AND SHALL NOT BE REPRODUCED, COPIED OR OTHERWISE DISPOSED OF DIRECTLY OR INDIRECTLY AND SHALL NOT BE USED IN WHOLE OR IN PART TO ASSIST IN THE MAKING OF OR FOR THE PURPOSE OF FURNISHING ANY INFORMATION FOR THE MAKING OF DRAWINGS, PRINTS, APPARATUS OR PARTS THEREOF WITHOUT THE FULL KNOWLEDGE AND WRITTEN CONSENT OF SCI Inc.
ALL PATENTABLE MATERIAL CONTAINED HEREIN AND ORIGINATING WITH SCI Inc SHALL BE THE PROPERTY OF SCI Inc

SILVER CREEK INDUSTRIES, INC.
"BUILDING FOR THE NEXT GENERATION"
SILVER CREEK
2830 BARRETT AVE PERRIS, CALIFORNIA 92571
PHONE: 951-943-5393 FAX: 951-943-2211

PROJECT NAME:

24x40 STOCKPILE OFFICE BUILDING

SHEET TITLE:

ENERGY CALC'S. PRF FORMS ZONE 15 WORST CASE

LICENSED ARCHITECT — ROBERT D. HIVELY — C-33467 — REN 01-31-2017 — STATE OF CALIFORNIA

ARCHITECT OF RECORD SUBMISSION DATE

FILE #: 15-6
IDENTIFICATION STAMP
DIV. OF THE STATE ARCHITECT
OFFICE OF REGULATION SERVICES
03-118270
AC. ___ FLS. ___ SS. CL
DATE NOV - 8 2017
TRACKING #: 63221-290

PROJECT SPECIFIC STATE AGENCY APPROVAL

IDENTIFICATION STAMP
DIV. OF THE STATE ARCHITECT
04 116284
ACS. ___ FLS. D SS. RAF
DATE MAY 18 2017

ORIGINAL PC STATE AGENCY APPROVAL

PRE-CHECK (PC) DOCUMENT
CODE 2013 DPC
1-5 SEPARATE SUBMITTAL OF SECTION FOR CONSTRUCTION IS REQUIRED

IDENTIFICATION STAMP
DIV. OF THE STATE ARCHITECT
OFFICE OF REGULATION SERVICES
PC 04-114102
AC. ___ FLS. ___ SS. RAF
DATE AUG - 4 2015

REVISIONS

1
2
3
4
5
6
7
8

SILVER CREEK INDUSTRIES
24' x 40' PC - 2:12 PITCH

PROJECT NO:
DRAWN BY:
SCALE: AS NOTED
DATE: 01-30-15

P.C. SHEET NUMBER

A-0.5B

CERTIFICATE OF COMPLIANCE - NONRESIDENTIAL PERFORMANCE COMPLIANCE METHOD — NRCC-PRF-01-E

Project Name: 24 x 40 SCI FC — Calculation Date/Time: — Page 1 of 6

Compliance Scope: New Complete Building including Envelope, Lighting and HVAC — Input File Name:

A. GENERAL INFORMATION					
01	Project Address	ZONE 16	21	Compliance Software	CBECC-Com 2013-5a (667)
02	City	ZONE 16	22	Compliance Manager Version	MCMCmpMgr 2013-3a (667)
03	Zip code		23	Rule Set Filename	CA 2013 Nonresidential, Vers. 2 0 (CEC 2013 HcrPlus.rsm)
04	Climate Zone	ClimateZone16	24	Building Type	Nonresidential
05	Building Front Orientation	270	25	Construction Type	
06	Number of Above Grade Stories	1	26	North Wall Area (ft2)	284
07	Number of Below Grade Stories	0	27	East Wall Area (ft2)	440
08	Number of Dwelling Units	0	28	South Wall Area (ft2)	284
09	Total Conditioned Floor Area (ft2)	960	29	West Wall Area (ft2)	440
10	Total Unconditioned Floor Area (ft2)		30	Total Exterior Wall Area (ft2)	1,448
11	Addition Conditioned Floor Area (ft2)		31	North Glazing Area (ft2) / Glazing Ratio	32 / 12%
12	Addition Unconditioned Floor Area(ft2)		32	East Glazing Area (ft2) / Glazing Ratio	0 / 0%
13	Number of Thermal Zones	1	33	South Glazing Area (ft2) / Glazing Ratio	32 / 12%
14	Number of Thermal Zones (modificaed)	1	34	West Glazing Area (ft2) / Glazing Ratio	0 / 0%
15	Number of HV Systems	1	35	Total Glazing Area (ft2) /Glazing Ratio	64 / 5%
16	Number of Zonal Systems	0	36	Roof Area (ft2)	960
17	Number of Terminal Units	0	37	Skylight Area (ft2) /Skylight-Roof Ratio	0 / 0%
18			38		
19			39		
20			40		

CA Building Energy Efficiency Standards - 2013 Nonresidential Compliance — Report Version: PRF01-0032014-687 — Report Generated at: 2014-12-31T09:07:03

CERTIFICATE OF COMPLIANCE - NONRESIDENTIAL PERFORMANCE COMPLIANCE METHOD — NRCC-PRF-01-E

Project Name: 24 x 40 SCI FC — Calculation Date/Time: — Page 2 of 6

Compliance Scope: New Complete Building including Envelope, Lighting and HVAC — Input File Name:

B. COMPLIANCE RESULTS				
01	BUILDING COMPLIES			
02	Special Features are Required -TBD			
03	HERS Verification is Required - TBD			
ANNUAL TDV ENERGY USE SUMMARY (kBtu/ft2yr)				
	04	05	06	07
Energy Component	Standard Design	Proposed Design	Compliance Margin	Percent Better than Standard*
Space Heating	239.1	277.2	-38.1	-16.4%
Space Cooling	98.8	121.0	-24.2	-25.0%
Interior Lighting	103.8	61.8	61.1	40.9%
Heat Rejection	--	--	--	--
Pumps & Misc.	--	--	--	--
Domestic Hot Water	--	--	--	--
Lighting	51.6	24.3	27.3	52.9%
COMPLIANCE TOTAL	497.4	513.3	25.1	4.7%
Receptacle	68.8	68.8		0.0%
Process	--	--		--
Process Lighting	--	--		--
TOTAL	604.2	679.1		4.3%

C. OCCUPANCY SUMMARY INFORMATION							
01	02	03	04	05	06	07	08
				Allowed (Baseline) Lighting Power			
				Additional (Custom) Allowance			
Occupancy Type	Floor Area (ft2)	Installed Lighting Power (Watts)	Lighting Control Credits (Watts)	General Lighting Power Allowance (Watts)	Area Category (Watts)	Tailored Method (Watts)	Total Allowed Lighting Power (Watts)
Classrooms, Lecture, Training, Vocational Areas	960	764	189	1,152			1,152

CA Building Energy Efficiency Standards - 2013 Nonresidential Compliance — Report Version: PRF01-0032014-687 — Report Generated at: 2014-12-31T09:07:03

CERTIFICATE OF COMPLIANCE - NONRESIDENTIAL PERFORMANCE COMPLIANCE METHOD — NRCC-PRF-01-E

Project Name: 24 x 40 SCI FC — Calculation Date/Time: — Page 3 of 6

Compliance Scope: New Complete Building including Envelope, Lighting and HVAC — Input File Name:

D. ENVELOPE SUMMARY INFORMATION							
01	02	03	04	05	06	07	08
				Assembly Layers			
Surface Name	Surface Type	U-Factor / F-Factor / C-Factor	Assembly Layers	Framing Type	Framing Spacing	R-value	Certified Cool Roof
SCI ROOF	Roof	U-0.05	Metal Standing Seam - 1/16 in. Fiber cement board - 83 lb/ft3 - 1/2 in. Plywood - 1 in. Composite Framing Air - Cavity - Wall Roof Ceiling - 4 in. or more Acoustic Tile - 1/2 in.	Metal	RoofSHGC	R-0 R-0.04 R-0.04 R-30 Cavity R-0.02 R-7.26	
SCI PLYWD FLOOR	Exterior/Floor	U-0.06	Air - Cavity - Wall Roof Ceiling - 4 in. or more Composite Framing Plywood - 1 in. Carpet - 3/4 in.	Metal	FloorSHGC	R-0.92 R-30 Cavity R-1.22 R-2.36	
2x4 T111 WALL	Exterior/Wall	U-0.08	Wood siding - 1/2 in. Vapor seal - plastic film - 1/16 in. Composite Framing Gypsum Board - 1/2 in. Acoustic Tile - 1/2 in	Wood	WallSHGC	R-0.9 R-0.01 R-13 Cavity R-0.45 R-1.28	

E. FENESTRATION SUMMARY INFORMATION							
01	02	03	04	05	06	07	08
Name	Fenestration Type	Certification Method	Assembly Method	Frame Type	U-value	SHGC	VT
SCI - IWD 6200 - BLDER - SB60 / CLR.	Sliding	NFRC Rated	Manufactured	- specify -	0.61	0.35	0.43

F. MECHANICAL SYSTEM SUMMARY INFORMATION													
01	02	03	04					05					
			Cooling					Heating					
Equipment Name	Equipment Type	Qty	Type	SEER	EER	Rated Output kBtuh	Type	AFUE	HSPF	Thermal Eff.	Rated Output kBtuh	Supplemental Heat Source	Supplemental Rated Output kBtuh
AirSystem 1	SZAC	1	Unspecified paackaged	13.0	8.0	65	Furnace				80.0		

CA Building Energy Efficiency Standards - 2013 Nonresidential Compliance — Report Version: PRF01-0032014-687 — Report Generated at: 2014-12-31T09:07:03

CERTIFICATE OF COMPLIANCE - NONRESIDENTIAL PERFORMANCE COMPLIANCE METHOD — NRCC-PRF-01-E

Project Name: 24 x 40 SCI FC — Calculation Date/Time: — Page 4 of 6

Compliance Scope: New Complete Building including Envelope, Lighting and HVAC — Input File Name:

G. MECHANICAL SYSTEM ECONOMIZER AND FAN SUMMARY INFORMATION											
01	02	03	04					05			
		Outside Air	Supply Fan					Return Fan			
Equipment Name	Economizer Type	CFM	CFM	HP	SHP	Control	CFM	HP	SHP	Control
AirSystem 1	NoEconomizer	750	1875.0	0.75	0.75	CommonVAV unit				

H. CHILLER SUMMARY INFORMATION
Not Applicable

I. COOLING TOWER SUMMARY INFORMATION
Not Applicable

J. BOILER SUMMARY INFORMATION
Not Applicable

K. CENTRAL MECHANICAL SYSTEM - PUMP SUMMARY INFORMATION
Not Applicable

L. TERMINAL UNIT SUMMARY INFORMATION
Not Applicable

L-1. ZONAL SYSTEM SUMMARY INFORMATION
Not Applicable

M-1. DHW SUMMARY INFORMATION: FLUID SYSTEMS
Not Applicable

M-2. DHW SUMMARY INFORMATION: RECIRCULATION DHW SYSTEMS
Not Applicable

N. EXCEPTIONAL CONDITIONS COMPLIANCE CHECKLIST
Not Applicable

CA Building Energy Efficiency Standards - 2013 Nonresidential Compliance — Report Version: PRF01-0032014-687 — Report Generated at: 2014-12-31T09:07:03

CERTIFICATE OF COMPLIANCE - NONRESIDENTIAL PERFORMANCE COMPLIANCE METHOD — NRCC-PRF-01-E

Project Name: 24 x 40 SCI FC — Calculation Date/Time: — Page 5 of 6

Compliance Scope: New Complete Building including Envelope, Lighting and HVAC — Input File Name:

Not Applicable.

CA Building Energy Efficiency Standards - 2013 Nonresidential Compliance — Report Version: PRF01-0032014-687 — Report Generated at: 2014-12-31T09:07:03

CERTIFICATE OF COMPLIANCE - NONRESIDENTIAL PERFORMANCE COMPLIANCE METHOD — NRCC-PRF-01-E

Project Name: 24 x 40 SCI FC — Calculation Date/Time: — Page 6 of 6

Compliance Scope: New Complete Building including Envelope, Lighting and HVAC — Input File Name:

DOCUMENTATION AUTHOR'S DECLARATION STATEMENT	
I. I certify that this Certificate of Compliance documentation is accurate and complete.	
Documentation Author Name:SILVER CREEK	Documentation Author Signature:
Company:SILVER CREEK	Signature Date: 12/31/14
Address:2830 Barrett Ave - Perris CA 92571	City License(s)(where if applicable):
City/State/Zip:	Phone:951-943-5393
RESPONSIBLE PERSON'S DECLARATION STATEMENT	
I certify the following under penalty of perjury, under the laws of the State of California:	
A. I hereby affirm that I am eligible under the provisions of Division 3 of the Business and Professions Code to sign this document as the person responsible for its preparation and that I am licensed in the State of California as a civil engineer, mechanical engineer, electrical engineer, or I am a licensed architect.	
B. I affirm that I am eligible under the provisions of Division 3 of the Business and Professions Code by section 5537.2 or 6737.3 to sign this document as the person responsible for its preparation; and that I am a licensed contractor performing this work.	
C. I affirm that I am eligible under Division 3 of the Business and Professions Code to sign this document because it pertains to a structure or type of work described as exempt pursuant to Business and Professions Code Sections 5537, 5538 and 6737.1.	
Building Owner's Name:SILVER CREEK	Building Owner's Signature:
Address:2830 Barrett Ave - Perris CA 92571	Date Signed: 12/31/14
City/State/Zip:	Phone:951-943-5393
Responsible Designer Name:Ryan McIntosh	Responsible Designer Signature:
Company:SILVER CREEK	Date Signed: 12/31/14
Address:2830 Barrett Ave - Perris CA 92571	License: 663257
City/State/Zip:	Phone:951-943-5393
Responsible Lighting Designer Name:SILVER CREEK	Responsible Lighting Designer Signature:
Company:SILVER CREEK	Date Signed: 12/31/14
Address:2830 Barrett Ave - Perris CA 92571	License: 663257
City/State/Zip:	Phone:951-943-5393
Responsible Mechanical Designer Name:SILVER CREEK	Responsible Mechanical Designer Signature:
Company:SILVER CREEK	Date Signed: 12/31/14
Address:2830 Barrett Ave - Perris CA 92571	License: 663257
City/State/Zip:	Phone:951-943-5393

CA Building Energy Efficiency Standards - 2013 Nonresidential Compliance — Report Version: PRF01-0032014-687 — Report Generated at: 2014-12-31T09:07:03

Lydia Barron

Digitally signed by Lydia Barron
DN: c=California, l=Sacramento, o=California Department of General Services, ou=Division of the State Architect, ou=www.verisign.com/repository/CPS Incorp. by Ref.,LIABILITY LTD.(c)99, title=Architectural Associate, cn=Lydia Barron, email=lydia.barron@dgs.ca.gov
Date: 2015.05.30 17:24:47 -07'00'

THESE DRAWINGS AND ALL MATERIAL CONTAINED HEREIN ARE THE PROPERTY OF SILVERCREEK INDUSTRIES, INC (SCI Inc) AND SHALL NOT BE REPRODUCED, COPIED OR OTHERWISE DISPOSED OF DIRECTLY OR INDIRECTLY AND SHALL NOT BE USED IN WHOLE OR IN PART TO ASSIST IN THE MAKING OF OR FOR THE PURPOSE OF FURNISHING ANY INFORMATION FOR THE MAKING OF DRAWINGS, PRINTS, APPARATUS OR PARTS THEREOF WITHOUT THE FULL KNOWLEDGE AND WRITTEN CONSENT OF SCI Inc.
ALL PATENTABLE MATERIAL CONTAINED HEREIN AND ORIGINATING WITH SCI Inc SHALL BE THE PROPERTY OF SCI Inc

SILVER CREEK INDUSTRIES, INC.
"BUILDING FOR THE NEXT GENERATION"
SILVER CREEK
2830 BARRETT AVE PERRIS, CALIFORNIA 92571
PHONE: 951-943-5393 FAX: 951-943-2211

PROJECT NAME:

24x40 STOCKPILE OFFICE BUILDING

SHEET TITLE:

ENERGY CALC'S. PRF FORMS ZONE 16 WORST CASE

LICENSED ARCHITECT JACK SHILLAM C-33467 REN 01-31-2017 STATE OF CALIFORNIA

ARCHITECT OF RECORD SUBMISSION DATE

FILE #: 15-6
IDENTIFICATION STAMP
DIV. OF THE STATE ARCHITECT
OFFICE OF REGULATION SERVICES
03-118270
AC. FLS SS
DATE NOV - 8 2017
TRACKING #: 63221-290

PROJECT SPECIFIC STATE AGENCY APPROVAL

IDENTIFICATION STAMP
DIV. OF THE STATE ARCHITECT
04 116284
ACS FLS SS RAF
DATE MAY 18 2017

ORIGINAL PC STATE AGENCY APPROVAL

PRE-CHECK (PC) DOCUMENT CODE 2013 CBC
A SEPARATE PROJECT APPLICATION FOR CONSTRUCTION IS REQUIRED

IDENTIFICATION STAMP
DIV. OF THE STATE ARCHITECT
OFFICE OF REGULATION SERVICES
PC 04-114102
AC. FLS SS RAF
DATE AUG - 4 2015

REVISIONS

1
2
3
4
5
6
7
8

SILVER CREEK INDUSTRIES
24' x 40' PC - 2:12 PITCH

PROJECT NO:	
DRAWN BY:	
SCALE:	AS NOTED
DATE:	01-30-15

P.C. SHEET NUMBER

A-0.5C

STATE OF CALIFORNIA
Electrical Power Distribution
CEC-NRCC-ELC-01-E (Revised 09/14) — CALIFORNIA ENERGY COMMISSION
CERTIFICATE OF COMPLIANCE — NRCC-ELC-01-E
Electrical Power Distribution — (Page 1 of 9)
Project Name: 24' x 40' SCI PC — Date Prepared: MAR 15TH

Project Address	Climate Zone: 1-15
General Information	Conditioned Floor Area: 960 / Unconditioned Floor Area:
Building Type:	☒ Nonresidential ☐ High-Rise Residential ☐ Hotel/Motel
☒ Schools	☒ Relocatable Public Schools ☒ Conditioned Spaces ☐ Unconditioned Spaces
Phase of Construction:	☒ - New Construction ☐ Addition ☐ Alteration

A. Electrical Service Metering

☒ Each newly installed electrical service (in both existing and newly constructed buildings) is required to be metered, as set out in Table 130.5-A, which is reproduced below.

☐ Fill out a separate line for each electrical service that is connected to the building.

Electrical Service Schedule	Electrical Service Rating	Metering Capabilities (check all that are present)						Field Inspector	
A	B	C	D	E	F		G		
Designation/location in building/description	kVA	Instantaneous kW demand	Instantaneous kVAr demand	Historical peak demand (kW)	Historical peak demand (kVA)	kWh	Resettable kWh	kWh year one period	Pass	Fail

STATE OF CALIFORNIA
Electrical Power Distribution
CEC-NRCC-ELC-01-E (Revised 09/14) — CALIFORNIA ENERGY COMMISSION
CERTIFICATE OF COMPLIANCE — NRCC-ELC-01-E
Electrical Power Distribution — (Page 2 of 9)
Project Name: — Date Prepared:

		☐	☐	☐	☐	☐	☐
		☐	☐	☐	☐	☐	☐
		☐	☐	☐	☐	☐	☐
		☐	☐	☐	☐	☐	☐
		☐	☐	☐	☐	☑	☐
		☐	☐	☐	☐	☐	☐
		☐	☐	☐	☐	☐	☐
		☐	☐	☐	☐	☐	☐
		☐	☐	☐	☐	☐	☐
		☐	☐	☐	☐	☐	☐
		☐	☐	☐	☐	☐	☐

1) PV
2) SOLAR PROVIDER
3) METER INFO AS
4) METER AS SITE
5) AREA OF SITE
6) SUBMITTAL

Table 130.5-A - MINIMUM REQUIREMENTS FOR METERING OF ELECTRICAL LOAD

Meter Rating (kVA)	50 kVA or less	More than 50kVA and less than or equal to 250 kVA	More than 250 kVA and less than or equal to 1000kVA	Services rated more than 1000kVA
Instantaneous (at the time) kW demand	Not required	Not required	Not required	Not required
Historical peak demand (kW)				
Resettable kWh				
kWh per rate period	Not required	Not required	Not required	Not required

STATE OF CALIFORNIA
Electrical Power Distribution
CEC-NRCC-ELC-01-E (Revised 09/14) — CALIFORNIA ENERGY COMMISSION
CERTIFICATE OF COMPLIANCE — NRCC-ELC-01-E
Electrical Power Distribution — (Page 3 of 9)
Project Name: — Date Prepared:

B. Disaggregation of Electrical Circuits

☐ Each newly installed switchboard, panel, and motor control center (in both existing and newly constructed buildings) is required to be disaggregated according to the requirements of Table 130.5-B, shown on the next page.

☐ Individual branch circuits, taps or disconnects that require overcurrent protection devices rated 60A or greater are exempt.

☐ As an alternative, current transformers can be added for individual branch circuits and loads throughout the building, and a permanent measurement system can be installed. In this case, disaggregated wiring would not be required as long as the metering system allows the equivalent disaggregated measurements.

☐ Fill out a separate line for each switchboard, motor control center, panelboard and subpanel.

Switchboard, motor control center, panelboard or subpanel	Electrical Service that supplies that switchboard or panel	Electrical Service Rating	Field Inspector Pass	Fail

STATE OF CALIFORNIA
Electrical Power Distribution
CEC-NRCC-ELC-01-E (Revised 09/14) — CALIFORNIA ENERGY COMMISSION
CERTIFICATE OF COMPLIANCE — NRCC-ELC-01-E
Electrical Power Distribution — (Page 4 of 9)
Project Name: — Date Prepared:

A	B	C		
Designation/location in building/description	Designation/location in building/description	kVA		
MS	EACH CLASSROOM	WILL BE PER SOLAR PROVIDER	4.50	

STATE OF CALIFORNIA
OUTDOOR LIGHTING
CEC-NRCC-LTO-01-E (Revised 09/14) — CALIFORNIA ENERGY COMMISSION
CERTIFICATE OF COMPLIANCE — NRCC-LTO-01-E
Outdoor Lighting — (Page 1 of 4)
Project Name: 24' x 40' SCI PC — Date Prepared: 10/15/14

Project Address:	Total Illuminated Hardscape Area
General Information	
Phase of Construction: ☐ New Construction ☐ Addition ☐ Alteration	
Outdoor Lighting Zone (OLZ) ☐ OLZ-1 ☐ OLZ-2 ☒ OLZ-3 ☐ OLZ-4	

I have confirmed with the AHJ which OLZ applies to this site. For default lighting zone designations, see Title 24 Part 6, §10-114

LIGHTING COMPLIANCE DOCUMENTS (check box for each document included)

For detailed instructions on the use of this and all Energy Efficiency Standards compliance documents, refer to the Nonresidential Manual published by the California Energy Commission.

☒	NRCC-LTO-01-E	Certificate of Compliance
☐	NRCC-LTO-02-E	Outdoor Lighting Controls Certificate of Compliance
☒	NRCC-LTO-03-E	Outdoor Lighting Power Allowance Certificate of Compliance

Summary of Allowed Outdoor Lighting Power			Watts
1.	Sum Total ALLOWED Outdoor Lighting Wattage from NRCC-LTO-03-E, page 1	≥	30
	Complies ONLY if Installed ≤ Allowed		↕
2.	Sum Total INSTALLED Outdoor Lighting Wattage from NRCC-LTO-01-E, page 3		30

Declaration of Required Installation Certificates – Declare by checking all installation Certificates that will be submitted. (Retain copies and verify forms are completed and signed.)

☒ NRCI-LTO-01-E - Must be submitted for all buildings — ☐ Field Inspector
☐ NRCI-LTO-02-E - Must be submitted for a lighting control system, or for an Energy Management Control System (EMCS), to be recognized for compliance. — ☐ Field Inspector

Declaration of Required Certificates of Acceptance – Declare by checking all of the Certificates of Acceptance that will be submitted. (Retain copies and verify forms are completed and signed.)

☒ NRCA-LTO-02-A - Must be submitted for outdoor lighting controls. — ☐ Field Inspector

STATE OF CALIFORNIA
OUTDOOR LIGHTING
CEC-NRCC-LTO-01-E (Revised 09/14) — CALIFORNIA ENERGY COMMISSION
CERTIFICATE OF COMPLIANCE — NRCC-LTO-01-E
Outdoor Lighting — (Page 2 of 4)
Project Name: — Date Prepared:

Schedule of luminaires exempt from the outdoor lighting power requirements in §140.7

Name or Symbol	Description of exempt luminaire in accordance with the exemptions

Schedule of luminaires exempt from the cutoff requirements in §130.2(b)

Name or Symbol	Description of exempt luminaire in accordance with the exemptions

Schedule of luminaires exempt from the outdoor lighting control requirements in §130.2(c)

Name or Symbol	Description of exempt luminaire in accordance with the exemptions
TOP OF LIGHT	< 30W, NO TRUE LAND BOUNDARY

STATE OF CALIFORNIA
OUTDOOR LIGHTING
CEC-NRCC-LTO-01-E (Revised 09/14) — CALIFORNIA ENERGY COMMISSION
CERTIFICATE OF COMPLIANCE — NRCC-LTO-01-E
Outdoor Lighting — (Page 3 of 4)
Project Name: — Date Prepared:

A. OUTDOOR LIGHTING SCHEDULE and FIELD INSPECTION ENERGY CHECKLIST

Luminaire Schedule		Installed Watts					Location	Cutoff	Field Inspector	
A	B	C	D	E	F		G	H	I	
Name or Item Tag	Complete Luminaire Description	Watts per Luminaire	How wattage was determined: CEC Default from MAX	How wattage was determined: According to §130.0(c)	Number of Luminaires	Total Installed Watts (C x E)	Primary Function area in which these luminaires are installed	BUG Rating	Pass	Fail
TOP	30W CANOPY LED LIGHT FIXTURE	30	☐	☒	1	30	ENTRY DOOR	TOP CUTOFF	☐	☐
			☐	☐					☐	☐
			☐	☐					☐	☐
			☐	☐			

STATE OF CALIFORNIA
INDOOR LIGHTING
CEC-NRCC-LTI-01-E (Revised 09/14) — CALIFORNIA ENERGY COMMISSION
CERTIFICATE OF COMPLIANCE — NRCC-LTI-01-E
Indoor Lighting — (Page 1 of 5)
Project Name: 24' x 40' SCI PC — Date Prepared: 10/15/14

Climate Zone: 1-15	Conditioned Floor Area: 960
	Unconditioned Floor Area: —

General Information

Building Type:	☒ Nonresidential	☐ High-Rise Residential	☐ Hotel/Motel		
☒ Schools	☒ Relocatable Public Schools	☐ Conditioned Spaces	☐ Unconditioned Spaces		
Phase of Construction:	☒ New Construction	☐ Addition	☐ Alteration		
Method of Compliance:	☐ Complete Building	☒ Area Category	☐ Tailored		

LIGHTING COMPLIANCE DOCUMENTS (select yes for each document included)

For detailed instructions on the use of this and all Energy Efficiency Standards compliance documents, refer to the Nonresidential Manual published by the California Energy Commission.

YES	NO	FORM	TITLE
✓		NRCC-LTI-01-E	Certificate of Compliance. All Pages required on plans for all submittals.
✓		NRCC-LTI-02-E	Lighting Controls, Certificate of Compliance, and PAF Calculation. All Pages required on plans for all submittals.
	☒	NRCC-LTI-03-E	Indoor Lighting Power Allowance
	✓	NRCC-LTI-04-E	Tailored Method Worksheets
	✓	NRCC-LTI-05-E	Line Voltage Track Lighting Worksheets

Summary of Allowed Lighting Power

Conditioned and Unconditioned Spaces Lighting must not be combined for compliance

	Indoor Lighting Power for Conditioned Spaces		Watts	Indoor Lighting Power for Unconditioned Spaces	Watts
1.	Installed Lighting NRCC-LTI-01-E, page 4	+	744	Installed Lighting NRCC-LTI-01-E, page 4 +	
2.	PORTABLE ONLY FOR OFFICES NRCC-LTI-05-E, page 3	+	—		
3.	Minus Lighting Control Credits NRCC-LTI-02-E, page 2	-	186	Minus Lighting Control Credits NRCC-LTI-02-E, page 2 -	
4.	Adjusted Installed Lighting Power (row 1 plus row 2 minus row 3)	=	558	Adjusted Installed Lighting Power (row 1 minus row 3) =	

STATE OF CALIFORNIA
INDOOR LIGHTING
CEC-NRCC-LTI-01-E (Revised 09/14) — CALIFORNIA ENERGY COMMISSION
CERTIFICATE OF COMPLIANCE — NRCC-LTI-01-E
Indoor Lighting — (Page 2 of 5)
Project Name: — Date Prepared:

5.	Complies ONLY if Installed ≤ Allowed	Complies ONLY if Installed ≤ Allowed	5.
6.	Allowed Lighting Power Conditioned NRCC-LTI-03-E, page 1	1152	Allowed Lighting Power Unconditioned NRCC-LTI-03-E, page 1

Declaration of Required Installation Certificates – Declare by selecting yes for all Installation Certificates that will be submitted. (Retain copies and verify forms are completed and signed.)

YES	NO	Form/Title	
✓		NRCI-LTI-01-E - Must be submitted for all buildings	☐ Field Inspector
	✓	NRCI-LTI-02-E - Must be submitted for a lighting control system, or for an Energy Management Control System (EMCS), to be recognized for compliance.	☐ Field Inspector
	✓	NRCI-LTI-03-E - Must be submitted for a line-voltage track lighting integral current limiter, or for a supplementary overcurrent protection panel used to energize only line-voltage track lighting, to be recognized for compliance.	☐ Field Inspector
	✓	NRCI-LTI-04-E - Must be submitted for two interlocked systems serving an auditorium, a convention center, a conference room, a multipurpose room, or a theater to be recognized for compliance.	☐ Field Inspector
✓		NRCI-LTI-05-E - Must be submitted for a Power Adjustment Factor (PAF) to be recognized for compliance.	☐ Field Inspector
	✓	NRCI-LTI-06-E - Must be submitted for additional wattage installed in a video conferencing studio to be recognized for compliance.	☐ Field Inspector

Declaration of Required Certificates of Acceptance – Declare by checking all of the Certificates of Acceptance that will be submitted. (Retain copies and verify forms are completed and signed.)

YES	NO	Form/Title	
✓		NRCA-LTI-02-A - Must be submitted for occupancy sensors and automatic time switch controls.	☐ Field Inspector
✓		NRCA-LTI-03-A - Must be submitted for automatic daylight controls.	☐ Field Inspector
	✓	NRCA-LTI-04-A - Must be submitted for demand responsive lighting controls.	☐ Field Inspector

STATE OF CALIFORNIA
INDOOR LIGHTING
CEC-NRCC-LTI-01-E (Revised 09/14) — CALIFORNIA ENERGY COMMISSION
CERTIFICATE OF COMPLIANCE — NRCC-LTI-01-E
Indoor Lighting — (Page 3 of 5)
Project Name: — Date Prepared:

A separate Lighting Schedule Must Be Filled Out for Conditioned and Unconditioned Spaces. Installed Lighting Power listed on this Lighting Schedule is only for:
☒ CONDITIONED SPACE ☐ UNCONDITIONED SPACE

A. INDOOR LIGHTING SCHEDULE and FIELD INSPECTION ENERGY CHECKLIST

☐ The actual indoor lighting power listed on this page and on the next page includes all installed permanent and planned portable lighting systems.
☐ When Complete Building Method is used for compliance, list each different type of luminaire on separate lines.
☐ When Area Category Method or Tailored Method is used for compliance, list each different type of luminaire by each different function area on separate lines
☐ Also include track lighting in schedule, and submit the track lighting compliance form (NRCC-LTI-05-E) when line-voltage track lighting is installed.

B. Installed Portable Luminaires in Offices – Exception to Section 140.6(a)

☐ This section shall be filled out ONLY for portable luminaires in offices (As defined in §100.1). All other planned portable luminaires shall be documented on next page of this compliance form.
☐ This section is used to determine if greater than 0.3 watts of portable lighting is planned for any office
☐ Fill out a separate line for each different office. Small offices that are typical (having the same general and portable lighting) may be grouped together. This allowance shall not be traded between offices having different lighting systems.

Office Portable Luminaire Schedule	Office Installed Portable Luminaire Watts Per Square Foot							Office Location	Field Inspector
A	B	C	D	E	F	G	H	I	J
Complete luminaire Description (i.e., LED, under cabinet, furniture mounted direct/indirect)	Watts per luminaire	Number of Luminaires	Installed portable luminaire watts in this office (B x C)	Divide by Square feet	Watts per square foot (D / E)	If F > 0.3, enter F/0.3 If F ≤ 0.3, (F=0.3)	E x G	Identify Office area in which these portable luminaires are installed	Pass / Fail
									☐ ☐
									☐ ☐
									☐ ☐
									☐ ☐
									☐ ☐
Total installed portable luminaire watts that are greater than 0.3 watts per square foot per office:								Enter sum total of all pages into NRCC-LTI-01-E; Page 3.	

STATE OF CALIFORNIA
INDOOR LIGHTING
CEC-NRCC-LTI-01-E (Revised 09/14) — CALIFORNIA ENERGY COMMISSION
CERTIFICATE OF COMPLIANCE — NRCC-LTI-01-E
Indoor Lighting — (Page 4 of 5)
Project Name: — Date Prepared:

A separate Lighting Schedule Must Be Filled Out for Conditioned and Unconditioned Spaces. Installed Lighting Power listed on this Lighting Schedule is only for:
☒ CONDITIONED SPACE ☐ UNCONDITIONED SPACE

C. INDOOR LIGHTING SCHEDULE and FIELD INSPECTION ENERGY CHECKLIST

Luminaire Schedule		Installed Watts					Location	Field Inspector[1]	
A	B	C	D	E	F		G	N	
Number of Same Type Luminaires	Complete Luminaire Description (i.e. 2 lamp fluorescent troffer, F32T8, one disposable electronic ballast)	Luminaire Wattage	How wattage was determined: Manufacturer's Data	How wattage was determined: Measured Wattage	Lighting Control	Total Installed Watts (C x D x E x F)	Primary Function area in which these luminaires are installed	Pass	Fail
Typ	2x4 3 Tube T8 (1) Direct Lamp	94	☒	☐	CL	744	Class Rm	☐	☐
			☐	☐				☐	☐
			☐	☐				☐	☐
			☐	☐				☐	☐
			☐	☐				☐	☐
			☐	☐				☐	☐
			☐	☐				☐	☐
			☐	☐				☐	☐
			☐	☐				☐	☐
	INSTALLED WATTS PAGE TOTAL:					744	Enter sum total of all pages into NRCC-LTI-01-E; Page 2		

STATE OF CALIFORNIA
INDOOR LIGHTING
CEC-NRCC-LTI-01-E (Revised 09/14) — CALIFORNIA ENERGY COMMISSION
CERTIFICATE OF COMPLIANCE — NRCC-LTI-01-E
Indoor Lighting — (Page 5 of 5)
Project Name: — Date Prepared: 10/15/14

DOCUMENTATION AUTHOR'S DECLARATION STATEMENT

I. I certify that this Certificate of Compliance documentation is accurate and complete.

Documentation Author Name:	RYAN McALTONK	Documentation Author Signature:	
Company:	SILVER CREEK	Signature Date:	10/16/14
Address:	— —	CEA/HERS Certification Identification (if applicable):	—
City/State/Zip:	— —	Phone:	— —

RESPONSIBLE PERSON'S DECLARATION STATEMENT

I certify the following under penalty of perjury, under the laws of the State of California:

1. The information provided on this Certificate of Compliance is true and correct.
2. I am eligible under Division 3 of the Business and Professions Code to accept responsibility for the building design or system design identified on this Certificate of Compliance (responsible designer).
3. The energy features and performance specifications, materials, components, and manufactured devices for the building design or system design identified on this Certificate of Compliance conform to the requirements of Title 24, Part 1 and Part 6 of the California Code of Regulations.
4. The building design features or system design features identified on this Certificate of Compliance are consistent with the information provided on other applicable compliance documents, worksheets, calculations, plans and specifications submitted to the enforcement agency for approval with this building permit application.
5. I will ensure that a completed signed copy of this Certificate of Compliance shall be made available with the building permit(s) issued for the building, and made available to the enforcement agency for all applicable inspections. I understand that a completed signed copy of this Certificate of Compliance is required to be included with the documentation the builder provides to the building owner at occupancy.

Responsible Designer Name:	SILVER CREEK	Responsible Designer Signature:	
Company:	SILVER CREEK	Date Signed:	10/16/14
Address:	— —	License:	635224
City/State/Zip:	— —	Phone:	— —

STATE OF CALIFORNIA
INDOOR LIGHTING – LIGHTING CONTROLS
CEC-NRCC-LTI-02-E (Revised 09/14) — CALIFORNIA ENERGY COMMISSION
CERTIFICATE OF COMPLIANCE — NRCC-LTI-02-E
Indoor Lighting - Lighting Controls — (Page 1 of 3)
Project Name: 24 x 40 SCI PC — Date Prepared: 10/15/14

The NRCC-LTI-02-E shall be used to document all mandatory and prescriptive lighting controls that are applicable to the project.

Mandatory Lighting Control Declaration Statements (Indicate if the measure applies by checking yes or no below.)

YES	NO	Control Requirements
✓		Lighting shall be controlled by self-contained lighting control devices which are certified to the Energy Commission according to the Title 20 Appliance Efficiency Regulations in accordance with Section 110.9.
✓		Lighting shall be controlled by a lighting control a system or energy management control system in accordance with §110.9. An Installation Certificate shall be submitted in accordance with Section 130.4(b).
	✓	One or more Track Lighting Integral Current Limiters shall be installed which have been certified to the Energy Commission in accordance with §110.9 and §130.0. Additionally, an Installation Certificate shall be submitted in accordance with Section 130.4(b).
	✓	A Track Lighting Supplementary Overcurrent Protection Panel shall be installed in accordance with Section 110.9 and Section 130.0. Additionally, an Installation Certificate shall be installed in accordance with Section 130.4(b).
✓		All lighting controls and equipment shall comply with the applicable requirements in §110.9 and shall be installed in accordance with the manufacturer's instructions in accordance with Section 130.1.
✓		All luminaires shall be functionally controlled with manually switched ON and OFF lighting controls in accordance with Section 130.1(a).
	✓	General lighting shall be separately controlled from all other lighting systems in an area. Floor and wall display, window display, case display, ornamental, and special effects lighting shall each be separately controlled on circuits that are 20 amps or less. When track lighting is used, general, display, ornamental, and special effects lighting shall each be separately controlled; in accordance with Section 130.1(d)4.
✓		The general lighting of any enclosed area 100 square feet or larger, with a connected lighting load that exceeds 0.3 watts per square foot shall meet the multi-level lighting control requirements in accordance with Section 130.1(b).
✓		All installed indoor lighting shall be equipped with controls that meet the applicable Shut-OFF control requirements in Section 130.1(c).
✓		Lighting in all Daylit Zones shall be controlled in accordance with the requirements in Section 130.1(d) and daylit zones are shown on the plans.
	✓	Lighting power in buildings larger than 10,000 square feet shall be capable of being automatically reduced in response to a Demand Responsive Signal in accordance with Section 130.1(e).
✓		Before an occupancy permit is granted for a newly constructed building or area, or a new lighting system serving a building, area, or site is operated for normal use, indoor lighting controls serving the building, area, or site shall be certified as meeting the Acceptance Requirements for Code Compliance in accordance with Section 130.4.(a). The controls required to meet the Acceptance Requirements include automatic daylight controls, automatic shut-OFF controls, and demand responsive controls.

STATE OF CALIFORNIA
INDOOR LIGHTING – LIGHTING CONTROLS
CEC-NRCC-LTI-02-E (Revised 09/14) — CALIFORNIA ENERGY COMMISSION
CERTIFICATE OF COMPLIANCE — NRCC-LTI-02-E
Indoor Lighting - Lighting Controls — (Page 2 of 3)
Project Name: — Date Prepared:

A separate document must be filled out for Conditioned and Unconditioned Spaces. This page is used only for the following:
☐ CONDITIONED SPACES ☐ UNCONDITIONED SPACES

MANDATORY AND PRESCRIPTIVE INDOOR LIGHTING CONTROL SCHEDULE, PAF CALCULATION, and FIELD INSPECTION CHECKLIST

Lighting Control Schedule			Standards Complying With[1] (✓ all that apply, or enter 'N' if Exempted)							PAF Credit Calculation[2]				✓ If Acceptance Tests Required	Field Inspector	
A	B	C	D	E	F	G	H	I	J	K	L	M	N		O	
Location in Building	Type/ Description of Lighting Control (i.e.: occupancy sensor, automatic time switch, dimmer, automatic daylight, etc...)	# of Units	§131(b)1A	§131(b)1B	§131(c)1	§131(c)2	§131(d)1	§131(d)2	§131(d)3	Watts of Controlled Lighting	PAF	Credit (B x K)	Credit Allowed		Pass	Fail
Class Rm	Occ. Sch. TWO LIGHT Fixture	8	✓	✓	✓	✓		✓		744	.25	186			☐	☐
															☐	☐
															☐	☐
															☐	☐
															☐	☐
															☐	☐
															☐	☐
															☐	☐
										Control Credit PAGE TOTAL (Sum of Column M):			186			
										IF MULTIPLE PAGES ARE USED, ENTER SUM TOTAL OF Control Credit for all pages HERE (Sum of all Column M):			186			
													Enter Control Credit total into NRCC-LTI-01-E; Page 1.			

1. §130.1(a) = Manual area controls; §130.0(b) = Multi Level; §130.1(c) = Auto Shut-Off; §130.1(d) = Mandatory Daylight; §130.1(e) = Demand Responsive; §140.6(a) = Additional lighting controls installed to earn a PAF; §140.6(c) = Prescriptive Secondary Skylit Daylight Controls.
2. Check Table 140.6-A for correct Factor. PAFs shall not be traded between conditioned and unconditioned spaces. As a condition to earn a PAF, an Installation Certificate is also required to be filled out, signed, and submitted.

STATE OF CALIFORNIA
INDOOR LIGHTING – LIGHTING CONTROLS
CEC-NRCC-LTI-02-E (Revised 09/14) — CALIFORNIA ENERGY COMMISSION
CERTIFICATE OF COMPLIANCE — NRCC-LTI-02-E
Indoor Lighting - Lighting Controls — (Page 3 of 3)
Project Name: — Date Prepared: 10/15/14

DOCUMENTATION AUTHOR'S DECLARATION STATEMENT

I. I certify that this Certificate of Compliance documentation is accurate and complete.

Documentation Author Name:	RYAN McALTONK	Documentation Author Signature:	
Company:	SILVER CREEK	Signature Date:	10/16/14
Address:	— —	CEA/HERS Certification Identification (if applicable):	—
City/State/Zip:	— —	Phone:	— —

RESPONSIBLE PERSON'S DECLARATION STATEMENT

I certify the following under penalty of perjury, under the laws of the State of California:

1. The information provided on this Certificate of Compliance is true and correct.
2. I am eligible under Division 3 of the Business and Professions Code to accept responsibility for the building design or system design identified on this Certificate of Compliance (responsible designer).
3. The energy features and performance specifications, materials, components, and manufactured devices for the building design or system design identified on this Certificate of Compliance conform to the requirements of Title 24, Part 1 and Part 6 of the California Code of Regulations.
4. The building design features or system design features identified on this Certificate of Compliance are consistent with the information provided on other applicable compliance documents, worksheets, calculations, plans and specifications submitted to the enforcement agency for approval with this building permit application.
5. I will ensure that a completed signed copy of this Certificate of Compliance shall be made available with the building permit(s) issued for the building, and made available to the enforcement agency for all applicable inspections. I understand that a completed signed copy of this Certificate of Compliance is required to be included with the documentation the builder provides to the building owner at occupancy.

Responsible Designer Name:	SILVER CREEK	Responsible Designer Signature:	
Company:	SILVER CREEK	Date Signed:	10/16/14
Address:	— —	License:	635224
City/State/Zip:	— —	Phone:	— —

Lydia Barron

Digitally signed by Lydia Barron
DN: st=California, l=Sacramento, o=California Department of General Services, ou=Division of the State Architect, ou=www.verifydgs.com/repository/CPS Incorp. by Ref.,LIABILITD(c)99, title=Architectural Associate, cn=Lydia Barron, email=lydia.barron@dgs.ca.gov
Date: 2015.06.30 17:32:01 -07'00'

THESE DRAWINGS AND ALL MATERIAL CONTAINED HEREIN ARE THE PROPERTY OF SILVERCREEK INDUSTRIES, INC (SCI Inc) AND SHALL NOT BE REPRODUCED, COPIED OR OTHERWISE DISPOSED OF DIRECTLY OR INDIRECTLY AND SHALL NOT BE USED IN WHOLE OR IN PART TO ASSIST IN THE MAKING OF OR FOR THE PURPOSE OF FURNISHING ANY INFORMATION FOR THE MAKING OF DRAWINGS, PRINTS, APPARATUS OR PARTS THEREOF WITHOUT THE FULL KNOWLEDGE AND WRITTEN CONSENT OF SCI Inc.
ALL PATENTABLE MATERIAL CONTAINED HEREIN AND ORIGINATING WITH SCI Inc SHALL BE THE PROPERTY OF SCI Inc

SILVER CREEK INDUSTRIES, INC.
"BUILDING FOR THE NEXT GENERATION"
SILVER CREEK
2830 BARRETT AVE PERRIS, CALIFORNIA 92571
PHONE: 951-943-5393 FAX: 951-943-2211

PROJECT NAME:

24x40 STOCKPILE OFFICE BUILDING

SHEET TITLE:

ENERGY CALC'S. LTI FORMS 24' x 40' BLDG'S

LICENSED ARCHITECT JOHN E. SHIVELY C-33467 REN 01-31-2017 STATE OF CALIFORNIA

ARCHITECT OF RECORD SUBMISSION DATE

FILE #: 15-6
IDENTIFICATION STAMP
DIV. OF THE STATE ARCHITECT
OFFICE OF REGULATION SERVICES
03-118270
AC ___ FLS ___ SS CL
DATE NOV - 8 2017
TRACKING #: 63221-290

PROJECT SPECIFIC STATE AGENCY APPROVAL

IDENTIFICATION STAMP
DIV. OF THE STATE ARCHITECT
04 116284
ACS ___ FLS ___ SS RAF
DATE MAY 8 2017

ORIGINAL PC STATE AGENCY APPROVAL

PRE-CHECK (PC) DOCUMENT
A SEPARATE PROJECT APPLICATION FOR CONSTRUCTION IS REQUIRED

IDENTIFICATION STAMP
DIV. OF THE STATE ARCHITECT
OFFICE OF REGULATION SERVICES
PC 04-114102
AC ___ FLS ___ SS RAF
DATE AUG - 4 2015

REVISIONS
1
2
3
4
5
6
7
8

SILVER CREEK INDUSTRIES
24' x 40' PC - 2:12 PITCH

PROJECT NO:	
DRAWN BY:	
SCALE:	AS NOTED
DATE:	01-30-15

P.C. SHEET NUMBER

A-0.6C

STATE OF CALIFORNIA
Electrical Power Distribution
CEC-NRCC-ELC-01-E (Revised 06/14) — CALIFORNIA ENERGY COMMISSION

CERTIFICATE OF COMPLIANCE	NRCC-ELC-01-E
Electrical Power Distribution	(Page 1 of 9)

Project Name: 120' x 40' SCI BL. Date Prepared: 10/15/14

Project Address:	Climate Zone: 1-15	Conditioned Floor Area: 4800 / Unconditioned Floor Area:

General Information

Building Type: ☒ Nonresidential ☐ High-Rise Residential ☐ Hotel/Motel
☒ Schools ☒ Relocatable Public Schools ☒ Conditioned Spaces ☐ Unconditioned Spaces
Phase of Construction: ☒ New Construction ☐ Addition ☐ Alteration

A. Electrical Service Metering

☒ Each newly installed electrical service (in both existing and newly constructed buildings) is required to be metered, as set out in Table 130.5-A, which is reproduced below.

☐ Fill out a separate line for each electrical service that is connected to the building.

Electrical Service Schedule	Electrical Service Rating	Metering Capabilities (check all that are present)					Field Inspector	
A	B	C	D	E	F	G		
Designation/location in building/description	kVA	Instantaneous (at the time) demand (kW)	Historical peak demand (kW)	Resettable kWh	Time-of-use period	Pass	Fail

CA Building Energy Efficiency Standards - 2013 Nonresidential Compliance — June 2014

STATE OF CALIFORNIA
Electrical Power Distribution
CEC-NRCC-ELC-01-E (Revised 06/14) — CALIFORNIA ENERGY COMMISSION

CERTIFICATE OF COMPLIANCE	NRCC-ELC-01-E
Electrical Power Distribution	(Page 2 of 9)

Project Name: Date Prepared:

		☐	☐	☐	☐	☐	☐

STATE OF CALIFORNIA
OUTDOOR LIGHTING
CEC-NRCC-LTO-01-E (Revised 09/14) — CALIFORNIA ENERGY COMMISSION
CERTIFICATE OF COMPLIANCE — NRCC-LTO-01-E
Outdoor Lighting — (Page 1 of 4)
Project Name: 120' x 40' SCI PC — Date Prepared: 10/15/14

Project Address:	Total Illuminated Hardscape Area

General Information

Phase of Construction: ☒ New Construction ☐ Addition ☐ Alteration

Outdoor Lighting Zone (OLZ) ☐ OLZ-1 ☐ OLZ-2 ☒ OLZ-3 ☐ OLZ-4

I have confirmed with the AHJ which OLZ applies to this site. For default lighting zone designations, see Title 24 Part 6, §10-114

LIGHTING COMPLIANCE DOCUMENTS (check box for each document included)

For detailed instructions on the use of this and all Energy Efficiency Standards compliance documents, refer to the Nonresidential Manual published by the California Energy Commission.

- ☒ NRCC-LTO-01-E — Certificate of Compliance
- ☐ NRCC-LTO-02-E — Outdoor Lighting Controls Certificate of Compliance
- ☒ NRCC-LTO-03-E — Outdoor Lighting Power Allowance Certificate of Compliance

Summary of Allowed Outdoor Lighting Power		Watts
1.	Sum Total ALLOWED Outdoor Lighting Wattage from NRCC-LTO-03-E, page 1	150
	Compliles ONLY if Installed ≤ Allowed	↕
2.	Sum Total INSTALLED Outdoor lighting Wattage from NRCC-LTO-01-E, page 3	150

Declaration of Required Installation Certificates – Declare by checking all Installation Certificates that will be submitted. (Retain copies and verify forms are completed and signed.)

- ☒ NRCI-LTO-01-E - Must be submitted for all buildings — ☐ Field Inspector
- ☐ NRCI-LTO-02-E - Must be submitted for a lighting control system, or for an Energy Management Control Sytem (EMCS), to be recognized for compliance. — ☐ Field Inspector

Declaration of Required Certificates of Acceptance – Declare by checking all of the Certificates of Acceptance that will be submitted. (Retain copies and verify forms are completed and signed.)

- ☒ NRCA-LTO-02-A - Must be submitted for outdoor lighting controls. — ☐ Field Inspector

STATE OF CALIFORNIA
OUTDOOR LIGHTING
CEC-NRCC-LTO-01-E (Revised 09/14) — CALIFORNIA ENERGY COMMISSION
CERTIFICATE OF COMPLIANCE — NRCC-LTO-01-E
Outdoor Lighting — (Page 2 of 4)
Project Name: — Date Prepared:

Schedule of luminaires exempt from the outdoor lighting power requirements in §140.7

Name or Symbol	Description of exempt luminaire in accordance with the exemptions

Schedule of luminaires exempt from the cutoff requirements in §130.2(b)

Name or Symbol	Description of exempt luminaire in accordance with the exemptions

Schedule of luminaires exempt from the outdoor lighting control requirements in §130.2(c)

Name or Symbol	Description of exempt luminaire in accordance with the exemptions
TIP EXT LIGHT	< 30W, NO TRUE COND REQUIREMENT

STATE OF CALIFORNIA
OUTDOOR LIGHTING
CEC-NRCC-LTO-01-E (Revised 09/14) — CALIFORNIA ENERGY COMMISSION
CERTIFICATE OF COMPLIANCE — NRCC-LTO-01-E
Outdoor Lighting — (Page 3 of 4)
Project Name: — Date Prepared:

A. OUTDOOR LIGHTING SCHEDULE and FIELD INSPECTION ENERGY CHECKLIST

Luminaire Schedule		Installed Watts					Location	Cutoff	Field Inspector	
A	B	C	D		E	F	G	H	I	
Name or Item Tag	Complete Luminaire Description	Watts per Luminaire	How wattage was determined: CEC-Exterior Power Table	How wattage was determined: Manufacturer's Data	Number of Luminaires	Total Installed Watts = C x E	Primary Function area in which these luminaires are installed	Shielded Building	Pass	Fail
TIP	30W CANOPY LED WALL PACK	30	☐	☒	5	150	ENTRY DOOR	FULL CUTOFF	☐	☐
			☐	☐					☐	☐
			☐	☐					☐	☐
			☐	☐					☐	☐
			☐	☐					☐	☐
			☐	☐					☐	☐
			☐	☐					☐	☐
			☐	☐					☐	☐
			☐	☐					☐	☐
			☐	☐					☐	☐
			☐	☐					☐	☐
			☐	☐					☐	☐
			☐	☐					☐	☐
			☐	☐					☐	☐
			☐	☐					☐	☐
			☐	☐					☐	☐
			☐	☐					☐	☐
			☐	☐					☐	☐
			☐	☐					☐	☐
		INSTALLED WATTS PAGE TOTAL:				150	Enter sum total of all pages (Sum Total INSTALLED Outdoor lighting wattage) into NRCC-LTO-01-E; Page 1		150	

STATE OF CALIFORNIA
OUTDOOR LIGHTING
CEC-NRCC-LTO-01-E (Revised 09/14) — CALIFORNIA ENERGY COMMISSION
CERTIFICATE OF COMPLIANCE — NRCC-LTO-01-E
Outdoor Lighting — (Page 4 of 4)
Project Name: — Date Prepared: 10/15/14

DOCUMENTATION AUTHOR'S DECLARATION STATEMENT

1. I certify that this Certificate of Compliance documentation is accurate and complete.

Documentation Author Name:	RYAN MCINTOSH	Documentation Author Signature:	
Company:	SILVER CREEK	Signature Date:	10/16/14
Address:	- -	CEA/HERS Certification Identification (if applicable):	
City/State/Zip:	- -	Phone:	- -

RESPONSIBLE PERSON'S DECLARATION STATEMENT

I certify the following under penalty of perjury, under the laws of the State of California:

1. The information provided on this Certificate of Compliance is true and correct.
2. I am eligible under Division 3 of the Business and Professions Code to accept responsibility for the building design or system design identified on this Certificate of Compliance (responsible designer).
3. The energy features and performance specifications, materials, components, and manufactured devices for the building design or system design identified on this Certificate of Compliance conform to the requirements of Title 24, Part 1 and Part 6 of the California Code of Regulations.
4. The building design features or system design features identified on this Certificate of Compliance are consistent with the information provided on other applicable compliance documents, worksheets, calculations, plans and specifications submitted to the enforcement agency for approval with this building permit application.
5. I will ensure that a completed signed copy of this Certificate of Compliance shall be made available with the building permit(s) issued for the building, and made available to the enforcement agency for all applicable inspections. I understand that a completed signed copy of this Certificate of Compliance is required to be included with the documentation the builder provides to the building owner at occupancy.

Responsible Designer Name:	SILVER CREEK	Responsible Designer Signature:	
Company:	SILVER CREEK	Date Signed:	10/16/14
Address:	- -	License:	655229
City/State/Zip:	- -	Phone:	- -

STATE OF CALIFORNIA
REQUIRED ACCEPTANCE TESTS
CEC-NRCC-MCH-04-E (Revised 09/14) — CALIFORNIA ENERGY COMMISSION
CERTIFICATE OF COMPLIANCE — NRCC-MCH-04-E
Required Acceptance Tests — (Page 1 of 3)
Project Name: 120' x 40' SCI PC — Date Prepared: 10/15/14

MECHANICAL COMPLIANCE FORMS & WORKSHEETS (indicate if worksheet is included)

For detailed instructions on the use of this and all Energy Efficiency Standards compliance forms, refer to the 2013 Nonresidential Manual Note: The Enforcement Agency may require all forms to be incorporated onto the building plans. Forms NRCC-MCH-04-E and NRCC-MECH-05-E are alternative forms to NRCC-MCH-01-E, NRCC-MCH-02-E and NRCC-MCH-03-E for projects using only single zone packaged HVAC systems.

YES	NO	Form	Title
X		NRCC-MCH-04-E (1 of 2)	Certificate of Compliance. Required on plans when used.
X		NRCC-MCH-04-E (2 of 2)	Mechanical Acceptance Tests. Required on plans when used.
	X	NRCC-MCH-05-E (1 of 2)	HVAC Prescriptive Requirements. It is required on plans when used.
X		NRCC-MCH-05-E (2 of 2)	Mechanical SWH Equipment Summary is required for all submittals with service water heating, pools or spas. It is required on plans where applicable.

STATE OF CALIFORNIA
REQUIRED ACCEPTANCE TESTS
CEC-NRCC-MCH-04-E (Revised 09/14) — CALIFORNIA ENERGY COMMISSION
CERTIFICATE OF COMPLIANCE — NRCC-MCH-04-E
Required Acceptance Tests — (Page 2 of 3)
Project Name: — Date Prepared:

Designer:

This form is to be used by the designer and attached to the plans. Listed below are all the acceptance tests for mechanical systems. The designer is required to check the applicable boxes by all acceptance tests that apply and list all equipment that requires an acceptance test. If all equipment of a certain type requires a test, list the equipment description and the number of systems. The MA number designates the Section in the Appendix of the Nonresidential Reference Appendices Manual that describes the test. Since this form will be part of the plans, completion of this section will allow the responsible party to budget for the scope of work appropriately.

Enforcement Agency:

Systems Acceptance. Before occupancy permit is granted for a newly constructed building or space, or a new space-conditioning system serving a building or space is operated for normal use, all control devices serving the building or space shall be certified as meeting the Acceptance Requirements for Code Compliance.

Systems Acceptance. Before occupancy permit is granted. All newly installed HVAC equipment must be tested using the Acceptance Requirements. .

The NRCC-MCH-04-E form is not considered a completed form and is not to be accepted by the building department unless the correct boxes are checked. The equipment requiring testing, person performing the test (Example: HVAC installer, TAB contractor, controls contractor, PE in charge of project) and what Acceptance test must be conducted. The following checked-off forms are required for ALL newly installed and replaced equipment. In addition a Certificate of Acceptance forms shall be submitted to the building department that certifies plans, specifications, installation certificates, and operating and maintenance information meet the requirements of Section 10-103(b) and Title 24 Part 6. The building inspector must receive the properly filled out and signed forms before the building can receive final occupancy.

Test Description		MCH-02-A	MCH-03-A	MCH-04-A	MCH-05-A	MCH-06-A	MCH-07-A	MCH-11-A	MCH-12-A	MCH-14-A	MCH-19-A	Test Performed By:
Equipment Requiring Testing or Verification	# of units	Outdoor Air	Single Zone Unitary	Air Distribution Ducts	Economizer Controls	Demand Control Ventilation (DCV)	Supply Fan VAV	Automatic Demand Shed Control	FDD for Packaged DX Units	Distributed Energy Storage DX AC Systems	Energy Management Control System	
ALL HTPS	ALL	✓	✓	✓		✓						

STATE OF CALIFORNIA
REQUIRED ACCEPTANCE TESTS
CEC-NRCC-MCH-04-E (Revised 09/14) — CALIFORNIA ENERGY COMMISSION
CERTIFICATE OF COMPLIANCE — NRCC-MCH-04-E
Required Acceptance Tests — (Page 3 of 3)
Project Name: — Date Prepared: 10/15/14

DOCUMENTATION AUTHOR'S DECLARATION STATEMENT

1. I certify that this Certificate of Compliance documentation is accurate and complete.

Documentation Author Name:	RYAN MCINTOSH	Documentation Author Signature:	
Company:	SILVER CREEK	Signature Date:	10/16/14
Address:	- -	CEA/HERS Certification Identification (if applicable):	
City/State/Zip:	- -	Phone:	- -

RESPONSIBLE PERSON'S DECLARATION STATEMENT

I certify the following under penalty of perjury, under the laws of the State of California:

1. The information provided on this Certificate of Compliance is true and correct.
2. I am eligible under Division 3 of the Business and Professions Code to accept responsibility for the building design or system design identified on this Certificate of Compliance (responsible designer).
3. The energy features and performance specifications, materials, components, and manufactured devices for the building design or system design identified on this Certificate of Compliance conform to the requirements of Title 24, Part 1 and Part 6 of the California Code of Regulations.
4. The building design features or system design features identified on this Certificate of Compliance are consistent with the information provided on other applicable compliance documents, worksheets, calculations, plans and specifications submitted to the enforcement agency for approval with this building permit application.
5. I will ensure that a completed signed copy of this Certificate of Compliance shall be made available with the building permit(s) issued for the building, and made available to the enforcement agency for all applicable inspections. I understand that a completed signed copy of this Certificate of Compliance is required to be included with the documentation the builder provides to the building owner at occupancy.

Responsible Designer Name:	SILVER CREEK	Responsible Designer Signature:	
Company:	SILVER CREEK	Date Signed:	10/16/14
Address:	- -	License:	655229
City/State/Zip:	- -	Phone:	- -

Lydia Barron

Digitally signed by Lydia Barron
DN: st=California, l=Sacramento, o=California Department of General Services, ou=Division of the State Architect, ou=www.verisign.com/repository/CPS Incorp. by Ref.,LIAB.LTD(c)99, title=Architectural Associate, cn=Lydia Barron, email=lydia.barron@dgs.ca.gov
Date: 2015.06.30 17:57:53 -07'00'

THESE DRAWINGS AND ALL MATERIAL CONTAINED HEREIN ARE THE PROPERTY OF SILVERCREEK INDUSTRIES, INC (SCI Inc) AND SHALL NOT BE REPRODUCED, COPIED OR OTHERWISE DISPOSED OF DIRECTLY OR INDIRECTLY AND SHALL NOT BE USED IN WHOLE OR IN PART TO ASSIST IN THE MAKING OF OR FOR THE PURPOSE OF FURNISHING ANY INFORMATION FOR THE MAKING OF DRAWINGS, PRINTS, APPARATUS OR PARTS THEREOF WITHOUT THE FULL KNOWLEDGE AND WRITTEN CONSENT OF SCI Inc.
ALL PATENTABLE MATERIAL CONTAINED HEREIN AND ORIGINATING WITH SCI Inc SHALL BE THE PROPERTY OF SCI Inc

SILVER CREEK INDUSTRIES, INC.
"BUILDING FOR THE NEXT GENERATION"
SILVER CREEK
2830 BARRETT AVE PERRIS, CALIFORNIA 92571
PHONE: 951-943-5393 FAX: 951-943-2211

PROJECT NAME:

24x40 STOCKPILE OFFICE BUILDING

SHEET TITLE:

ENERGY CALC'S. LTO / MCH FORMS 120' x 40' BLDG'S

LICENSED ARCHITECT — RYAN A. SHIVELY — C-33467 — REN 01-31-2017 — STATE OF CALIFORNIA

ARCHITECT OF RECORD SUBMISSION DATE
FILE #: 15-6
IDENTIFICATION STAMP DIV. OF THE STATE ARCHITECT OFFICE OF REGULATION SERVICES
03-118270
AC ___ FLS ___ SS CL
DATE NOV - 8 2017
TRACKING #: 63221-290

PROJECT SPECIFIC STATE AGENCY APPROVAL
IDENTIFICATION STAMP DIV. OF THE STATE ARCHITECT
04 116284
ACS ___ FLS ___ SS RAE
DATE MAY 18 2017

ORIGINAL PC STATE AGENCY APPROVAL
PRE-CHECK (PC) DOCUMENT CODE 2013 CBC
A SEPARATE PROJECT APPLICATION FOR CONSTRUCTION IS REQUIRED
IDENTIFICATION STAMP DIV. OF THE STATE ARCHITECT OFFICE OF REGULATION SERVICES
PC 04-114102
AC ___ FLS ___ SS RAE
DATE AUG - 4 2015

REVISIONS
1
2
3
4
5
6
7
8

SILVER CREEK INDUSTRIES
24' x 40' PC - 2:12 PITCH

PROJECT NO:	
DRAWN BY:	
SCALE:	AS NOTED
DATE:	01-30-15
P.C. SHEET NUMBER	A-0.6E

STATE OF CALIFORNIA
INDOOR LIGHTING
CEC-NRCC-LTI-01-E (Revised 09/14) — CALIFORNIA ENERGY COMMISSION
CERTIFICATE OF COMPLIANCE — NRCC-LTI-01-E
Indoor Lighting — (Page 1 of 5)
Project Name: 120' x 40' SCI PC — Date Prepared: 10/15/14

Climate Zone 1-15	Conditioned Floor Area: 4800
	Unconditioned Floor Area: —

General Information

Building Type:	☒ Nonresidential	☐ High-Rise Residential	☐ Hotel/Motel
☒ Schools	☒ Relocatable Public Schools	☐ Conditioned Spaces	☐ Unconditioned Spaces
Phase of Construction:	☒ New Construction	☐ Addition	☐ Alteration
Method of Compliance:	☐ Complete Building	☒ Area Category	☐ Tailored

LIGHTING COMPLIANCE DOCUMENTS (select yes for each document included)
For detailed instructions on the use of this and all Energy Efficiency Standards compliance documents, refer to the Nonresidential Manual published by the California Energy Commission.

YES	NO	FORM	TITLE
✓		NRCC-GR-01-E	Certificate of Compliance. All Pages required on plans for all submittals.
✓		NRCC-LTI-01-E	Lighting Controls, Certificate of Compliance, and PAF Calculation. All Pages required on plans for all submittals.
	✓	NRCC-LTI-02-E	Indoor Lighting Power Allowance
	✓	NRCC-LTI-04-E	Tailored Method Worksheets
	✓	NRCC-LTI-05-E	Line Voltage Track Lighting Worksheets

Summary of Allowed Lighting Power
Conditioned and Unconditioned space lighting must not be combined for compliance

Indoor Lighting Power for Conditioned Spaces		Watts		Indoor Lighting Power for Unconditioned Spaces	Watts	
1.	Installed Lighting NRCC-LTI-01-E, page 4	3720	+	Installed Lighting NRCC-LTI-01-E, page 4		+
2.	PORTABLE ONLY FOR OFFICES NRCC-LTI-01-E, page 3	—	+			
3.	Minus Lighting Control Credits NRCC-LTI-02-E, page 2	930	-	Minus Lighting Control Credits NRCC-LTI-02-E, page 2		-
4.	Adjusted Installed Lighting Power (row 1 plus row 2 minus row 3)	2790	=	Adjusted Installed Lighting Power (row 1 minus row 3)		=

CA Building Energy Efficiency Standards - 2013 Nonresidential Compliance — June 2014

STATE OF CALIFORNIA
INDOOR LIGHTING
CEC-NRCC-LTI-01-E (Revised 09/14) — CALIFORNIA ENERGY COMMISSION
CERTIFICATE OF COMPLIANCE — NRCC-LTI-01-E
Indoor Lighting — (Page 2 of 5)
Project Name: — Date Prepared:

5.	Complies ONLY if Installed ≤ Allowed		Complies ONLY if Installed ≤ Allowed	
6.	Allowed Lighting Power Conditioned NRCC-LTI-03-E, page 1	5700	Allowed Lighting Power Unconditioned NRCC-LTI-03-E, page 1	

Declaration of Required Installation Certificates – Declare by selecting yes for all Installation Certificates that will be submitted. (Retain copies and verify forms are completed and signed.)

YES	NO	Form/Title	
✓		NRCI-LTI-01-E - Must be submitted for all buildings	☐ Field Inspector
✓		NRCI-LTI-02-E - Must be submitted for a lighting control system, or for an Energy Management Control System (EMCS), to be recognized for compliance.	☐ Field Inspector
	✓	NRCI-LTI-03-E - Must be submitted for a line-voltage track lighting integral current limiter, or for a supplementary overcurrent protection panel used to energize only line-voltage track lighting, to be recognized for compliance.	☐ Field Inspector
	✓	NRCI-LTI-04-E - Must be submitted for two interlocked systems serving an auditorium, a convention center, a conference room, a multipurpose room, or a theater to be recognized for compliance.	☐ Field Inspector
✓		NRCI-LTI-05-E - Must be submitted for a Power Adjustment Factor (PAF) to be recognized for compliance.	☐ Field Inspector
	✓	NRCI-LTI-06-E - Must be submitted for additional wattage installed in a video conferencing studio to be recognized for compliance.	☐ Field Inspector

Declaration of Required Certificates of Acceptance – Declare by checking all of the Certificates of Acceptance that will be submitted. (Retain copies and verify forms are completed and signed.)

YES	NO	Form/Title	
✓		NRCA-LTI-02-A - Must be submitted for occupancy sensors and automatic time switch controls.	☐ Field Inspector
✓		NRCA-LTI-03-A - Must be submitted for automatic daylight controls.	☐ Field Inspector
	✓	NRCA-LTI-04-A - Must be submitted for demand responsive lighting controls.	☐ Field Inspector

CA Building Energy Efficiency Standards - 2013 Nonresidential Compliance — June 2014

STATE OF CALIFORNIA
INDOOR LIGHTING
CEC-NRCC-LTI-01-E (Revised 09/14) — CALIFORNIA ENERGY COMMISSION
CERTIFICATE OF COMPLIANCE — NRCC-LTI-01-E
Indoor Lighting — (Page 3 of 5)
Project Name: — Date Prepared:

A separate Lighting Schedule Must be Filled Out for Conditioned and Unconditioned Spaces. Installed Lighting Power listed on this Lighting Schedule is only for:
☒ CONDITIONED SPACE ☐ UNCONDITIONED SPACE

A. INDOOR LIGHTING SCHEDULE and FIELD INSPECTION ENERGY CHECKLIST
☐ The actual indoor lighting power listed on this page and on the next page includes all installed permanent and planned portable lighting systems.
☐ When Complete BuildingMethod is used for compliance, list each different type of luminaire on separate lines.
☐ When Area Category Method or Tailored Method is used for compliance, list each different type of luminaire by each different function area on separate lines
☐ Also include track lighting in schedule, and submit the track lighting compliance form (NRCC-LTI-05-E) when line-voltage track lighting is installed.

B. Installed Portable Luminaires in Offices – Exception to Section 140.6(a)
☒ This section shall be filled out ONLY for portable luminaires in offices (As defined in §100.1). All other planned portable luminaires shall be documented on next page of this compliance form.
☐ This section is used to determine if greater than 0.3 watts of portable lighting is planned for any office
☐ Fill out a separate line for each different office. Small offices that are typical (having the same general and portable lighting) may be grouped together. This allowance shall not be traded between offices having different lighting systems.

Office Portable Luminaire Schedule	Office Installed Portable Luminaire Watts Per Square Foot							Office Location	Field Inspector	
A	B	C	D	E	F	G	H	I	J	
Complete Luminaire Description (i.e., LED, under cabinet, furniture mounted direct/indirect)	Watts per Luminaire	Number of Luminaires	Installed portable luminaire watts in this office (B x C)	Square feet of this office	Watts per square foot (D / E)	If F > 0.3, enter certif. If F ≤ 0.3, (F-0.3)	E x G	Identify Office area in which these portable luminaires are installed	Pass	Fail
									☐	☐
									☐	☐
									☐	☐
									☐	☐
									☐	☐
Total Installed portable luminaire watts that are greater than 0.3 watts per square foot per office:								Enter sum total of all pages into NRCC-LTI-01-E; Page 1		

CA Building Energy Efficiency Standards - 2013 Nonresidential Compliance — June 2014

STATE OF CALIFORNIA
INDOOR LIGHTING
CEC-NRCC-LTI-01-E (Revised 09/14) — CALIFORNIA ENERGY COMMISSION
CERTIFICATE OF COMPLIANCE — NRCC-LTI-01-E
Indoor Lighting — (Page 4 of 5)
Project Name: — Date Prepared:

A separate Lighting Schedule Must Be Filled Out for Conditioned and Unconditioned Spaces. Installed Lighting Power listed on this Lighting Schedule is only for:
☐ CONDITIONED SPACE ☐ UNCONDITIONED SPACE

C. INDOOR LIGHTING SCHEDULE and FIELD INSPECTION ENERGY CHECKLIST

Luminaire Schedule		Installed Watts				Location	Field Inspector	
A	B	C	D	E	F	G	H	
Luminaire Schedule Number	Complete Luminaire Description (i.e. 3 lamp fluorescent troffer, F32T8, one dimmable electronic ballast)	Number of Units	How wattage was determined: Manufacturer's data	Standard wattage	Installed wattage (C x D x E)	Primary Function area in which these luminaires are installed	Pass	Fail
Type	2x4 STRIP T8 (1) Diffuser Ballast	93	32	☐	40	3720 Classroom	☐	☐
			☐	☐			☐	☐
			☐	☐			☐	☐
			☐	☐			☐	☐
			☐	☐			☐	☐
			☐	☐			☐	☐
			☐	☐			☐	☐
			☐	☐			☐	☐
			☐	☐			☐	☐
	INSTALLED WATTS PAGE TOTAL:				3720	Enter sum total of all pages into NRCC-LTI-01-E; Page 2		

CA Building Energy Efficiency Standards - 2013 Nonresidential Compliance — June 2014

STATE OF CALIFORNIA
INDOOR LIGHTING
CEC-NRCC-LTI-01-E (Revised 09/14) — CALIFORNIA ENERGY COMMISSION
CERTIFICATE OF COMPLIANCE — NRCC-LTI-01-E
Indoor Lighting — (Page 5 of 5)
Project Name: — Date Prepared: 10/15/14

DOCUMENTATION AUTHOR'S DECLARATION STATEMENT
1. I certify that this Certificate of Compliance documentation is accurate and complete.

Documentation Author Name:	EVAN MILLTOOL	Documentation Author Signature:	
Company:	SILVER CREEK	Signature Date:	10/16/14
Address:	—	CEA/HERS Certification Identification (if applicable):	—
City/State/Zip:	—	Phone:	—

RESPONSIBLE PERSON'S DECLARATION STATEMENT
I certify the following under penalty of perjury, under the laws of the State of California:
1. The information provided on this Certificate of Compliance is true and correct.
2. I am eligible under Division 3 of the Business and Professions Code to accept responsibility for the building design or system design identified on this Certificate of Compliance (responsible designer).
3. The energy features and performance specifications, materials, components, and manufactured devices for the building design or system design identified on this Certificate of Compliance conform to the requirements of Title 24, Part 1 and Part 6 of the California Code of Regulations.
4. The building design features or system design features identified on this Certificate of Compliance are consistent with the information provided on other applicable compliance documents, worksheets, calculations, plans and specifications submitted to the enforcement agency for approval with this building permit application.
5. I will ensure that a completed signed copy of this Certificate of Compliance shall be made available with the building permit(s) issued for the building, and made available to the enforcement agency for all applicable inspections. I understand that a completed signed copy of this Certificate of Compliance is required to be included with the documentation the builder provides to the building owner at occupancy.

Responsible Designer Name:	SILVER CREEK	Responsible Designer Signature:	
Company:	SILVER CREEK	Date Signed:	10/16/14
Address:	—	License:	803269
City/State/Zip:	—	Phone:	—

CA Building Energy Efficiency Standards - 2013 Nonresidential Compliance — June 2014

STATE OF CALIFORNIA
INDOOR LIGHTING – LIGHTING CONTROLS
CEC-NRCC-LTI-02-E (Revised 09/14) — CALIFORNIA ENERGY COMMISSION
CERTIFICATE OF COMPLIANCE — NRCC-LTI-02-E
Indoor Lighting - Lighting Controls — (Page 1 of 3)
Project Name: 120' x 40' SCI PC — Date Prepared: 10/15/14

The NRCC-LTI-02-E shall be used to document all mandatory and prescriptive lighting controls that are applicable to the project.

Mandatory Lighting Control Declaration Statements (Indicate if the measure applies by checking yes or no below.)

YES	NO	Control Requirements
✓		Lighting shall be controlled by self-contained lighting control devices which are certified to the Energy Commission according to the Title 20 Appliance Efficiency Regulations in accordance with Section 110.9.
✓		Lighting shall be controlled by a lighting control a system or energy management control system in accordance with §110.9. An Installation Certificate shall be submitted in accordance with Section 130.4(b).
	✓	One or more Track Lighting Integral Current Limiters shall be installed which have been certified to the Energy Commission in accordance with §110.9 and §130.0. Additionally, an Installation Certificate shall be submitted in accordance with Section 130.4(b).
	✓	A Track Lighting Supplementary Overcurrent Protection Panel shall be installed in accordance with Section 110.9 and Section 130.0. Additionally, an Installation Certificate shall be installed in accordance with Section 130.4(b).
✓		All lighting controls and equipment shall comply with the applicable requirements in §110.9 and shall be installed in accordance with the manufacturer's instructions in accordance with Section 130.1.
✓		All luminaires shall be functionally controlled with manually switched ON and OFF lighting controls in accordance with Section 130.1(a).
	✓	General lighting shall be separately controlled from all other lighting systems in an area. Floor and wall display, window display, case display, ornamental, and special effects lighting shall each be separately controlled on circuits that are 20 amps or less. When track lighting is used, general, display, ornamental, and special effects lighting shall each be separately controlled; in accordance with Section 130.1(a)4.
✓		The general lighting of any enclosed area 100 square feet or larger, with a connected lighting load that exceeds 0.5 watts per square foot shall meet the multi-level lighting control requirements in accordance with Section 130.1(b).
✓		All installed indoor lighting shall be equipped with controls that meet the applicable Shut-OFF control requirements in Section 130.1(c).
✓		Lighting in all Daylit Zones shall be controlled in accordance with the requirements in Section 130.1(d) and daylit zones are shown on the plans.
	✓	Lighting power in buildings larger than 10,000 square feet shall be capable of being automatically reduced in response to a Demand Responsive Signal in accordance with Section 130.1(e).
✓		Before an occupancy permit is granted for a newly constructed building or area, or a new lighting system serving a building, area, or site is operated for normal use, indoor lighting controls serving the building, area, or site shall be certified as meeting the Acceptance Requirements for Code Compliance in accordance with Section 130.4(a). The controls required to meet the Acceptance Requirements include automatic daylight controls, automatic shut-OFF controls, and demand responsive controls.

CA Building Energy Efficiency Standards - 2013 Nonresidential Compliance — June 2014

STATE OF CALIFORNIA
INDOOR LIGHTING – LIGHTING CONTROLS
CEC-NRCC-LTI-02-E (Revised 09/14) — CALIFORNIA ENERGY COMMISSION
CERTIFICATE OF COMPLIANCE — NRCC-LTI-02-E
Indoor Lighting - Lighting Controls — (Page 2 of 3)
Project Name: — Date Prepared:

A separate document must be filled out for Conditioned and Unconditioned Spaces. This page is used only for the following:
☒ CONDITIONED SPACES ☐ UNCONDITIONED SPACES

MANDATORY AND PRESCRIPTIVE INDOOR LIGHTING CONTROL SCHEDULE, PAF CALCULATION, and FIELD INSPECTION CHECKLIST

Lighting Control Schedule			Standards Complying With [1] (✓ all that apply, or enter 'C' if Exempted)							PAF Credit Calculation [2]					Field Inspector	
A	B	C	D	E	F	G	H	I	J	K	L	M	N		O	
Location in Building	Type/Description of Lighting Control (i.e.: occupancy sensor, automatic time switch, dimmer, automatic daylight, etc..)	# of Units	§130.1(a)	§130.1(b)	§130.1(c)	§130.1(d)	§130.1(e)	§140.6(a)2	§140.6(b)	Version of Controlled Lighting	PAF	Control Credit (K x L x M)	# of Acceptance Tests Required		Pass	Fail
Classroom	Occ. Sensor Ceiling Mount	10	✓	✓	✓	✓		✓		3720	.25	930			☐	☐
															☐	☐
															☐	☐
															☐	☐
															☐	☐
															☐	☐
Control Credit PAGE TOTAL (Sum of Column M):																
IF MULTIPLE PAGES ARE USED, ENTER SUM TOTAL OF Control Credit for all pages HERE (Sum of all Column M):																
														Enter Control Credit total into NRCC-LTI-01-E; Page 1.		

1. §130.1(a) = Manual area controls; §130.1(b) = Multi Level; §130.1(c) = Auto Shut-Off; §130.1(d) = Mandatory Daylight; §130.1(e) = Demand Responsive; §140.6(a) = Additional lighting controls installed to earn a PAF; §140.6(b) = Prescriptive Secondary Daylit Daylight Controls.
2. Check Table 140.6-A for correct Factor. PAFs shall not be traded between conditioned and unconditioned spaces. As a condition to earn a PAF, an Installation Certificate is also required to be filled out, signed, and submitted.

CA Building Energy Efficiency Standards - 2013 Nonresidential Compliance — June 2014

STATE OF CALIFORNIA
INDOOR LIGHTING – LIGHTING CONTROLS
CEC-NRCC-LTI-02-E (Revised 09/14) — CALIFORNIA ENERGY COMMISSION
CERTIFICATE OF COMPLIANCE — NRCC-LTI-02-E
Indoor Lighting - Lighting Controls — (Page 3 of 3)
Project Name: — Date Prepared: 10/15/14

DOCUMENTATION AUTHOR'S DECLARATION STATEMENT
1. I certify that this Certificate of Compliance documentation is accurate and complete.

Documentation Author Name:	EVAN MILLTOOL	Documentation Author Signature:	
Company:	SILVER CREEK	Signature Date:	10/16/14
Address:	—	CEA/HERS Certification Identification (if applicable):	—
City/State/Zip:	—	Phone:	—

RESPONSIBLE PERSON'S DECLARATION STATEMENT
I certify the following under penalty of perjury, under the laws of the State of California:
1. The information provided on this Certificate of Compliance is true and correct.
2. I am eligible under Division 3 of the Business and Professions Code to accept responsibility for the building design or system design identified on this Certificate of Compliance (responsible designer).
3. The energy features and performance specifications, materials, components, and manufactured devices for the building design or system design identified on this Certificate of Compliance conform to the requirements of Title 24, Part 1 and Part 6 of the California Code of Regulations.
4. The building design features or system design features identified on this Certificate of Compliance are consistent with the information provided on other applicable compliance documents, worksheets, calculations, plans and specifications submitted to the enforcement agency for approval with this building permit application.
5. I will ensure that a completed signed copy of this Certificate of Compliance shall be made available with the building permit(s) issued for the building, and made available to the enforcement agency for all applicable inspections. I understand that a completed signed copy of this Certificate of Compliance is required to be included with the documentation the builder provides to the building owner at occupancy.

Responsible Designer Name:	SILVER CREEK	Responsible Designer Signature:	
Company:	SILVER CREEK	Date Signed:	10/16/14
Address:	—	License:	803269
City/State/Zip:	—	Phone:	—

CA Building Energy Efficiency Standards - 2013 Nonresidential Compliance — June 2014

Lydia Barron

Digitally signed by Lydia Barron
DN: c=California, l=Sacramento, o=California Department of General Services, ou=Division of the State Architect, ou=www.verisign.com/repository/CPS Incorp. by Ref.,LIABILITY LTD.(c)99, title=Architectural Associate, cn=Lydia Barron, email=lydia.barron@dgs.ca.gov
Date: 2015.05.30 17:39:51 -07'00'

THESE DRAWINGS AND ALL MATERIAL CONTAINED HEREIN ARE THE PROPERTY OF SILVERCREEK INDUSTRIES, INC (SCI Inc) AND SHALL NOT BE REPRODUCED, COPIED OR OTHERWISE DISPOSED OF DIRECTLY OR INDIRECTLY AND SHALL NOT BE USED IN WHOLE OR IN PART TO ASSIST IN THE MAKING OF OR FOR THE PURPOSE OF FURNISHING ANY INFORMATION FOR THE MAKING OF DRAWINGS, PRINTS, APPARATUS OR PARTS THEREOF WITHOUT THE FULL KNOWLEDGE AND WRITTEN CONSENT OF SCI Inc.
ALL PATENTABLE MATERIAL CONTAINED HEREIN AND ORIGINATING WITH SCI Inc SHALL BE THE PROPERTY OF SCI Inc

SILVER CREEK INDUSTRIES, INC.
"BUILDING FOR THE NEXT GENERATION"
SILVER CREEK
2830 BARRETT AVE PERRIS, CALIFORNIA 92571
PHONE: 951-943-5393 FAX: 951-943-2211

PROJECT NAME:
24x40 STOCKPILE OFFICE BUILDING

SHEET TITLE:
ENERGY CALC'S. LTI FORMS 120' x 40' BLDG'S

LICENSED ARCHITECT — JOHN E. SILVERCREEK — C-33467 — REN 01-31-2017 — STATE OF CALIFORNIA

ARCHITECT OF RECORD SUBMISSION DATE
FILE # 15-5
IDENTIFICATION STAMP DIV. OF THE STATE ARCHITECT OFFICE OF REGULATION SERVICES
03-118270
AC ___ FLS ___ SS CL
DATE 10/07/03
TRACKING # 2017-290

PROJECT SPECIFIC STATE AGENCY APPROVAL
IDENTIFICATION STAMP DIV. OF THE STATE ARCHITECT
04 116284
ACS ___ FLS ___ SS RAF
DATE MAY 18 2017

ORIGINAL PC STATE AGENCY APPROVAL
PRE-CHECK (PC) DOCUMENT CODE 2013 CBC
A SEPARATE PROJECT APPLICATION FOR CONSTRUCTION IS REQUIRED
IDENTIFICATION STAMP DIV. OF THE STATE ARCHITECT OFFICE OF REGULATION SERVICES
PC 04-114102
AC ___ FLS ___ SS RAF
DATE AUG - 4 2015

REVISIONS
1
2
3
4
5
6
7
8

SILVER CREEK INDUSTRIES
24' x 40' PC - 2:12 PITCH

PROJECT NO:
DRAWN BY:
SCALE: AS NOTED
DATE: 01-30-15

P.C. SHEET NUMBER
A-0.6F

24'x40' BUILDING - WOOD STUDS - WOOD FLOOR - WALL MOUNTED HEAT PUMP - ANY ROOF TYPE
SINGLE-ZONE (MINIMUM DESIGN)

ZONE #	1	2	3	4	5	6	7	8	9	10	11	12	13	14	15	16	ALL ZONES (MIN.DESIGN)
Wall (min. R value)	13	13	13	13	13	13	13	13	13	13	13	13	13	13	13	13	1 - 16
Floor (min. R value)	19	19	19	19	19	19	19	19	19	19	19	19	19	19	30	30	13
Roof (min. R value)	30	30	30	30	30	30	30	30	30	30	30	30	30	30	30	30	30
HVAC																	30
Max. Tonnage	5	5	5	5	5	5	5	5	5	5	5	5	5	5	5	5	5**
Min. EER	9	9	9	9	9	9	9	9	9	9	9	9	9	9	9	9	9**
Occupancy Sensor	YES	YES	YES	YES	YES	YES	YES	YES	YES	YES	YES	YES	YES	YES	YES	YES	YES
DCV	YES	YES	YES	YES	YES	YES	YES	YES	YES	YES	YES	YES	YES	YES	YES	YES	YES

120'x40' BUILDING - WOOD STUDS - WOOD FLOOR - WALL MOUNTED HEAT PUMP - ANY ROOF TYPE
SINGLE-ZONE (MINIMUM DESIGN)

ZONE #	1	2	3	4	5	6	7	8	9	10	11	12	13	14	15	16	ALL ZONES (MIN.DESIGN)
Wall (min. R value)	13	13	13	13	13	13	13	13	13	13	13	13	13	13	13	13	1 - 16
Floor (min. R value)	19	19	19	19	19	19	19	19	19	19	19	19	19	19	19	19	13
Roof (min. R value)	30	30	30	30	30	30	30	30	30	30	30	30	30	30	30	30	19
HVAC																	30
Max. Tonnage	5	5	5	5	5	5	5	5	5	5	5	5	5	5	5	5	5**
Min. EER	9	9	9	9	9	9	9	9	9	9	9	9	9	9	9	9	9**
Occupancy Sensor	YES	YES	YES	YES	YES	YES	YES	YES	YES	YES	YES	YES	YES	YES	YES	YES	YES
DCV	YES	YES	YES	YES	YES	YES	YES	YES	YES	YES	YES	YES	YES	YES	YES	YES	YES

LEGEND
Occupancy Sensor: Ceiling mounted occupancy sensor with dimming controls. Automatic on for low level lighting only, full by manual activation.
DCV: Demand Control Ventilation

NOTE
Buildings utilizing exterior wall constucted of steel stud framing shall have Min. R4 Continuous Rigid Insulation (EPS or EPX material) on interior side of wall.
Windows shall be IWC 6200 horizontal slider (SB 60 / Clr) or equal (Min), U-Factor - .510 (Max), SHGC = .350 (Max), Visual Transmittance = 0.500 (Min)
Doors shall be hollow metal, uninsulated single layer doors (Min), U-Factor = 0.500 (Max)

24'x40' BUILDING - WOOD STUDS - WOOD FLOOR - ROOF MOUNTED HEAT PUMP - ANY ROOF TYPE
SINGLE-ZONE (MINIMUM DESIGN)

ZONE #	1	2	3	4	5	6	7	8	9	10	11	12	13	14	15	16	ALL ZONES (MIN.DESIGN)
Wall (min. R value)	13	13	13	13	13	13	13	13	13	13	13	13	13	13	13	13	1 - 16
Floor (min. R value)	19	19	19	19	19	19	19	19	19	19	19	19	19	19	19	19	13
Roof (min. R value)	30	30	30	30	30	30	30	30	30	30	30	30	30	30	30	30	19
HVAC																	30
Max. Tonnage	5	5	5	5	5	5	5	5	5	5	5	5	5	5	5	5	5**
Min. Seer	14	14	14	14	14	14	14	14	14	14	14	14	14	14	14	14	14**
Occupancy Sensor	YES	YES	YES	YES	YES	YES	YES	YES	YES	YES	YES	YES	YES	YES	YES	YES	YES
DCV	YES	YES	YES	YES	YES	YES	YES	YES	YES	YES	YES	YES	YES	YES	YES	YES	YES

120'x40' BUILDING - WOOD STUDS - WOOD FLOOR - ROOF MOUNTED HEAT PUMP - ANY ROOF TYPE
SINGLE-ZONE (MINIMUM DESIGN)

ZONE #	1	2	3	4	5	6	7	8	9	10	11	12	13	14	15	16	ALL ZONES (MIN.DESIGN)
Wall (min. R value)	13	13	13	13	13	13	13	13	13	13	13	13	13	13	13	13	1 - 16
Floor (min. R value)	19	19	19	19	19	19	19	19	19	19	19	19	19	19	19	19	13
Roof (min. R value)	30	30	30	30	30	30	30	30	30	30	30	30	30	30	30	30	19
HVAC																	30
Max. Tonnage	5	5	5	5	5	5	5	5	5	5	5	5	5	5	5	5	5**
Min. Seer	14	14	14	14	14	14	14	14	14	14	14	14	14	14	14	14	14**
Occupancy Sensor	YES	YES	YES	YES	YES	YES	YES	YES	YES	YES	YES	YES	YES	YES	YES	YES	YES
DCV	YES	YES	YES	YES	YES	YES	YES	YES	YES	YES	YES	YES	YES	YES	YES	YES	YES

LEGEND
Occupancy Sensor: Ceiling mounted occupancy sensor with dimming controls. Automatic on for low level lighting only, full by manual activation.
DCV: Demand Control Ventilation

NOTE
Buildings utilizing exterior wall constucted of steel stud framing shall have Min. R4 Continuous Rigid Insulation (EPS or EPX material) on interior side of wall.
Windows shall be IWC 6200 horizontal slider (SB 60 / Clr) or equal (Min), U-Factor - .510 (Max), SHGC = .350 (Max), Visual Transmittance = 0.500 (Min)
Doors shall be hollow metal, uninsulated single layer doors (Min), U-Factor = 0.500 (Max)

24'x40' BUILDING - WOOD STUDS - CONCRETE FLOOR - WALL MOUNTED HEAT PUMP - ANY ROOF TYPE
SINGLE-ZONE (MINIMUM DESIGN)

ZONE #	1	2	3	4	5	6	7	8	9	10	11	12	13	14	15	16	ALL ZONES (MIN.DESIGN)
Wall (min. R value)	13	13	13	13	13	13	13	13	13	13	13	13	13	13	13	13	1 - 16
Floor (min. R value)	19	19	19	19	19	19	19	19	19	19	19	19	19	19	19	19	13
Roof (min. R value)	30	30	30	30	30	30	30	30	30	30	30	30	30	30	30	30	19
HVAC																	30
Max. Tonnage	5	5	5	5	5	5	5	5	5	5	5	5	5	5	5	5	5**
Min. EER	9	9	9	9	9	9	9	9	9	9	9	9	9	9	9	9	9**
Occupancy Sensor	YES	YES	YES	YES	YES	YES	YES	YES	YES	YES	YES	YES	YES	YES	YES	YES	YES
DCV	YES	YES	YES	YES	YES	YES	YES	YES	YES	YES	YES	YES	YES	YES	YES	YES	YES

120'x40' BUILDING - WOOD STUDS - CONCRETE FLOOR - WALL MOUNTED HEAT PUMP - ANY ROOF TYPE
SINGLE-ZONE (MINIMUM DESIGN)

ZONE #	1	2	3	4	5	6	7	8	9	10	11	12	13	14	15	16	ALL ZONES (MIN.DESIGN)
Wall (min. R value)	13	13	13	13	13	13	13	13	13	13	13	13	13	13	13	13	1 - 16
Floor (min. R value)	19	19	19	19	19	19	19	19	19	19	19	19	19	19	19	19	13
Roof (min. R value)	30	30	30	30	30	30	30	30	30	30	30	30	30	30	30	30	19
HVAC																	30
Max. Tonnage	5	5	5	5	5	5	5	5	5	5	5	5	5	5	5	5	5**
Min. EER	9	9	9	9	9	9	9	9	9	9	9	9	9	9	9	9	9**
Occupancy Sensor	YES	YES	YES	YES	YES	YES	YES	YES	YES	YES	YES	YES	YES	YES	YES	YES	YES
DCV	YES	YES	YES	YES	YES	YES	YES	YES	YES	YES	YES	YES	YES	YES	YES	YES	YES

LEGEND
Occupancy Sensor: Ceiling mounted occupancy sensor with dimming controls. Automatic on for low level lighting only, full by manual activation.
DCV: Demand Control Ventilation

NOTE
Buildings utilizing exterior wall constucted of steel stud framing shall have Min. R4 Continuous Rigid Insulation (EPS or EPX material) on interior side of wall.
Windows shall be IWC 6200 horizontal slider (SB 60 / Clr) or equal (Min), U-Factor - .510 (Max), SHGC = .350 (Max), Visual Transmittance = 0.500 (Min)
Doors shall be hollow metal, uninsulated single layer doors (Min), U-Factor = 0.500 (Max)

24'x40' BUILDING - WOOD STUDS - WOOD FLOOR - ROOF MOUNTED HEAT PUMP - ANY ROOF TYPE
SINGLE-ZONE (MINIMUM DESIGN)

ZONE #	1	2	3	4	5	6	7	8	9	10	11	12	13	14	15	16	ALL ZONES (MIN.DESIGN)
Wall (min. R value)	13	13	13	13	13	13	13	13	13	13	13	13	13	13	13	13	1 - 16
Floor (min. R value)	19	19	19	19	19	19	19	19	19	19	19	19	19	19	19	19	13
Roof (min. R value)	30	30	30	30	30	30	30	30	30	30	30	30	30	30	30	30	19
HVAC																	30
Max. Tonnage	5	5	5	5	5	5	5	5	5	5	5	5	5	5	5	5	5**
Min. Seer	14	14	14	14	14	14	14	14	14	14	14	14	14	14	14	14	14**
Occupancy Sensor	YES	YES	YES	YES	YES	YES	YES	YES	YES	YES	YES	YES	YES	YES	YES	YES	YES
DCV	YES	YES	YES	YES	YES	YES	YES	YES	YES	YES	YES	YES	YES	YES	YES	YES	YES

120'x40' BUILDING - WOOD STUDS - WOOD FLOOR - ROOF MOUNTED HEAT PUMP - ANY ROOF TYPE
SINGLE-ZONE (MINIMUM DESIGN)

ZONE #	1	2	3	4	5	6	7	8	9	10	11	12	13	14	15	16	ALL ZONES (MIN.DESIGN)
Wall (min. R value)	13	13	13	13	13	13	13	13	13	13	13	13	13	13	13	13	1 - 16
Floor (min. R value)	19	19	19	19	19	19	19	19	19	19	19	19	19	19	19	19	13
Roof (min. R value)	30	30	30	30	30	30	30	30	30	30	30	30	30	30	30	30	19
HVAC																	30
Max. Tonnage	5	5	5	5	5	5	5	5	5	5	5	5	5	5	5	5	5**
Min. Seer	14	14	14	14	14	14	14	14	14	14	14	14	14	14	14	14	14**
Occupancy Sensor	YES	YES	YES	YES	YES	YES	YES	YES	YES	YES	YES	YES	YES	YES	YES	YES	YES
DCV	YES	YES	YES	YES	YES	YES	YES	YES	YES	YES	YES	YES	YES	YES	YES	YES	YES

LEGEND
Occupancy Sensor: Ceiling mounted occupancy sensor with dimming controls. Automatic on for low level lighting only, full by manual activation.
DCV: Demand Control Ventilation

NOTE
Buildings utilizing exterior wall constucted of steel stud framing shall have Min. R4 Continuous Rigid Insulation (EPS or EPX material) on interior side of wall.
Windows shall be IWC 6200 horizontal slider (SB 60 / Clr) or equal (Min), U-Factor - .510 (Max), SHGC = .350 (Max), Visual Transmittance = 0.500 (Min)
Doors shall be hollow metal, uninsulated single layer doors (Min), U-Factor = 0.500 (Max)

DESIGN ENERGY VALUES BY ZONE | 1

CONSTRUCTION WASTE MANAGEMENT PLAN

A. DEFINITIONS
1. CONSTRUCTION AND DEMOLITION (C&D) WASTE: INCLUDES ALL NON-HAZARDOUS SOLID WASTES RESULTING FROM CONSTRUCTION, REMODELING, ALTERATIONS, REPAIR, AND DEMOLITION. INCLUDES MATERIAL THAT IS RECYCLED, REUSED, SALVAGED OR DISPOSED AS GARBAGE.
2. RECYCLING: THE PROCESS OF SORTING, CLEANING, TREATING, AND RECONSTITUTING MATERIALS FOR THE PURPOSE OF USING THE MATERIAL IN THE MANUFACTURE OF A NEW PRODUCT.
3. CO-MINGLED C&D RECYCLING: THE PROCESS OF COLLECTING MIXED RECYCLABLE MATERIALS IN ONE CONTAINER ON-SITE. THE CONTAINER IS TAKEN TO A MATERIAL RECOVERY FACILITY WHERE MATERIALS ARE SEPARATED FOR RECYCLING.

B. PERFORMANCE REQUIREMENTS
1. GENERAL: WASTE MATERIAL GENERATED DURING PROJECTS SHALL BE RECYCLED OR REUSED WHENEVER PRACTICABLE. DIVERT A MINIMUM OF 90% C&D WASTE, BY WEIGHT, FROM THE LANDFILL BY A CO-MINGLED C&D RECYCLING FACILITY.
   I. C&D WASTE MATERIALS THAT SHALL BE SALVAGED, REUSED OR RECYCLED INCLUDE, BUT ARE NOT LIMITED TO, THE FOLLOWING:
   CONCRETE, METALS, WINDOW GLASS, WOOD, GYPSUM BOARD, CARPETING AND PAD, CEILING TILES

C. QUALITY ASSURANCE
1. PRECONSTRUCTION CONFERENCE: REVIEW METHODS AND PROCEDURES RELATED TO WASTE MANAGEMENT INCLUDING, BUT NOT LIMITED TO, THE FOLLOWING:
   I. REVIEW AND DISCUSS WASTE MANAGEMENT PLAN INCLUDING RESPONSIBILITIES OF WASTE MANAGEMENT COORDINATOR.
   II. REVIEW REQUIREMENTS FOR DOCUMENTING QUANTITIES OF EACH TYPE OF MATERIALS THAT WILL BE SALVAGED, RECYCLED OR DISPOSED OF AS WASTE.
   III. REVIEW PROCEDURES FOR PERIODIC WASTE COLLECTION AND TRANSPORTATION TO RECYCLING AND DISPOSAL FACILITIES.
   IV. REVIEW WASTE MANAGEMENT REQUIREMENTS FOR EACH TRADE.

D. WASTE MANAGEMENT PLAN
1. INDENTIFY AND CONTRACT WITH A WASTE MANAGEMENT SERVICES PROVIDER OR ASSIGN RESPONSIBILITY TO INHOUSE WASTE MANAGEMENT PROJECT ADMINISTRATOR
2. RESPONSIBLE PARTY SHALL DEVELOP AND PROVIDE A PLAN WHICH INCLUDES THE FOLLOWING INFORMATION:
   I. TYPES OF C&D WASTE EXPECTED TO BE GENERATED DURING DEMOLITION AND CONSTRUCTION.
   II. PROPOSED METHODS FOR C&D WASTE SALVAGE, REUSE, RECYCLING AND DISPOSAL.
   III. PROPOSED METHODS FOR SALVAGE, REUSE, RECYCLING AND DISPOSAL DURING CONSTRUCTION INCLUDING, BUT NOT LIMITED TO, ONE OR MORE OF THE FOLLOWING:
   A. REQUIRING SUBCONTRACTORS TO TAKE THEIR C&D WASTE TO A RECYCLING FACILITY,
   B. CONTRACTING WITH A RECYCLING HAULER TO HAUL RECYCLABLE C&D WASTE TO AN APPROVED RECYCLING OR MATERIAL RECOVERY FACILITY,
   C. PROCESSING AND REUSING MATERIALS ON-SITE

E. WASTE MANAGEMENT REPORT
1. WASTE MANAGEMENT SERVICES PROVIDER OR ADMINISTRATOR SHALL SUBMIT A CUMULATIVE WASTE MANAGEMENT REPORT ON A REGULAR BASIS WHICH INCLUDES:
   I. A RECORD OF THE TYPE AND QUANTITY, BY WEIGHT, OF EACH MATERIAL SALVAGED, REUSED, RECYCLED OR DISPOSED.
   II. TOTAL QUANTITY OF WASTE RECYCLED AS A PERCENTAGE OF TOTAL WASTE.
   III. DISPOSAL RECEIPTS: COPY OF RECEIPTS ISSUED BY A DISPOSAL FACILITY FOR C&D WASTE THAT IS DISPOSED IN A LANDFILL.
   IV. RECYCLING RECEIPTS: COPY OF RECEIPTS ISSUED BY APPROVED RECYCLING FACILITIES FOR COMINGLED MATERIALS. INCLUDE WEIGHT TICKETS FROM THE RECYCLING HAULER OR MATERIAL RECOVERY FACILITY AND VERIFICATION OF THE RECYCLING RATE FOR CO-MINGLED LOADS AT THE FACILITY.
   V. SALVAGED MATERIALS DOCUMENTATION: TYPES AND QUANTITIES, BY WEIGHT, FOR MATERIALS SALVAGED FOR REUSE ON SITE, SOLD OR DONATED TO A THIRD PARTY.

F. CONSTRUCTION WASTE MANAGEMENT, GENERAL REQUIREMENTS
1. USE DETAILED MATERIAL ESTIMATES TO REDUCE RISK OF UNPLANMED AND POTENTIALLY WASTEFUL CUTS.
2. TO THE GREATEST EXTENT POSSIBLE, INCLUDE IN MATERIAL PURCHASING AGREEMENTS A WASTE REDUCTION PROVISION REQUESTING THAT MATERIALS AND EQUIPMENT BE DELIVERED IN PACKAGING MADE OF RECYCLABLE MATERIAL, THAT THEY REDUCE THE AMOUNT OF PACKAGING, THAT PACKAGING BE TAKEN BACK FOR REUSE OR RECYCLING, AND TO TAKE BACK ALL UNUSED PRODUCT. INSURE THAT SUBCONTRACTORS REQUIRE THE SAME PROVISIONS IN THEIR PURCHASE AGREEMENTS.
3. CONDUCT REGULAR VISUAL INSPECTIONS OF DUMPSTERS AND RECYCLING BINS TO REMOVE CONTAMINANTS.

G. REMOVAL OF CONSTRUCTION WASTE MATERIALS, GENERAL REQUIREMENTS
1. REMOVE C&D WASTE MATERIALS FROM PROJECT SITE ON A REGULAR BASIS. DO NOT ALLOW C&D WASTE TO ACCUMULATE ON-SITE.
2. TRANSPORT C&D WASTE MATERIALS OFF PROPERTY AND LEGALLY DISPOSE OF THEM.
3. BURNING OF C&D WASTE IS NOT PERMITTED.

IEQ PLAN

A. CONSTRUCTION PHASE:
1. FILTERS
   I. ALL MECHANICAL EQUIPMENT WHICH REQUIRES A FILTER SHALL NOT BE OPERATED WITHOUT A FILTER IN PLACE.
   II. ALL FILTERS SHALL HAVE A MERV RATING OF 8 OR GREATER.
   III. A PRESSURE GAUGE SHALL BE INSTALLED AT ALL MECHANICAL EQUIPMENT REQUIRING FILTERS WHICH MEASURES THE PRESSURE DROP ACROSS THE FILTER AND WHICH IS MARKED TO INDICATE WHEN THE FILTER REQUIRES CLEANING OR REPLACEMENT
2. PROTECTION OF MATERIALS
   I. ALL BUILDING MATERIALS SHALL BE PROTECTED FROM WEATHER AND OTHER MOISTURE SOURCES WHEN RECOMMEND BY THE MANUFACTURER.
   II. ANY POROUS MATERIAL WITH VISIBLE MICROBIAL GROWTH SHALL NOT BE INSTALLED.
   III. ANY OTHER MATERIAL WITH VISIBLE MICROBIAL GROWTH SHALL BE THOROUGHLY CLEAN AND DECONTAMINATED PRIOR TO INSTALLATION.
3. PROTECTION OF INTERIOR ENVIRONMENT
   I. WHENEVER POSSIBLE ALL SANDING, CUTTING GRINDING OR OTHER ACTIVITIES WHICH WILL GENERATE AIRBORNE PARTICLES SHALL BE PERFORMED AWAY FROM THE BUILDING.
   II. WHERE AIRBORNE PARTICLE GENERATING ACTIVITIES CANNOT BE PERFORMED AWAY FROM THE BUILDING PROTECTIVE MEASURES SHALL BE TAKE TO SEAL INTERIOR AREAS TO REDUCE OR ELIMINATE PARTICLE TRANSFER.
   III. ANY TEMPORARILY UNFILLED EXTERIOR OPENINGS SHALL BE PROTECTED WITH PLASTIC SHEETING, OR OTHER BARRIER, TO PREVENT THE MOISTURE AND OTHER CONTAMINANTS FROM ENTERING THE BUILDING.
   IV. ALL WELDING SHALL BE PERFORMED PRIOR TO THE INSTALLATION OF EXTERIOR WALLS WHEREVER POSSIBLE.
4. DUCT SYSTEM CONSTRUCTION
   I. THE DUCT SYSTEMS SHALL BE CONSTRUCTED AND INSTALLED PER THE SMACNA HV AC DUCT CONSTRUCTION STANDARDS FOR METAL AND FLEXIBLE DUCTWORK.
   II. THE DUCT SYSTEMS SHALL BE CONSTRUCTED AND INSTALLED PER THE SMACNA FIBROUS GLASS DUCT CONSTRUCTION STANDARDS.
   III. THE DUCT SYSTEMS SHALL BE CONSTRUCTED AND INSTALLED NFPA 90A & NFPA 90B.
   IV. ALL OPEN DUCTS AND REGISTERS SHALL BE PROTECTED WITH PLASTIC SHEETING, OR OTHER BARRIER, UNTIL THE BUILDING HAS BEEN COMPLETELY INSTALLED AND ENCLOSED AND THE MECHANICAL SYSTEM IS READY TO BE STARTED.
   V. ALL OIL FILM SHALL BE REMOVED FROM DUCTS PRIOR TO INSTALLATION.
   VI. ALL DUST AND DIRT SHALL BE REMOVED FROM BOTH THE INTERIOR AND EXTERIOR OF ALL DUCTS PRIOR TO INSTALLATION.
5. MATERIALS INSTALLATION
   I. NATURAL OR TEMPORARY MECHANICAL VENTILATION SHALL BE PROVIDED WHEN MATERIALS WHICH EMIT VOLATILE ORGANIC COMPOUNDS (VOC) ARE INSTALLED.
   II. NATURAL OR TEMPORARY MECHANICAL VENTILATION SHALL BE CONTINUED UNTIL SUCH A TIME THAT THE VOE EMISSIONS HAVE DISSIPATED.
   III. ANY TEMPORARY VENTILATION SHALL BE EXHAUSTED TO THE EXTERIOR OF THE BUILDING.
   IV. WHEN TEMPORARY MECHANICAL VENTILATION IS USED A CONSTRUCTION FILTER SHALL BE INSTALLED WITH MERV RATING OF NOT LESS THAN 8. THE CONSTRUCTION FILTER SHALL BE REPLACED PRIOR TO OCCUPANCY.
   V. MATERIALS INSTALLATION SHALL BE SEQUENCED WHENEVER POSSIBLE TO ALLOW FOR THE INSTALLATION OF VOE EMITTING MATERIALS PRIOR TO THE INSTALLATION OF POROUS AND FIBROUS MATERIALS.
   VI. MATERIALS WHICH EMIT A SIGNIFICANT AMOUNT OF VOCS OR ODORS SHALL BE STORED IN A MANNER WHICH ALLOWS FOR OFF-GASSING, IN A DRY AND WELL VENTILATION AREA, PRIOR TO INSTALLATION.
   VII. CARPETED SURFACES SHALL BE VACUUMED PER THE CRI/GREEN LABEL VACUUM CLEANER PROGRAM REQUIREMENTS AT COMPLETION OF CONSTRUCTION AND PRIOR TO OCCUPANCY.

ACOUSTICAL CONTROL

WHEN THE PRE-CHECKED BUILDING IS SITE ADAPTED, THE BUILDINGS CONSTRUCTED PER THIS PC SHALL MEET THE REQUIREMENTS OF THE 2013 CALIFORNIA GREEN BUILDING STANDARDS CODE, CALIFORNIA CODE OF REGULATIONS, TITLE 24, PART 11, SECTION 5.507.4. WHEN THE PC BUILDING IS PLACED DIRECTLY ADJACENT TO ANOTHER PC BUILDING, THE ADJOINING WALL SECTION FOR THE INTERIOR SOUND TRANSMISSION MUST MEET THE MINIMUM REQUIREMENTS OF STC RATING OF 40 PER SECTION 507.4.3, THE ARCHITECT OF RECORD FOR THE PROJECT SITE THE PC BUILDING IS TO BE INSTALLED UPON SHALL IDENTIFY ANY ADDITIONAL NOISE TRANSMISSION MEASURES ARE REQUIRED BASED UPON THE NOISE LEVEL PRESENT AT THE PROJECT SITE. IF NECESSARY EXTERIOR WALL, ROOF AND WINDOW ASSEMBLIES MEETING THE STC AND OITC RATINGS SPECIFIED IN SECTIONS 5.507.4.1 + 5.507.4.1.1 SHALL BE UTILIZED.

LOW EMITTING MATERIALS + MOISTURE MANAGEMENT

SEALANTS AND CAULKS
ALL ADHESIVES, SEALANTS AND CAULKS APPLIED IN THE PROJECT'S INTERIOR SHALL MEET THE REQUIREMENTS OF THE 2013 CALIFORNIA GREEN BUILDING STANDARDS CODE, CALIFORNIA CODE OF REGULATIONS, TITLE 24, PART 11, SECTION 5.504.4.1. PRODUCTS IN THIS CATEGORY INCLUDE BUT ARE NOT LIMITED TO CARPET, RESILIENT AND WOOD FLOORING ADHESIVES; BASE COVE ADHESIVES; CERAMIC TILE ADHESIVES; DRYWALL AND PANEL ADHESIVES; AEROSOL ADHESIVES; ADHESIVE PRIMERS; ACOUSTICAL SEALANTS; FIRE STOP SEALANTS; HVAC DUCT SEALANTS, SEALANT PRIMERS; AND CAULKS.

PAINTS & COATINGS
ALL PAINTS AND ARCHITECTURAL COATINGS APPLIED IN THE PROJECT'S INTERIOR SHALL MEET THE REQUIREMENTS OF THE 2013 CALIFORNIA GREEN BUILDING STANDARDS CODE, CALIFORNIA CODE OF REGULATIONS, TITLE 24, PART 11, SECTION 5.504.4.3. PRODUCTS IN THIS CATEGORY INCLUDE BUT ARE NOT LIMITED TO SEALERS, STAINS, CLEAR WOOD FINISHES, FLOOR SEALERS AND COATINGS, WATERPROOFING SEALERS, PRIMERS, FLAT PAINTS AND COATINGS, NON-FLAT PAINTS AND COATINGS, AND RUST PREVENTATIVE COATINGS.

RESILIENT FLOORING SYSTEMS
ALL FLOORING SYSTEMS SHALL MEET THE REQUIREMENTS OF THE 2013 CALIFORNIA GREEN BUILDING STANDARDS CODE, CALIFORNIA CODE OF REGULATIONS, TITLE 24, PART 11, SECTION 5.504.4.6.

COMPOSITE WOOD
ALL OF THE COMPOSITE WOOD PRODUCTS INSTALLED IN THE PROJECT SHALL MEET THE REQUIREMENTS OF THE 2013 CALIFORNIA GREEN BUILDING STANDARDS CODE, CALIFORNIA CODE OF REGULATIONS, TITLE 24, PART 11, SECTION 5.504.4.5. COMPOSITE WOOD PRODUCTS IN THIS CATEGORY ARE DERINED IN THE CALIFORNIA AIR RESOURCES BOARD (CARE) AIRBORNE TOXIC CONTROL MEASURE (ATCM) TO REDUCE FORMALDEHYDE EMISSIONS FROM COMPOSITE WOOD PRODUCTS (SECTIONS 93120-93120.12, TITLE 17, CALIFORNIA CODE OF REGULATIONS. THE AFFECTED PRODUCTS INCLUDE HARDWOOD PLYWOOD, PLYWOOD WITH DECORATIVE SOFTWOOD VENEER, LAMINATED PRODUCTS WITH A COMPOSITE WOOD CORE OR PLATFORM, PARTICLEBOARD, MEDIUM DENSITY FIBERBOARD (MDF), AND FINISHED GOODS FABRICATED FROM.

CEILING & WALL SYSTEMS
ALL CEILING AND WALL SYSTEMS INSTALLED IN THE PROJECT'S INTERIOR TOTALING 90% OR MORE OF THE TOTAL AREAS OF SUCH PRODUCTS SHALL MEET THESE REQUIREMENTS. CEILING AND WALL SYSTEMS INCLUDE BUT ARE NOT LIMITED TO CEILING INSULATION INSTALLED WITHIN THE STRUCTURAL ENVELOP, WALL INSULATION, ACOUSTICAL CEILING PANELS, GYPSUM BOARD WALL PANELS, TACKABLE WALL PANELS, AND WALL COVERINGS. CERAMIC TILE AND OTHER ORGANIC-FREE METAL- OR MINERAL-BASED WALL COVERINGS ARE AVAILABLE FOR CREDIT WITHOUT ANY TESTING REQUIREMENTS. SITE APPLIED ADHESIVES AND SEALANTS AND SITE APPLIED PAINTS AND COATINGS ASSOCIATED WITH CEILING AND WALL SYSTEMS ARE TREATED UNDER OPTIONS 1 AND 2, RESPECTIVELY. CEILING AND WALL SYSTEMS SHALL BE TESTED AND EVALUATED FOR EMISSIONS OF VOCS OF CONCERN WITH RESPECT TO CHRONIC INHALATION EXPOSURES FOLLOWING THE SPECIFICATIONS OF THE CDPH STANDARD METHOD V1.1. THE SEPARATE COMPONENTS OR DISTINCT LAYERS OF THESE SYSTEMS SHALL BE MODELED TO THE STANDARD PRACTICE SCHOOL CLASSROOM USING THE CLASSROOM CEILING AREA AND/OR WALL AREA AS APPROPRIATE. FOR SYSTEMS CONSISTING OF MORE THAN ONE DISTINCT LAYER (E.G., WALLS COMPRISED OF INSULATION, WALL PANEL AND WALL COVERING), ALL LAYERS SHALL INDIVIDUALLY MEET THE REQUIREMENTS OF THE STANDARD PRACTICE.

CARPET SYSTEMS
ALL CARPET SYSTEMS SHALL MEET THE REQUIREMENTS OF THE 2013 CALIFORNIA GREEN BUILDING STANDARDS CODE, CALIFORNIA CODE OF REGULATIONS, TITLE 24, PART 11, SECTION 5.504.4.4. ALL CARPET SHALL BE PER THE CARPET AND RUG INSTITUTE'S GREEN LABEL PLUS PROGRAM OR SHALL BE LISTED IN THE CHPS HIGH PERFORMANCE PRODUCT DATABASE. ALL CARPET PAD SHALL BE PER THE CARPET AND RUG INSTITUTE GREEN LABEL PROGRAM.

PRIMARY EXTERIOR DOORS
ALL WALL AND FLOOR SURFACES WITHIN 24" OF A PRIMARY EXTERIOR DOOR SHALL BE NON-ABSORBANT. ALL PRIMARY EXTERIOR DOORS SHALL BE PROTECTED BY AN OVERHANG, AWNING OR SIMILAR ELEMENT NOT LESS THAN 48" IN DEPTH.

OUTDOOR AIR QUALITY

HVAC, REFRIGERATION AND FIRE SUPPRESSION SYSTEMS SHALL NOT CONTAIN CFCs OR HALONS.

BUILDING COMMISSIONING, BUILDINGS OVER 10,000 SF

BUILDINGS GREATER THAN 10,000 SQUARE FEET SHALL HAVE BUILDING COMMISSIONING COMPLIANCE PER TITLE 24, PART 6, SECTION 120.8 (a):

SUMMARY OF COMMISSIONING REQUIREMENTS
1. OWNERS OR OWNERS REPRESENTATIVE PROJECT REQUIREMENTS
2. BASIS OF DESIGN
3. DESIGN PHASE DESIGN REVIEW
4. COMMISSIONING MEASURES SHOWN IN THE CONSTRUCTION DOCUMENTS
5. COMMISSIONING PLAN
6. FUNCTIONAL PERFORMANCE TESTING
7. DOCUMENTATION AND TRAINING; AND
8. COMMISSIONING REPORT

CALGREEN SPECIFICATIONS | 2

THESE DRAWINGS AND ALL MATERIAL CONTAINED HEREIN ARE THE PROPERTY OF SILVERCREEK INDUSTRIES, INC (SCI Inc) AND SHALL NOT BE REPRODUCED, COPIED OR OTHERWISE DISPOSED OF DIRECTLY OR INDIRECTLY AND SHALL NOT

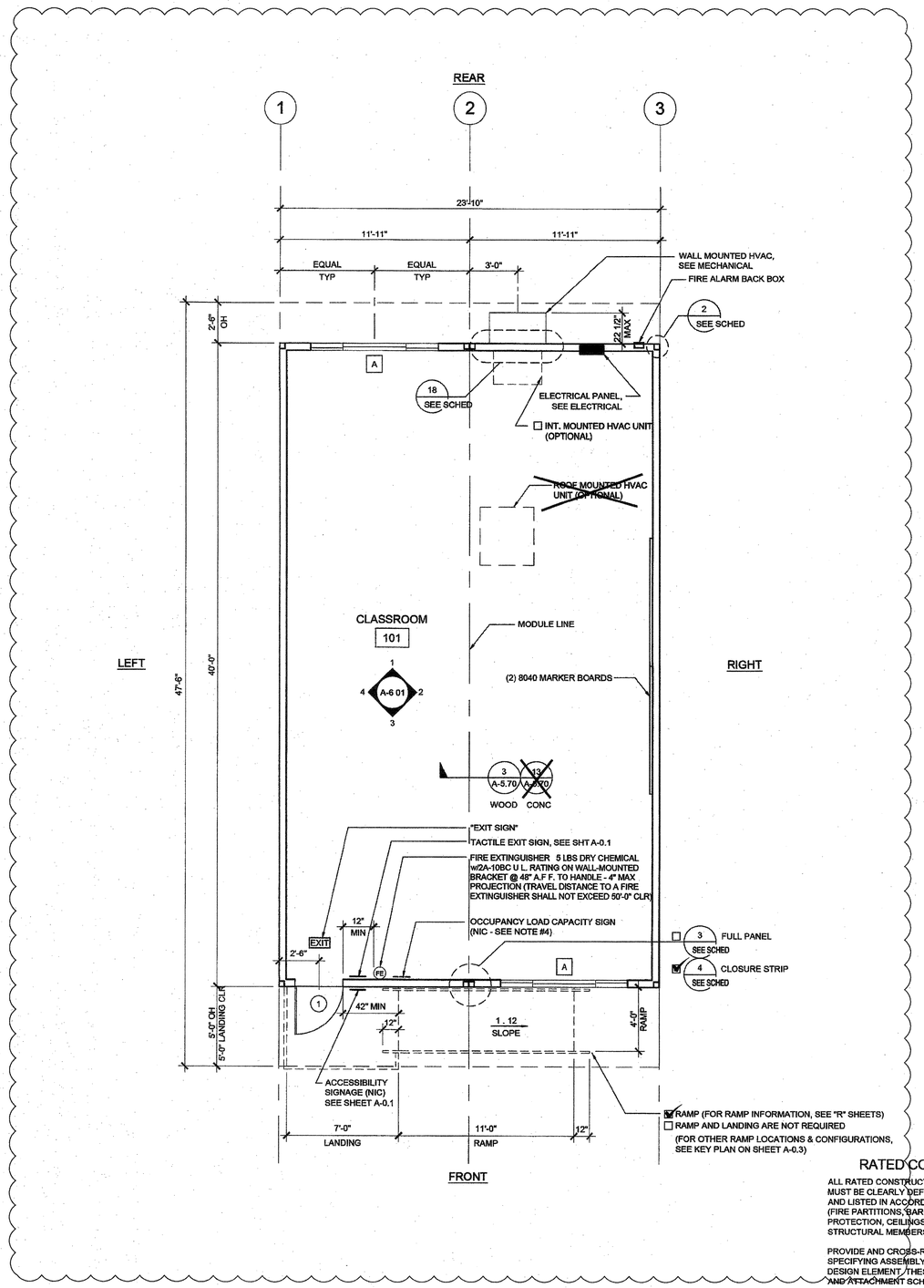

NOTES

1 PLACE (2) PERMANENT METAL IDENTIFICATION LABELS ON EACH MODULE (PER IR 16-1 13)

(1) LABEL AT REAR EXTERIOR AND (1) LABEL ABOVE CEIILNG LINE AT INTERIOR FRAME. LABELS WILL BE MECHANICALLY FASTENED AND SHOW THE DSA APPLICATION NUMBER, MANUFACTURERS NAME AND SERIAL NUMBER, DESIGN LIVE LOAD FOR ROOF AND FLOOR FRAMING, WIND SPEED, EXPOSURE CATEGORY, Kzt = 1 0, 2013 CBC, DESIGN CLIMATE ZONE, SEISMIC PARAMETER S_S

2. VINYL TACKBOARD INTERIOR FINISH SHALL COMPLY WITH CBC SECTION 803 7.

3 LOCATIONS OF DOORS AND WINDOWS MAY VARY PER JOB (IF THE NUMBER OF WINDOWS INCREASE, A NEW TITLE 24 SHALL BE SUBMITTED TO DSA)

4 POSTING OF OCCUPANCY LOAD SIGNS SHALL COMPLY WITH CBC 1004 3 & TITLE 19 C C R. (NOT IN MODULAR MANUFACTURER'S SCOPE OF WORK)

5 IF BUILDING IS TO BE RELOCATED, SEE RELOCATION SHEETS REL-101 & REL-102.

6 FOR BUILDINGS THAT ARE MANUFACTURED IN-PLANT, THE IN-PLANT INSPECTOR IS TO ATTACH A VERIFIED REPORT INSIDE EACH BUILDING, WHICH SHALL INDICATE THE MANUFACTURER'S NAME AND THE SERIAL NUMBER FOR EACH BUILDING MODULE AS WELL AS THE DSA FILE AND APPLICATION NUMBERS. PER IR-16-1 13

DETAIL SCHEDULE

FINISH:	SHEET #:
☑ SIDING OVER WOOD STUDS	A-5 50
☐ PLASTER OVER 1/2" OSB OR 1/2" CDX PLY WITH WOOD STUDS	A-5 51
☐ SIDING OVER STEEL STUDS	A-5 60
☐ PLASTER OVER 1/2" OSB OR 1/2" CDX PLY WITH STEEL STUDS	A-5 61

~~FIRE RATED DETAIL SCHEDULE~~

~~FIRE PROTECTION:~~	~~SHEET #:~~
~~☐ 1 HOUR - SIDING OVER WOOD STUDS~~	~~A-5 52~~
~~☐ 1 HOUR - PLASTER OVER 1/2" OSB OR 1/2" CDX PLY WITH WOOD STUDS~~	~~A-5.53~~
~~☐ 1 HOUR - SIDING OVER STEEL STUDS~~	~~A-5 62~~
~~☐ 1 HOUR - PLASTER OVER 1/2" OSB OR 1/2" CDX PLY WITH STEEL STUDS~~	~~A-5 63~~

WALL LEGEND

NOMINAL 4" WALL STUD ☑

NOMINAL 6" WALL STUD ☑

NOMINAL 8" WALL STUD ☐

A WINDOW PER SCHEDULE SHEET A-0 2

DOOR PER SCHEDULE SHEET A-0 2

NOTE:
IF PARAPET IS USED & HIGHER THAN 18", END WALLS MUST BE 2x6 @ 24" O C.

THIS PLAN MAY INCLUDE THE VARIOUS EXERCISABLE OPTIONS APPLICABLE TO THE PC SUCH AS PARTITION WALLS, PLUMBING, ETC FOR REFERENCE PURPOSES OPTIONS CAN BE APPLIED AS REQUIRED TO THE PC'S BUILDING SIZES

RATED CONSTRUCTION NOTES

ALL RATED CONSTRUCTION (BOTH VERTICAL AND HORIZONTAL) MUST BE CLEARLY DEFINED, CORRECTLY IDENTIFIED, DETAILED, AND LISTED IN ACCORDANCE WITH CBC CHAPTERS 3, 5, 6, 7 & 10 (FIRE PARTITIONS, BARRIERS, WALLS, SHAFTS, EGRESS PROTECTION, CEILINGS, OPENING PROTECTION, PENETRATION, STRUCTURAL MEMBERS, ETC)

PROVIDE AND CROSS-REFERENCE INSULATION DETAILS, SPECIFYING ASSEMBLY LISTING NUMBERS FOR ALL REQUIRED DESIGN ELEMENT, THESE DETAILS, INCLUDING ALL COMPONENTS AND ATTACHMENT SCHEDULE FOR FIRE-RESISTIVE MATERIALS TO THE FRAMING, SHALL CONFORM IN EVERY PARTICULAR WITH THE DESIGN NUMBER SPECIFIED

PROVIDE AND CROSS-REFERENCE CONNECTION DETAILS AT ALL WALL TERMINATIONS (HEAD, BASE AND END) DEMOSTRATING CONTINUITY PER CBC 706 5

PROVIDE AND CROSS-REFERENCE DETAILS OF ALL PENETRATIONS & OPENING PROTECTION IN RATED ASSEMBLIES

COORDINATE PENETRATION PROTECTION REQUIREMENTS WITH ALL DESIGN ELEMENTS (ELECTRICAL, MECHANICAL, PLUMBING, STRUCTURAL, FIRE ALARMS, SPRINKLERS, ETC)

THESE DRAWINGS AND ALL MATERIAL CONTAINED HEREIN ARE THE PROPERTY OF SILVERCREEK INDUSTRIES, INC (SCI Inc) AND SHALL NOT BE REPRODUCED, COPIED OR OTHERWISE DISPOSED OF DIRECTLY OR INDIRECTLY AND SHALL NOT BE USED IN WHOLE OR IN PART TO ASSIST IN THE MAKING OF OR FOR THE PURPOSE OF FURNISHING ANY INFORMATION FOR THE MAKING OF DRAWINGS, PRINTS, APPARATUS OR PARTS THEREOF WITHOUT THE FULL KNOWLEDGE AND WRITTEN CONSENT OF SCI Inc.
ALL PATENTABLE MATERIAL CONTAINED HEREIN AND ORIGINATING WITH SCI Inc SHALL BE THE PROPERTY OF SCI Inc

SILVER CREEK INDUSTRIES, INC.
"BUILDING FOR THE NEXT GENERATION"
SILVER CREEK
2830 BARRETT AVE PERRIS, CALIFORNIA 92571
PHONE. 951-943-5393 FAX: 951-943-2211

PROJECT NAME.

24x40 STOCKPILE OFFICE BUILDING

SHEET TITLE:

FLOOR PLAN
24' x 40'

LICENSED ARCHITECT JOHN F SHIVELY III C-33467 REN 01-31-2017 STATE OF CALIFORNIA

ARCHITECT OF RECORD SUBMISSION DATE

FILE #: 15-6
IDENTIFICATION STAMP DIV. OF THE STATE ARCHITECT OFFICE OF REGULATION SERVICES
03-118270
AC FLS SS
DATE NOV - 8 2017
TRACKING #: 63221-290

PROJECT SPECIFIC STATE AGENCY APPROVAL

IDENTIFICATION STAMP
DIV. OF THE STATE ARCHITECT
04 116284
ACS FLS SS RAF
DATE MAY 18 2017

ORIGINAL PC STATE AGENCY APPROVAL

PRE-CHECK PCD DOCUMENT CODE 2013 CBC
A SEPARATE PROJECT APPLICATION FOR CONSTRUCTION IS REQUIRED

IDENTIFICATION STAMP
DIV. OF THE STATE ARCHITECT
OFFICE OF REGULATION SERVICES
PC 04-114102
AC FLS SS RAF
DATE AUG - 4 2015

REVISIONS

1
2
3
4
5
6
7
8

SILVER CREEK INDUSTRIES
24' x 40' PC - 2 12 PITCH

PROJECT NO	
DRAWN BY:	
SCALE:	AS NOTED
DATE.	01-30-15

P.C. SHEET NUMBER

A-1.01

REFER TO SHEET "A-1.01N" FOR PROJECT SPECIFIC

FLOOR PLAN

SCALE 1/4" = 1' - 0" 1

NOT USED | 2

NOT USED | 3

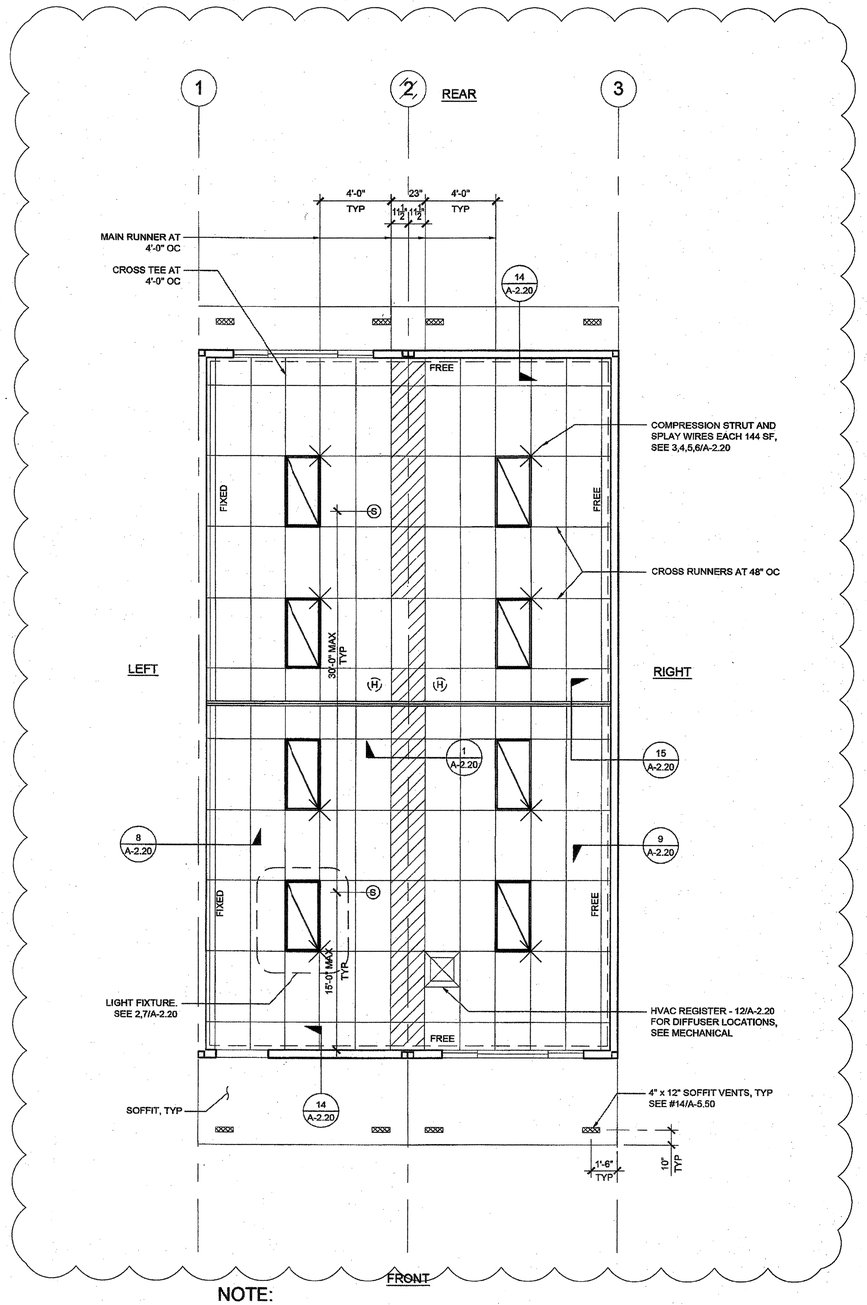

NOTE:
CEILING TO BE 8'-6" AFF (UNO)

REFLECTED CEILING PLAN | SCALE: 1/4" = 1' - 0" | 1

LEGEND

- T-BAR CEILING
- FIELD INSTALLED PANEL AT MODULE LINE
- 2' x 4' RECESSED LIGHT FIXTURE
- "OPTIONAL" 1' x 4' RECESSED LIGHT FIXTURE
- SPLAY WIRE
- CEILING MOUNTED SMOKE DETECTOR
- ATTIC MOUNTED HEAT DETECTOR
- SUPPLY AIR REGISTER
- CEILING EXHAUST FAN

NOTE:
FOR ALL REFLECTED CEILING NOTES SEE SHEET A-0.1.

PROVIDE DRAFT STOP AT AREAS EXCEEDING 3,000 sq/ft. DRAFT STOP TO BE INSTALLED AT MODLINE.

COORDINATE VAULTED CEILING OPTION W/ FIRE SPRINKLER DESIGN.

T-BAR SCHEDULE

ARMSTRONG PART NUMBERS ICC-ES ESR-1308

MAIN RUNNER: 7301
4' CROSS TEE: XL7341
2' CROSS TEE: XL7328

STANDARD 7/8" WALL ANGLE WITH BERC-2 CLIP (ICC #ESR-1308)
FOR DETAILS SEE 18, 19/A-2.20.
2" WALL ANGLE: 7810 (OPTIONAL)

THESE DRAWINGS AND ALL MATERIAL CONTAINED HEREIN ARE THE PROPERTY OF SILVERCREEK INDUSTRIES, INC (SCI Inc) AND SHALL NOT BE REPRODUCED, COPIED OR OTHERWISE DISPOSED OF DIRECTLY OR INDIRECTLY AND SHALL NOT BE USED IN WHOLE OR IN PART TO ASSIST IN THE MAKING OF OR FOR THE PURPOSE OF FURNISHING ANY INFORMATION FOR THE MAKING OF DRAWINGS, PRINTS, APPARATUS OR PARTS THEREOF WITHOUT THE FULL KNOWLEDGE AND WRITTEN CONSENT OF SCI Inc.
ALL PATENTABLE MATERIAL CONTAINED HEREIN AND ORIGINATING WITH SCI Inc SHALL BE THE PROPERTY OF SCI Inc

SILVER CREEK INDUSTRIES, INC.
"BUILDING FOR THE NEXT GENERATION"
SILVER CREEK
2830 BARRETT AVE PERRIS, CALIFORNIA 92571
PHONE: 951-943-5393 FAX: 951-943-2211

PROJECT NAME:

24x40 STOCKPILE OFFICE BUILDING

SHEET TITLE:

REFLECTED CEILING PLAN
24' x 40' - VAULTED CEILING

LICENSED ARCHITECT
DEREK SHIVELY III
C-33467
REN 01-31-2017
STATE OF CALIFORNIA

ARCHITECT OF RECORD SUBMISSION DATE

FILE #: 15-5
IDENTIFICATION STAMP
DIV. OF THE STATE ARCHITECT
OFFICE OF REGULATION SERVICES
03-118270
AC ___ FLS ___ SS OL
DATE NOV - 8 2017
TRACKING #: 63221-290

PROJECT SPECIFIC STATE AGENCY APPROVAL

IDENTIFICATION STAMP
DIV. OF THE STATE ARCHITECT
04-116284
ACS ___ FLS ___ SS RAE
DATE MAY - 8 2017

ORIGINAL PC STATE AGENCY APPROVAL

PRE-CHECK (PC) DOCUMENT
A SEPARATE REQUEST APPLICATION FOR CONSTRUCTION IS REQUIRED

IDENTIFICATION STAMP
DIV. OF THE STATE ARCHITECT
OFFICE OF REGULATION SERVICES
PC 04-114102
AC ___ FLS ___ SS RAE
DATE AUG - 4 2015

REVISIONS
1
2
3
4
5
6
7
8

SILVER CREEK INDUSTRIES
24' x 40' PC - 2:12 PITCH

PROJECT NO:	
DRAWN BY:	
SCALE:	AS NOTED
DATE:	01-30-15
P.C. SHEET NUMBER	A-2.11

REFER TO SHEET "A-2.11N" FOR PROJECT SPECIFIC

NOTE;
PROVIDE ATTIC DRAFT STOP WHEN OPEN ATTIC SPACE EXCEEDS 3,000 S.F. DRAFT STOPPING IS NOT REQUIRED WHEN FIRE SPRINKLERS ARE PROVIDED PER CBC 718.4.3.

A FULL HEIGHT WALL W/ WALL FINISH & SOLID ROOF BEAM ABOVE SHALL BE CONSIDERED AS A DRAFT STOP.

TIGHT FITTING FIBERGLASS BATTS OR MINERAL WOOL SHALL BE PROVIDED BETWEEN BTM. OF TRUSS OR ROOF BEAM AND T-GRID CEILING WHEN FULL HEIGHT WALL FRAMING IS NOT PROVIDED CBC 718.3.1.

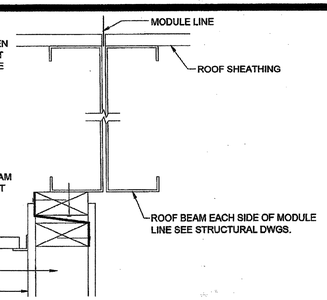

ATTIC DRAFT STOP — SCALE : N.T.S. — 16

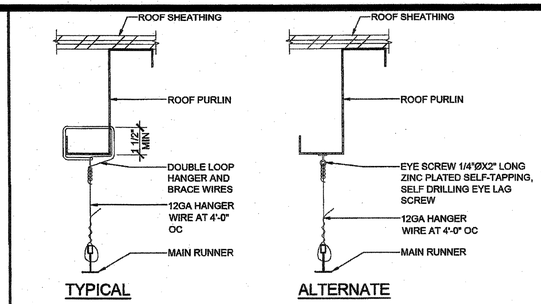

HANGER WIRE DETAIL — SCALE : 3"=1'-0" — 11

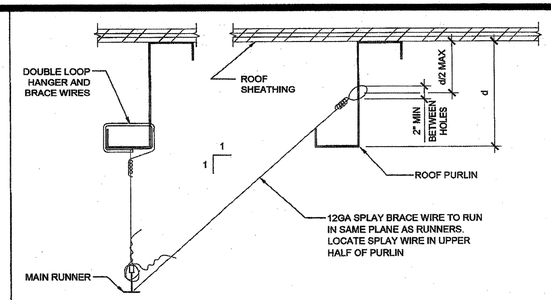

SPLAY BRACING WIRE — SCALE : 3"=1'-0" — 6

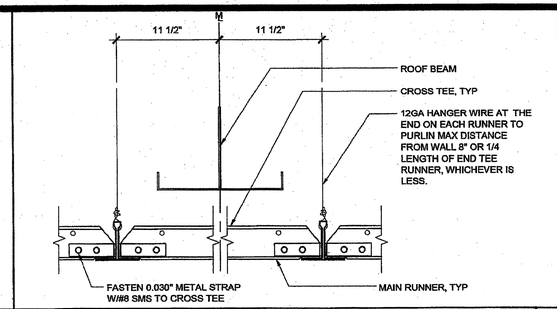

GRID AT MODLINE — SCALE : 3"=1'-0" — 1

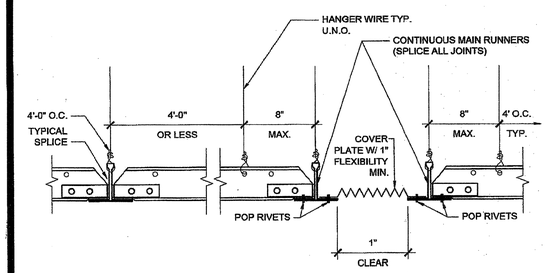

GRID SEISMIC SEPARATION JOINT — SCALE : 3"=1'-0" — 17

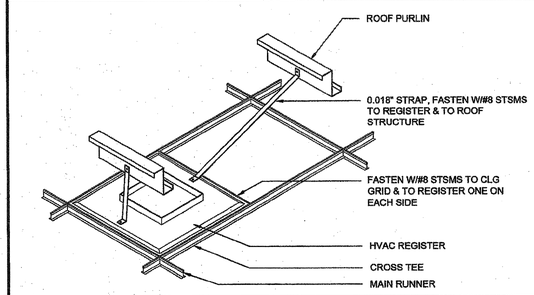

HVAC REGISTER MOUNTING — SCALE : NTS — 12

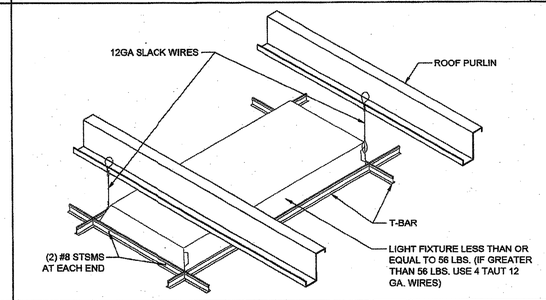

LIGHT FIXTURE MOUNTING — SCALE : NTS — 7

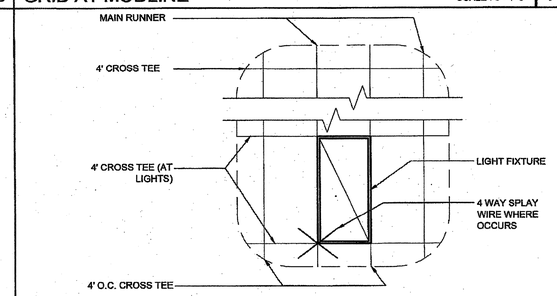

4' CROSS TEE AT LIGHTS — SCALE : 3/8"=1'-0" — 2

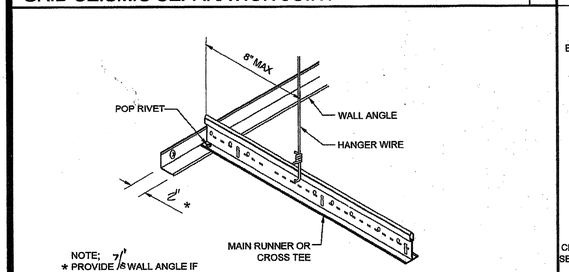

FIXED SIDE — SCALE : NTS — 18

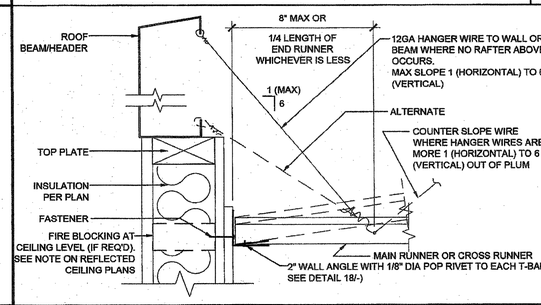

FIXED SIDE (ENDWALL) — SCALE : 3"=1'-0" — 13

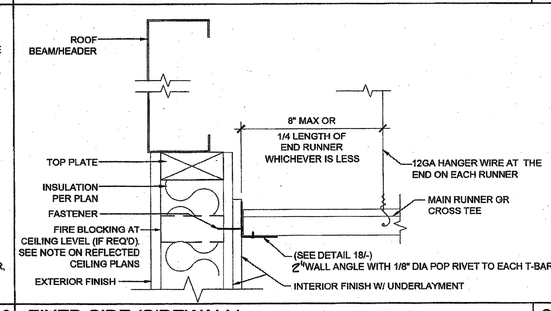

FIXED SIDE (SIDEWALL) — SCALE : 3"=1'-0" — 8

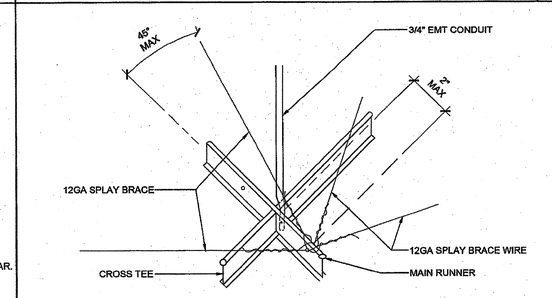

SEISMIC SPLAY - 4 WAY — SCALE : NTS — 3

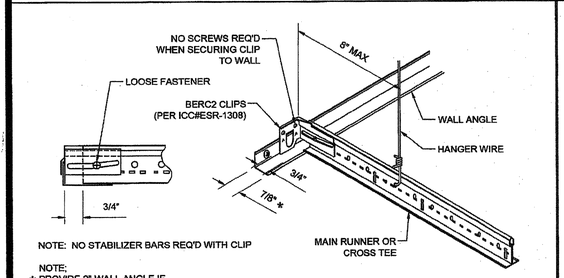

FREE SIDE — SCALE : NTS — 19

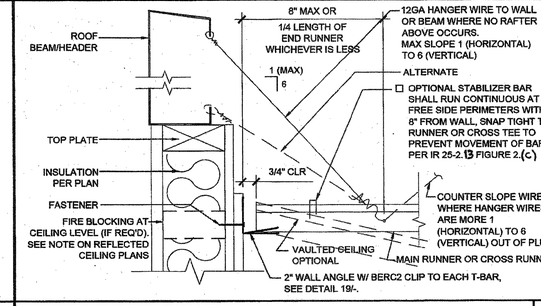

FREE SIDE (ENDWALL) — SCALE : 3"=1'-0" — 14

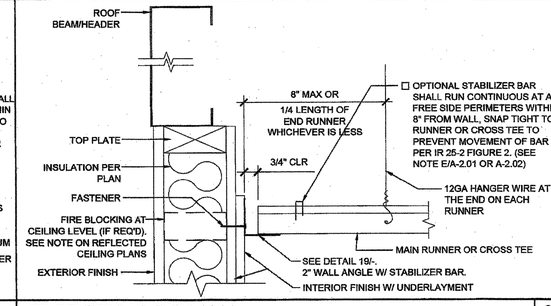

FREE SIDE (SIDEWALL) — SCALE : 3"=1'-0" — 9

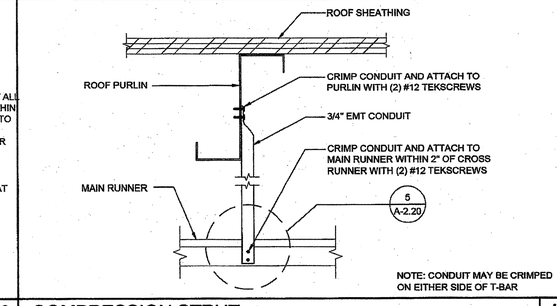

COMPRESSION STRUT — SCALE : 3"=1'-0" — 4

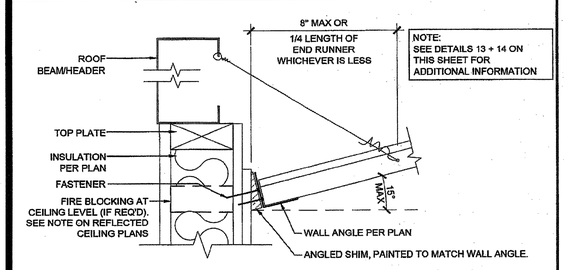

SLOPED CEILING (LOW SIDE) — SCALE : 3"=1'-0" — 20

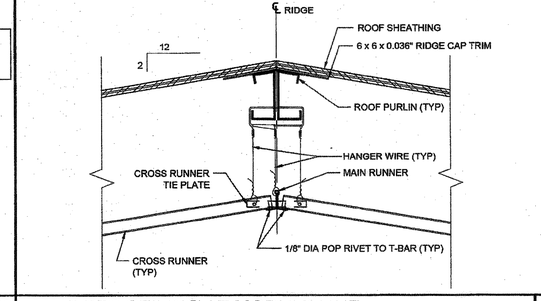

VAULTED CEILING AT MODULE LINE — SCALE : 1 1/2"=1'-0" — 15

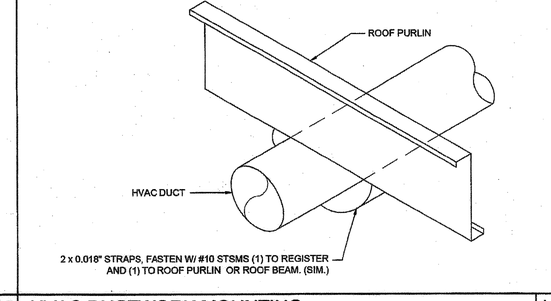

HVAC DUCTWORK MOUNTING — SCALE: NTS — 10

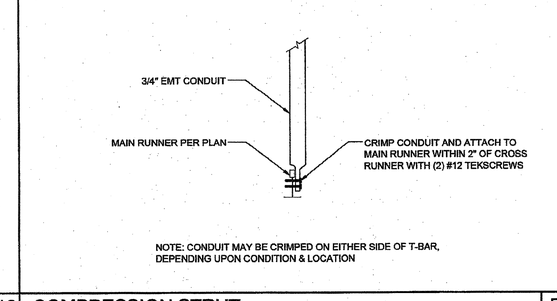

COMPRESSION STRUT — SCALE : 3"=1'-0" — 5

THESE DRAWINGS AND ALL MATERIAL CONTAINED HEREIN ARE THE PROPERTY OF SILVERCREEK INDUSTRIES, INC (SCI Inc) AND SHALL NOT BE REPRODUCED, COPIED OR OTHERWISE DISPOSED OF DIRECTLY OR INDIRECTLY AND SHALL NOT BE USED IN WHOLE OR IN PART TO ASSIST IN THE MAKING OF OR FOR THE PURPOSE OF FURNISHING ANY INFORMATION FOR THE MAKING OF DRAWINGS, PRINTS, APPARATUS OR PARTS THEREOF WITHOUT THE FULL KNOWLEDGE AND WRITTEN CONSENT OF SCI Inc.
ALL PATENTABLE MATERIAL CONTAINED HEREIN AND ORIGINATING WITH SCI Inc SHALL BE THE PROPERTY OF SCI Inc

SILVER CREEK INDUSTRIES, INC.
"BUILDING FOR THE NEXT GENERATION"
SILVER CREEK
2830 BARRETT AVE PERRIS, CALIFORNIA 92571
PHONE: 951-943-5393 FAX: 951-943-2211

PROJECT NAME:

24x40 STOCKPILE OFFICE BUILDING

SHEET TITLE:

CEILING DETAILS T GRID

LICENSED ARCHITECT JACK E. BRIVELY III C-33467 REN 01-31-2017 STATE OF CALIFORNIA

ARCHITECT OF RECORD SUBMISSION DATE

FILE #: 15-6
IDENTIFICATION STAMP DIV. OF THE STATE ARCHITECT OFFICE OF REGULATION SERVICES
03-118270
AC FLS SS
DATE NOV - 8 2017
TRACKING #: 63221-290

PROJECT SPECIFIC STATE AGENCY APPROVAL

IDENTIFICATION STAMP DIV. OF THE STATE ARCHITECT
04 116284
ACS FLS SS RAF
DATE MAY 18 2017

ORIGINAL PC STATE AGENCY APPROVAL

PRE-CHECK (PC) DOCUMENT CODE 2013 CBC
A SEPARATE PROJECT APPLICATION FOR CONSTRUCTION IS REQUIRED

IDENTIFICATION STAMP DIV. OF THE STATE ARCHITECT OFFICE OF REGULATION SERVICES
PC 04-114102
AC FLS SS RAF
DATE AUG - 4 2015

REVISIONS
1
2
3
4
5
6
7
8

SILVER CREEK INDUSTRIES
24' x 40' PC - 2:12 PITCH

PROJECT NO:	
DRAWN BY:	
SCALE:	AS NOTED
DATE:	01-30-15
P.C. SHEET NUMBER	A-2.20

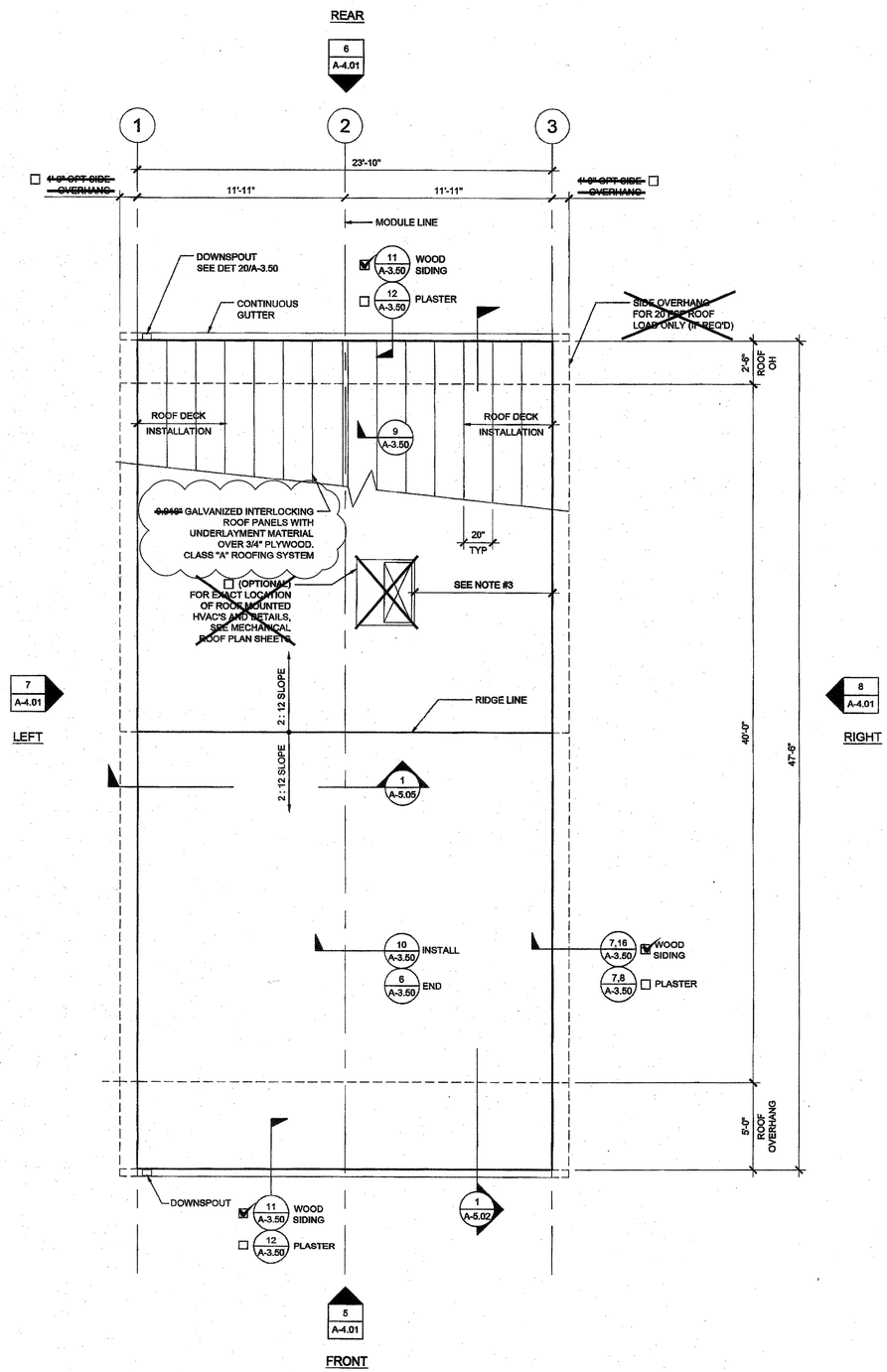

NOTES

1. GROUP E OCCUPANCIES - BUILDINGS SHALL HAVE ROOF COVERINGS AS SPECIFIED IN CBC TABLE 1505.1 - CLASS A.
2. LOCATIONS OF DRAFTSTOP AND/OR FULL HEIGHT PARTITIONS AS REQUIRED PER CBC-718.4.3 SHALL BE SHOWN ON PROJECT SPECIFIC PLANS LOCATED AT MODULE LINES.
3. ALL ROOFTOP EQUIPMENT THAT REQUIRES SERVICE & ROOF ACCESS HATCHES MUST BE A MIN. OF 10'-0" AWAY FROM ALL ROOF EDGES TO OPENING EDGES OR PROVIDE 42" MIN. GUARDRAIL OR PARAPET. See 18/S2.50
   CBC 2013 SECTIONS 1013.6 & 1013.7.
4. FOR SPECIFIC DOWNSPOUT LOCATIONS FOR VARIOUS BUILDING SIZES, SEE KEY PLANS ON SHEET A-0.3.
   LOCATE ONE (1) DOWNSPOUT FOR EVERY THREE (3) MODULES (TYP)
5. ANY BUILDING OVER 3,000 SQ/FT REQUIRES A DRAFT STOP UNLESS BUILDING IS EQUIPPED WITH FIRE SPRINKLERS.
6. WHEN PARAPETS ARE REQUIRED BECAUSE OF FIRE SEPARATION REQUIREMENTS AND/OR PROJECT SPECIFICATIONS, PROVIDE PARAPET PER CBC SECT. 705.11

THESE DRAWINGS AND ALL MATERIAL CONTAINED HEREIN ARE THE PROPERTY OF SILVERCREEK INDUSTRIES, INC (SCI Inc) AND SHALL NOT BE REPRODUCED, COPIED OR OTHERWISE DISPOSED OF DIRECTLY OR INDIRECTLY AND SHALL NOT BE USED IN WHOLE OR IN PART TO ASSIST IN THE MAKING OF OR FOR THE PURPOSE OF FURNISHING ANY INFORMATION FOR THE MAKING OF DRAWINGS, PRINTS, APPARATUS OR PARTS THEREOF WITHOUT THE FULL KNOWLEDGE AND WRITTEN CONSENT OF SCI Inc.
ALL PATENTABLE MATERIAL CONTAINED HEREIN AND ORIGINATING WITH SCI Inc SHALL BE THE PROPERTY OF SCI Inc

SILVER CREEK INDUSTRIES, INC.
"BUILDING FOR THE NEXT GENERATION"
SILVER CREEK
2830 BARRETT AVE PERRIS, CALIFORNIA 92571
PHONE: 951-943-5393 FAX: 951-943-2211

PROJECT NAME:

24x40 STOCKPILE OFFICE BUILDING

SHEET TITLE:

ROOF PLAN
24'x40' - ~~0.018"~~ METAL DECK
DUAL SLOPE

LICENSED ARCHITECT
C-33467
REN 01-31-2017
STATE OF CALIFORNIA

ARCHITECT OF RECORD SUBMISSION DATE

FILE #: 15-6
IDENTIFICATION STAMP
DIV. OF THE STATE ARCHITECT
OFFICE OF REGULATION SERVICES
03-118270
AC. FLS. SS CL
DATE NOV - 8 2017
TRACKING #: 63221-290

PROJECT SPECIFIC STATE AGENCY APPROVAL

IDENTIFICATION STAMP
DIV. OF THE STATE ARCHITECT
04 116284
ACS FLS SS RAF
DATE MAY 18 2017

ORIGINAL PC STATE AGENCY APPROVAL

PRE-CHECK (PC) DOCUMENT CODE 2013 CBC
A SEPARATE PROJECT APPLICATION FOR CONSTRUCTION IS REQUIRED

IDENTIFICATION STAMP
DIV. OF THE STATE ARCHITECT
OFFICE OF REGULATION SERVICES
PC 04-114102
AC. FLS. SS RAF
DATE AUG - 4 2015

REVISIONS
1
2
3
4
5
6
7
8

SILVER CREEK INDUSTRIES
24' x 40' PC - 2:12 PITCH

PROJECT NO:	
DRAWN BY:	
SCALE:	AS NOTED
DATE:	01-30-15

P.C. SHEET NUMBER
A-3.01

REFER TO SHEET "A-3.01N" FOR PROJECT SPECIFIC

ROOF PLAN - 0.018" METAL DECK - DUAL SLOPE

SCALE: 1/4" = 1' - 0" | 1

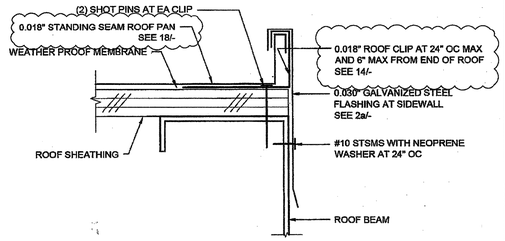

REF: A3.01, A3.02, A3.04

ROOF FLASHING AT SIDEWALL SCALE : 6"=1'-0" 16

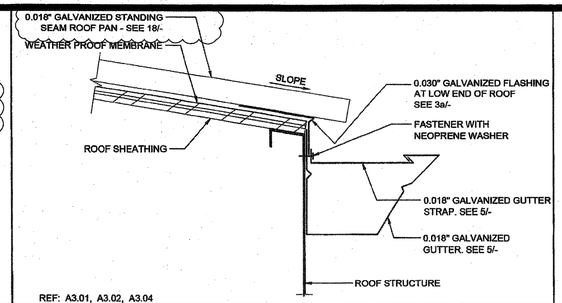

REF: A3.01, A3.02, A3.04

GUTTER AT ROOF FASCIA BEAM SCALE : 3"=1'-0" 11

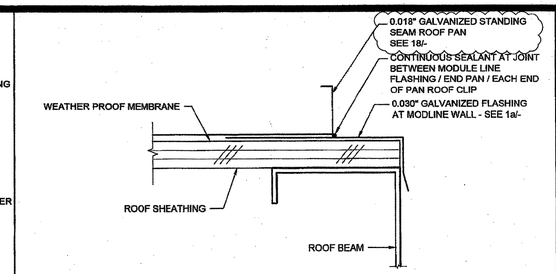

REF: A3.01, A3.02, A3.04

END ROOF PAN CONNECTION SCALE : 6"=1'-0" 6

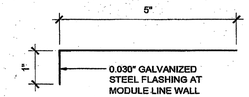

REF: A3.50

FLASHING AT MODULE LINE WALL SCALE : 6"=1'-0" 1a

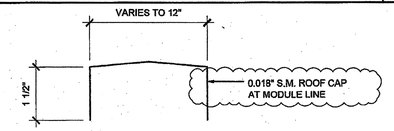

REF: A3.50

0.018" ROOF CAP AT MODULE LINE SCALE : 6"=1'-0" 1b

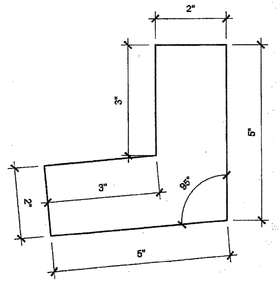

REF: A3.50

DOWNSPOUT ATTACHMENT SCALE : 6"=1'-0" 17

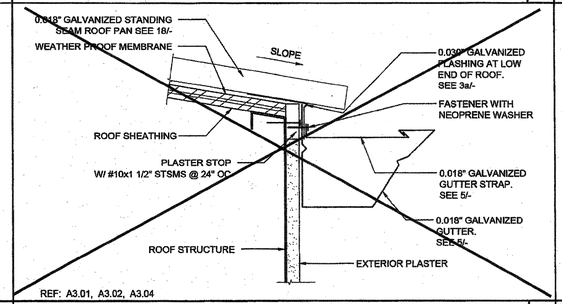

REF: A3.01, A3.02, A3.04

GUTTER AT ROOF FASCIA BEAM SCALE : 3"=1'-0" 12

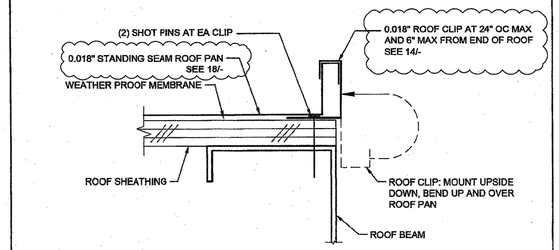

REF: A3.01, A3.02, A3.04

STARTER ROOF PAN CONNECTION SCALE : 6"=1'-0" 7

NOT USED 2b

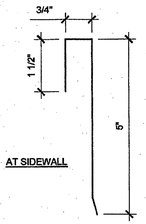

REF: A3.50

ROOF FLASHING SCALE : 6"=1'-0" 2a

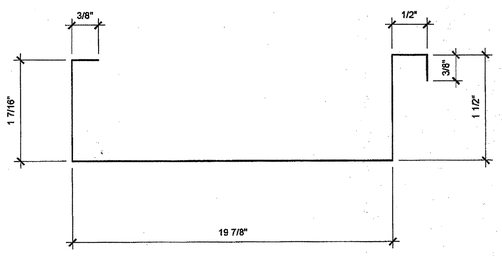

REF: A3.50

ROOF DECK PROFILE SCALE : 6"=1'-0" 18

NOT USED 13

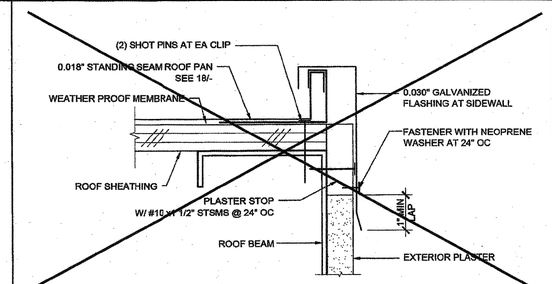

REF: A3.01, A3.02, A3.04

ROOF FLASHING AT SIDEWALL SCALE : 6"=1'-0" 8

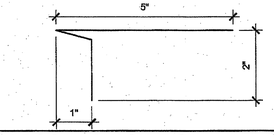

REF: A3.50

FLASHING AT ROOF LOW SIDE(S) SCALE : 6"=1'-0" 3a

NOT USED 3b

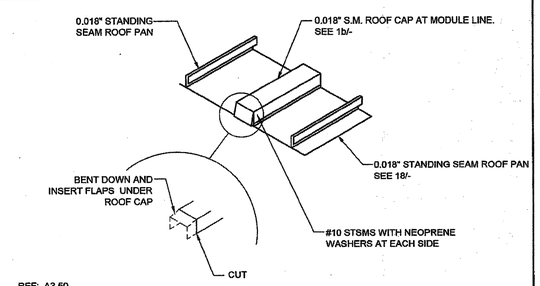

REF: A3.50

MODULE LINE ROOF CAP SCALE : NTS 19

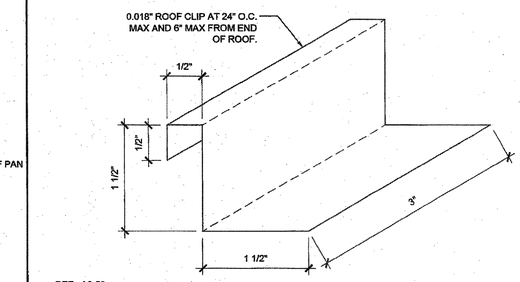

REF: A3.50

ROOF CLIP SCALE : 1'-0"=1'-0" 14

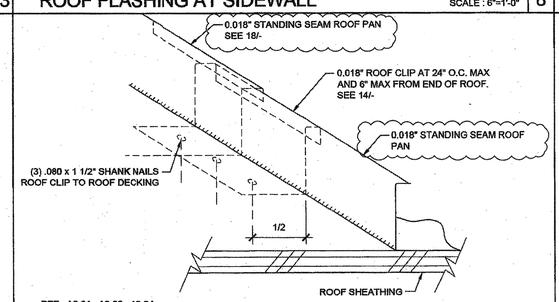

REF: A3.01, A3.02, A3.04

ROOF STANDING SEAM SCALE : NTS 9

NOT USED 4

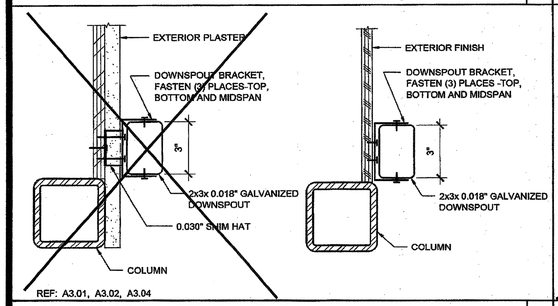

REF: A3.01, A3.02, A3.04

DOWNSPOUT ATTACHMENT SCALE : 3"=1'-0" 20

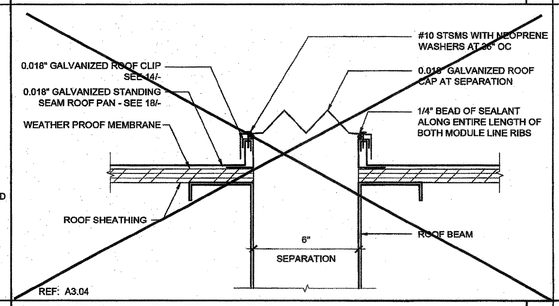

REF: A3.04

ROOF CAP AT SEPARATION SCALE : 3"=1'-0" 15

REF: A3.01, A3.02, A3.04

10

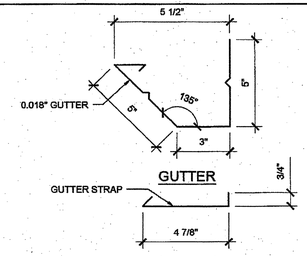

REF: A3.50

0.018" GUTTER AND GUTTER STRAP SCALE : 3"=1'-0" 5

THESE DRAWINGS AND ALL MATERIAL CONTAINED HEREIN ARE THE PROPERTY OF SILVERCREEK INDUSTRIES, INC (SCI Inc) AND SHALL NOT BE REPRODUCED, COPIED OR OTHERWISE DISPOSED OF DIRECTLY OR INDIRECTLY AND SHALL NOT BE USED IN WHOLE OR IN PART TO ASSIST IN THE MAKING OF OR FOR THE PURPOSE OF FURNISHING ANY INFORMATION FOR THE MAKING OF DRAWINGS, PRINTS, APPARATUS OR PARTS THEREOF WITHOUT THE FULL KNOWLEDGE AND WRITTEN CONSENT OF SCI Inc.
ALL PATENTABLE MATERIAL CONTAINED HEREIN AND ORIGINATING WITH SCI Inc SHALL BE THE PROPERTY OF SCI Inc

SILVER CREEK INDUSTRIES, INC.
"BUILDING FOR THE NEXT GENERATION"
SILVER CREEK
2830 BARRETT AVE PERRIS, CALIFORNIA 92571
PHONE: 951-943-5393 FAX: 951-943-2211

PROJECT NAME:

24x40 STOCKPILE OFFICE BUILDING

SHEET TITLE:

ROOF DETAILS
~~0.018"~~ STANDING SEAM ROOF DECK

LICENSED ARCHITECT
DICK F. SHIVELY III
C-33467
REN 01-31-2017
STATE OF CALIFORNIA

ARCHITECT OF RECORD SUBMISSION DATE

FILE #: 15-6
IDENTIFICATION STAMP
DIV. OF THE STATE ARCHITECT
OFFICE OF REGULATION SERVICES
03-118270
AC FLS SS
DATE NOV - 8 2017
TRACKING #: 53221-290

PROJECT SPECIFIC STATE AGENCY APPROVAL

IDENTIFICATION STAMP
DIV. OF THE STATE ARCHITECT
04 116284
ACS FLS SS
DATE MAY - 8 2017

ORIGINAL PC STATE AGENCY APPROVAL

PRE-CHECK (PC) DOCUMENT
A SEPARATE REQUEST APPLICATION FOR CONSTRUCTION IS REQUIRED

IDENTIFICATION STAMP
DIV. OF THE STATE ARCHITECT
OFFICE OF REGULATION SERVICES
PC 04-114102
AC FLS SS
DATE AUG - 4 2015

REVISIONS
1
2
3
4
5
6
7
8

SILVER CREEK INDUSTRIES
24' x 40' PC - 2:12 PITCH

PROJECT NO:	
DRAWN BY:	
SCALE:	AS NOTED
DATE:	01-30-15
P.C. SHEET NUMBER	A-3.50

REFER TO SHEET "A-3.50N" FOR PROJECT SPECIFIC

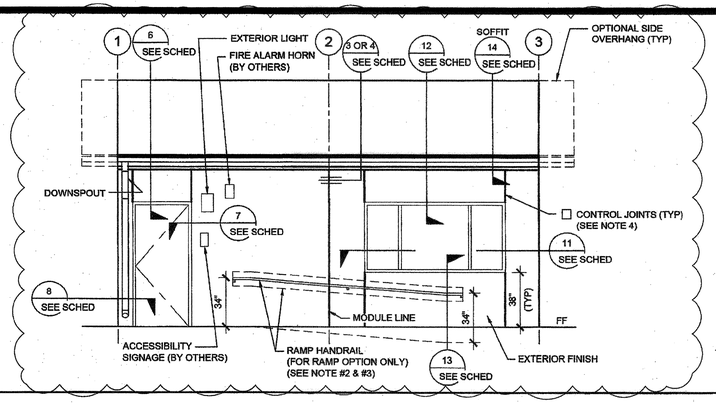

EXTERIOR ELEVATIONS - FRONT - DUAL SLOPE

SCALE: 1/4" = 1' - 0" | 1

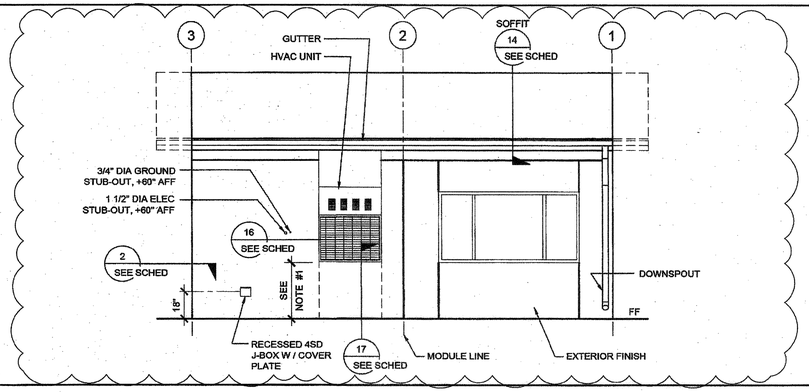

EXTERIOR ELEVATIONS - REAR - DUAL SLOPE

SCALE: 1/4" = 1' - 0" | 2

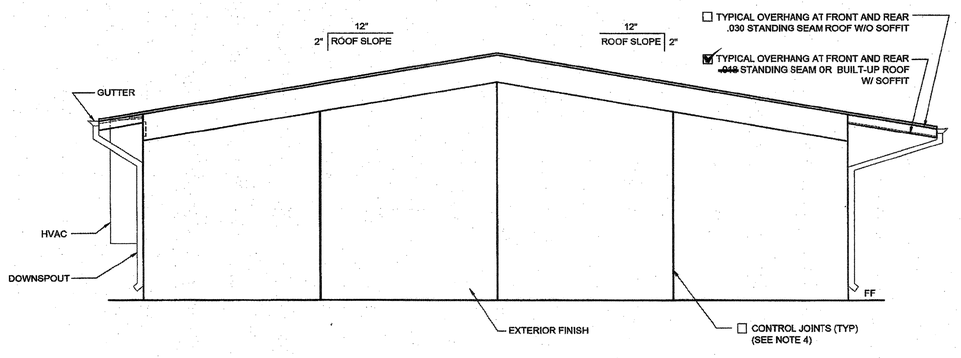

EXTERIOR ELEVATIONS - LEFT - DUAL SLOPE

SCALE: 1/4" = 1' - 0" | 3

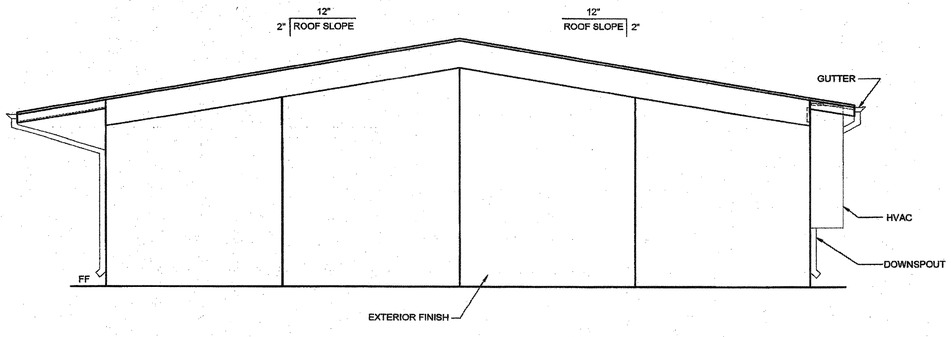

EXTERIOR ELEVATIONS - RIGHT - DUAL SLOPE

SCALE: 1/4" = 1' - 0" | 4

NOTES (EXTERIOR ELEVATION)

1. PROVIDE PROTECTION RAIL AROUND HVAC UNIT(S) IF LOCATED IN A PEDESTRIAN WAY IF THE HEIGHT FROM GRADE TO BOTTOM OF UNIT EXCEEDS 27" (NIC). REFERENCE TO DET. # 2/A5.81 FOR WOOD STUDS, # 17/A5.81 FOR STEEL STUDS
2. RAMP (WHERE OCCURS), NOT SHOWN FOR CLARITY.
3. WALL BEYOND HANDRAIL SHALL NOT HAVE ANY SHARP OR ABRASIVE SURFACE ADJACENT TO HANDRAILS. (GRIND SMOOTH ALL METAL RAILING CONNECTIONS - SMOOTH SURFACE TO EXTEND 8" ABOVE HANDRAIL)
4. FOR PLASTER ONLY, PROVIDE CONTROL JOINT AT EACH MODLINE, ON END WALLS, 10'-0" OC AT SIDE WALLS, AND / OR ABOVE AND BELOW OPENINGS. WHERE FIRE RATED WALLS ARE REQUIRED, MATERIALS AND METHODS OF CONSTRUCTION USED TO PROTECT JOINTS WILL COMPLY WITH CBC SECTION 703.2 AND 705.
5. HANDRAIL IS NOT ALLOWED AT PLASTER WALL OPTION WHERE RAMP & HANDRAIL IS AGAINST THE WALL. SEE DETAIL 1/R-1.02 FOR ALTERNATE RAMP APPLICATION.
6. EXTERIOR PROJECTIONS THAT ARE REQUIRED TO BE FIRE PROTECTED SHALL COMPLY W/ SECTION 705 AND 1406, 2013 CBC

DETAIL SCHEDULE

EXTERIOR FINISH:	SHEET #:
☑ SIDING OVER WOOD STUDS	A-5.50
☐ PLASTER OVER 1/2" OSB OR 1/2" CDX PLY WITH WOOD STUDS	A-5.51
☐ SIDING OVER STEEL STUDS	A-5.60
☐ PLASTER OVER 1/2" OSB OR 1/2" CDX PLY WITH STEEL STUDS	A-5.61

~~FIRE RATED DETAIL SCHEDULE~~

~~FIRE PROTECTION:~~	~~SHEET #:~~
~~☐ 1 HOUR - SIDING OVER WOOD STUDS~~	~~A-5.52~~
~~☐ 1 HOUR - PLASTER OVER 1/2" OSB OR 1/2" CDX PLY WITH WOOD STUDS~~	~~A-5.53~~
~~☐ 1 HOUR - SIDING OVER STEEL STUDS~~	~~A-5.62~~
~~☐ 1 HOUR - PLASTER OVER 1/2" OSB OR 1/2" CDX PLY WITH STEEL STUDS~~	~~A-5.63~~

THESE DRAWINGS AND ALL MATERIAL CONTAINED HEREIN ARE THE PROPERTY OF SILVERCREEK INDUSTRIES, INC (SCI Inc) AND SHALL NOT BE REPRODUCED, COPIED OR OTHERWISE DISPOSED OF DIRECTLY OR INDIRECTLY AND SHALL NOT BE USED IN WHOLE OR IN PART TO ASSIST IN THE MAKING OF OR FOR THE PURPOSE OF FURNISHING ANY INFORMATION FOR THE MAKING OF DRAWINGS, PRINTS, APPARATUS OR PARTS THEREOF WITHOUT THE FULL KNOWLEDGE AND WRITTEN CONSENT OF SCI Inc.
ALL PATENTABLE MATERIAL CONTAINED HEREIN AND ORIGINATING WITH SCI Inc SHALL BE THE PROPERTY OF SCI Inc

SILVER CREEK INDUSTRIES, INC.
"BUILDING FOR THE NEXT GENERATION"
SILVER CREEK
2830 BARRETT AVE PERRIS, CALIFORNIA 92571
PHONE: 951-943-5393 FAX: 951-943-2211

PROJECT NAME:

24x40 STOCKPILE OFFICE BUILDING

SHEET TITLE:

EXTERIOR ELEVATION 24' X 40' DUAL SLOPE

LICENSED ARCHITECT
JACK F. SHIVELY III
C-33467
REN 01-31-2017
STATE OF CALIFORNIA

ARCHITECT OF RECORD SUBMISSION DATE

FILE #: 15-8
IDENTIFICATION STAMP
DIV. OF THE STATE ARCHITECT
OFFICE OF REGULATION SERVICES
03-118270
AC FLS SS CL
DATE NOV - 9 2017
TRACKING #: 63221-290

PROJECT SPECIFIC STATE AGENCY APPROVAL

IDENTIFICATION STAMP
DIV. OF THE STATE ARCHITECT
04 116284
ACS FLS SS RAF
DATE MAY 18 2017

ORIGINAL PC STATE AGENCY APPROVAL

PRE-CHECK (PC) DOCUMENT
CODE: 2013 CBC
A SEPARATE PROJECT APPLICATION FOR CONSTRUCTION IS REQUIRED

IDENTIFICATION STAMP
DIV. OF THE STATE ARCHITECT
OFFICE OF REGULATION SERVICES
PC 04-114102
AC FLS SS RAF
DATE AUG - 4 2015

REVISIONS

1
2
3
4
5
6
7
8

SILVER CREEK INDUSTRIES
24' x 40' PC - 2:12 PITCH

PROJECT NO:	
DRAWN BY:	
SCALE:	AS NOTED
DATE:	01-30-15

P.C. SHEET NUMBER

A-4.01

REFER TO SHEET "A-4.01N" FOR PROJECT SPECIFIC

DETAIL SCHEDULE

FINISH:	SHEET #:
☑ SIDING OVER WOOD STUDS	A-5.50
☐ PLASTER OVER 1/2" OSB OR 1/2" CDX PLY WITH WOOD STUDS	A-5.51
☐ SIDING OVER STEEL STUDS	A-5.60
☐ PLASTER OVER 1/2" OSB OR 1/2" CDX PLY WITH STEEL STUDS	A-5.61

~~FIRE RATED DETAIL SCHEDULE~~

~~FINISH:~~	~~SHEET #:~~
~~☐ 1 HOUR - SIDING OVER WOOD STUDS~~	~~A-5.52~~
~~☐ 1 HOUR - PLASTER OVER 1/2" OSB OR 1/2" CDX PLY WITH WOOD STUDS~~	~~A-5.53~~
~~☐ 1 HOUR - SIDING OVER STEEL STUDS~~	~~A-5.62~~
~~☐ 1 HOUR - PLASTER OVER 1/2" OSB OR 1/2" CDX PLY WITH STEEL STUDS~~	~~A-5.63~~

FLOOR OPTION

- ☑ WOOD FLOOR
- ☐ CONCRETE FLOOR

NOTES

MOISTURE PROTECTION AND CAULKING:
GENERAL: FURNISH AND INSTALL ALL CAULKING AS REQUIRED TO PROVIDE A WEATHERTIGHT BUILDING.
MATERIALS: SEALANT SHALL BE AN ACRYLIC LATEX OR SILICONE CAULKING.
APPLICATIONS: AT JOINTS WHERE SHOWN, APPLY SEALANT AS FOLLOWS - JOINTS SHALL BE CLEAN, DRY, AND FREE FROM DUST, WAX, AND FOREIGN MATERIALS, SEALANT SHALL BE APPLIED WITH A GUN IN A STRICT COMPLIANCE WITH MANUFACTURER'S DIRECTIONS. COMPLETELY FILL THE JOINT AND FIRMLY TOOL AGAINST THE BACKING, MAKING A SMOOTH CONVEX BEAD.
COLOR: COLOR OF MATERIAL SHALL MATCH THAT OF ADJACENT FINISHED SURFACES.

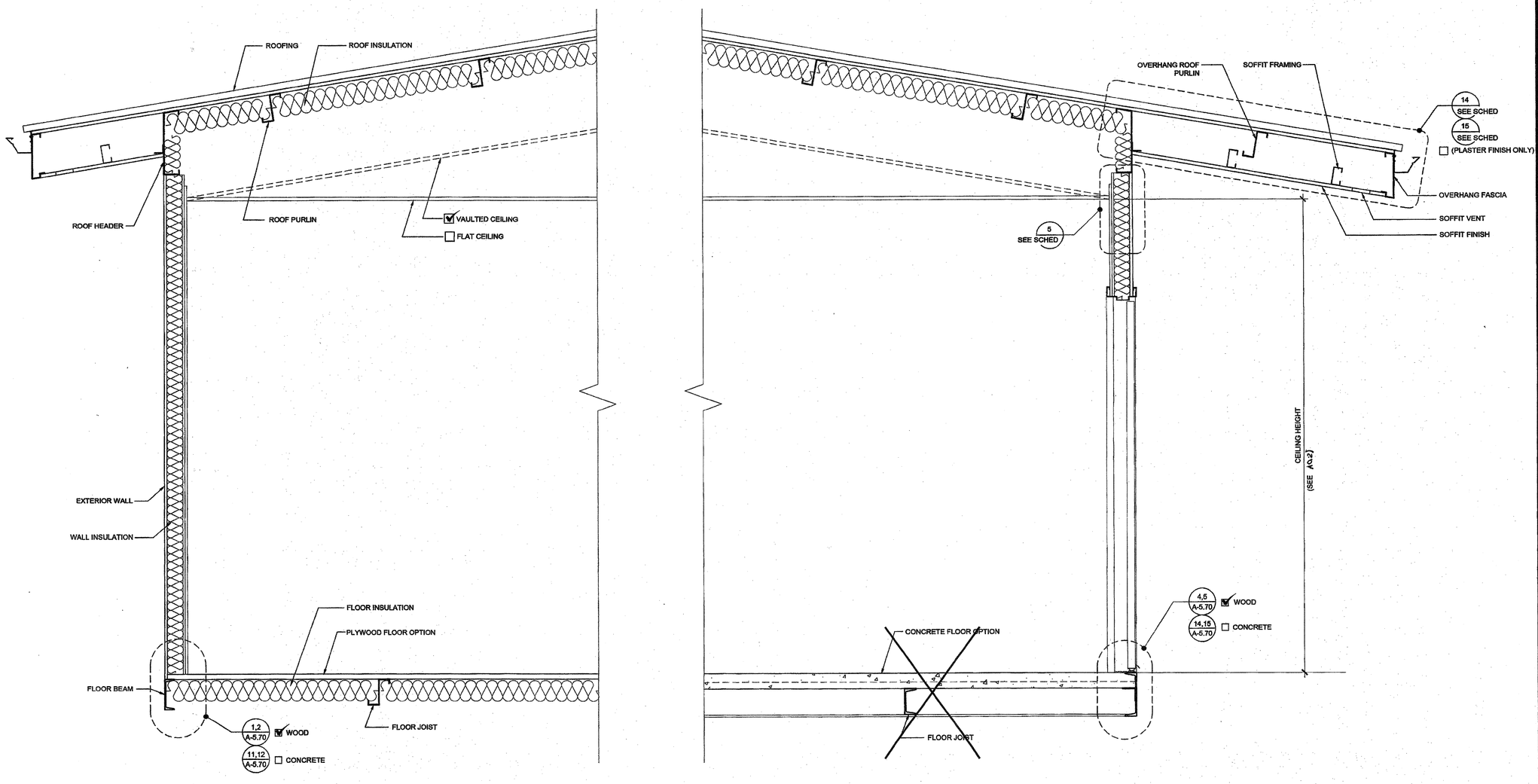

BUILDING SECTION

SCALE: 1" = 1'-0" | 1

THESE DRAWINGS AND ALL MATERIAL CONTAINED HEREIN ARE THE PROPERTY OF SILVERCREEK INDUSTRIES, INC (SCI Inc) AND SHALL NOT BE REPRODUCED, COPIED OR OTHERWISE DISPOSED OF DIRECTLY OR INDIRECTLY AND SHALL NOT BE USED IN WHOLE OR IN PART TO ASSIST IN THE MAKING OF OR FOR THE PURPOSE OF FURNISHING ANY INFORMATION FOR THE MAKING OF DRAWINGS, PRINTS, APPARATUS OR PARTS THEREOF WITHOUT THE FULL KNOWLEDGE AND WRITTEN CONSENT OF SCI Inc.
ALL PATENTABLE MATERIAL CONTAINED HEREIN AND ORIGINATING WITH SCI Inc SHALL BE THE PROPERTY OF SCI Inc

SILVER CREEK INDUSTRIES, INC.
"BUILDING FOR THE NEXT GENERATION"
SILVER CREEK
2830 BARRETT AVE PERRIS, CALIFORNIA 92571
PHONE: 951-943-5393 FAX: 951-943-2211

PROJECT NAME:

24x40 STOCKPILE OFFICE BUILDING

SHEET TITLE:

CROSS SECTION
DUAL SLOPE
~~0.018" OR BUILT UP~~ ROOF DECK

LICENSED ARCHITECT
JAMES SHUVELY III
C-33457
REN 01-31-2017
STATE OF CALIFORNIA

ARCHITECT OF RECORD SUBMISSION DATE

FILE #: 15-6
IDENTIFICATION STAMP
DIV. OF THE STATE ARCHITECT
OFFICE OF REGULATION SERVICES
03-118270
AC___ FLS___ SS CL
DATE NOV - 8 2017
TRACKING #: 63221-290

PROJECT SPECIFIC STATE AGENCY APPROVAL

IDENTIFICATION STAMP
DIV. OF THE STATE ARCHITECT
04 116284
ACS___ FLS___ SS RAF
DATE MAY 18 2017

ORIGINAL PC STATE AGENCY APPROVAL

PRE-CHECK (PC) DOCUMENT
CODE: 2013 CBC
A SEPARATE PROJECT SUBMITTAL FOR CONSTRUCTION IS REQUIRED

IDENTIFICATION STAMP
DIV. OF THE STATE ARCHITECT
OFFICE OF REGULATION SERVICES
PC 04-114102
AC___ FLS___ SS RAF
DATE AUG - 4 2015

REVISIONS

1
2
3
4
5
6
7
8

SILVER CREEK INDUSTRIES
24' x 40' PC - 2:12 PITCH

PROJECT NO:	
DRAWN BY:	
SCALE:	AS NOTED
DATE:	01-30-15

P.C. SHEET NUMBER

A-5.02

NOTES

1. MOISTURE PROTECTION AND CAULKING:
   GENERAL: FURNISH AND INSTALL ALL CAULKING AS REQUIRED TO PROVIDE A WEATHERTIGHT BUILDING.
   MATERIALS: SEALANT SHALL BE AN ACRYLIC LATEX OR SILICONE CAULKING.
   APPLICATIONS: AT JOINTS WHERE SHOWN, APPLY SEALANT AS FOLLOWS - JOINTS SHALL BE CLEAN, DRY, AND FREE FROM DUST, WAX, AND FOREIGN MATERIALS. SEALANT SHALL BE APPLIED WITH A GUN IN A STRICT COMPLIANCE WITH MANUFACTURER'S DIRECTIONS. COMPLETELY FILL THE JOINT AND FIRMLY TOOL AGAINST THE BACKING, MAKING A SMOOTH CONVEX BEAD.
   COLOR: COLOR OF MATERIAL SHALL MATCH THAT OF ADJACENT FINISHED SURFACES.

FLOOR OPTION

- [x] WOOD FLOOR
- [ ] CONCRETE FLOOR

THESE DRAWINGS AND ALL MATERIAL CONTAINED HEREIN ARE THE PROPERTY OF SILVERCREEK INDUSTRIES, INC (SCI Inc) AND SHALL NOT BE REPRODUCED, COPIED OR OTHERWISE DISPOSED OF DIRECTLY OR INDIRECTLY AND SHALL NOT BE USED IN WHOLE OR IN PART TO ASSIST IN THE MAKING OF OR FOR THE PURPOSE OF FURNISHING ANY INFORMATION FOR THE MAKING OF DRAWINGS, PRINTS, APPARATUS OR PARTS THEREOF WITHOUT THE FULL KNOWLEDGE AND WRITTEN CONSENT OF SCI Inc.
ALL PATENTABLE MATERIAL CONTAINED HEREIN AND ORIGINATING WITH SCI Inc SHALL BE THE PROPERTY OF SCI Inc

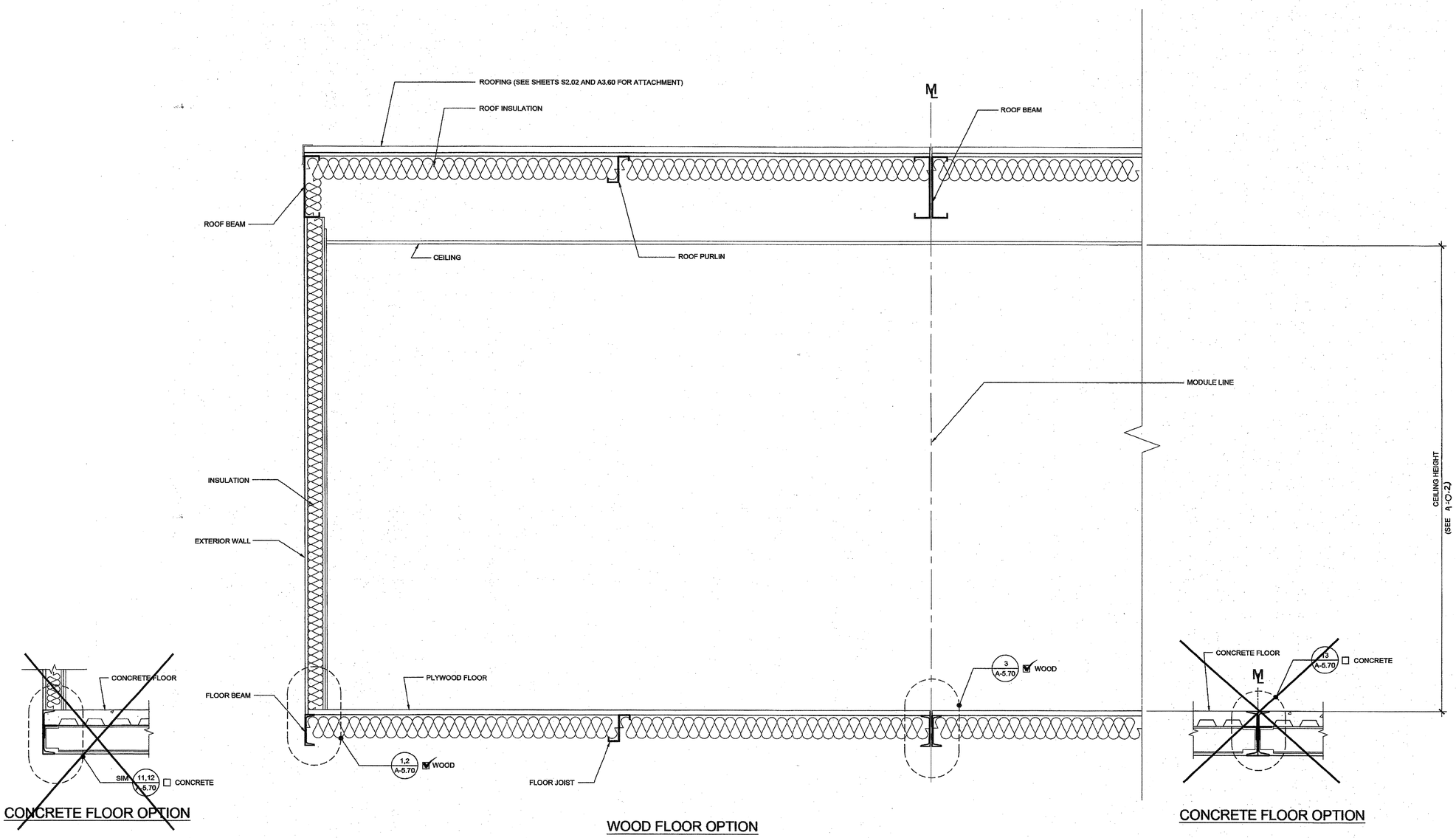

BUILDING SECTION

SCALE: 1" = 1'-0" | 1

SILVER CREEK INDUSTRIES, INC.
"BUILDING FOR THE NEXT GENERATION"
SILVER CREEK
2830 BARRETT AVE PERRIS, CALIFORNIA 92571
PHONE: 951-943-5393 FAX: 951-943-2211

PROJECT NAME:

24x40 STOCKPILE OFFICE BUILDING

SHEET TITLE:

CROSS SECTION

LICENSED ARCHITECT — JAMES SILVERCREEK III — C-33467 — REN 01-31-2017 — STATE OF CALIFORNIA

ARCHITECT OF RECORD SUBMISSION DATE

FILE #: 15-6
IDENTIFICATION STAMP
DIV. OF THE STATE ARCHITECT
OFFICE OF REGULATION SERVICES
03-118270
AC ___ FLS ___ SS CL
DATE NOV - 9 2017
TRACKING #: 63221-290

PROJECT SPECIFIC STATE AGENCY APPROVAL

IDENTIFICATION STAMP
DIV. OF THE STATE ARCHITECT
04 116284
AC ___ FLS ___ SS RAF
DATE MAY - 8 2017

ORIGINAL PC STATE AGENCY APPROVAL

PRE-CHECK (PC) DOCUMENT CODE 2013 CBC
A SEPARATE REQUEST APPLICATION FOR CONSTRUCTION IS REQUIRED

IDENTIFICATION STAMP
DIV. OF THE STATE ARCHITECT
OFFICE OF REGULATION SERVICES
PC 04-114102
AC ___ FLS ___ SS RAF
DATE AUG - 4 2015

REVISIONS

1
2
3
4
5
6
7
8

SILVER CREEK INDUSTRIES
24' x 40' PC - 2:12 PITCH

PROJECT NO:	
DRAWN BY:	
SCALE:	AS NOTED
DATE:	01-30-15

P.C. SHEET NUMBER

A-5.05

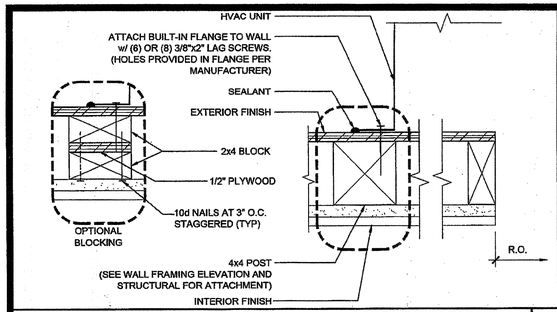

HVAC MOUNT AT JAMBS
SCALE : 3"=1'-0" | 16

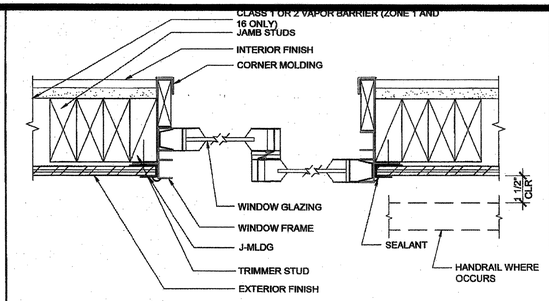

WINDOW SECTION AT JAMBS
SCALE : 3"=1'-0" | 11

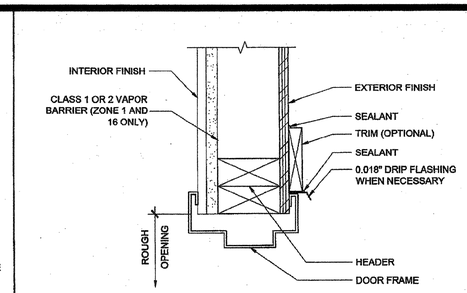

EXTERIOR DOOR HEADER
SCALE : 3"=1'-0" | 6

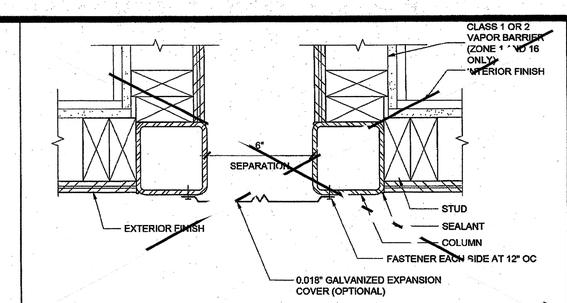

CLOSURE BETWEEN BUILDINGS
SCALE : 3"=1'-0" | 1

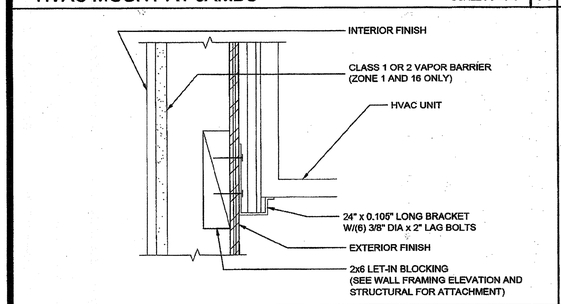

HVAC UNIT AT BOTTOM
SCALE : 3"=1'-0" | 17

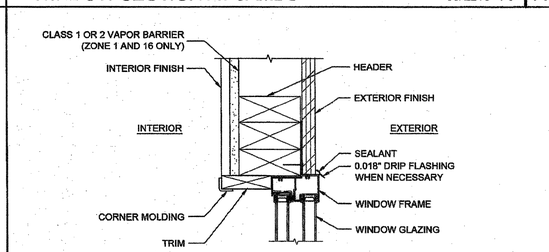

WINDOW HEADER
SCALE : 3"=1'-0" | 12

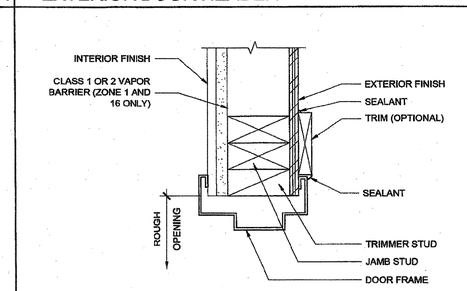

EXTERIOR DOOR JAMB
SCALE : 3"=1'-0" | 7

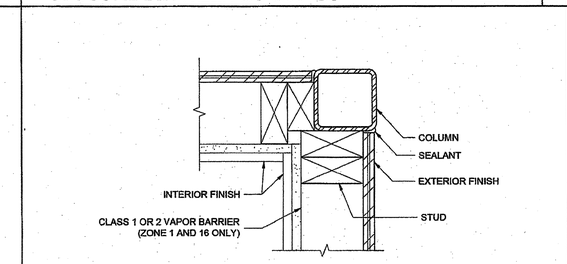

NOTE: FOR 2 x 6 CORNER OPTION, SEE STRUCTURAL
FOR 2 x 8 CORNER OPTION, SEE STRUCTURAL

COLUMN AT CORNER
SCALE : 3"=1'-0" | 2

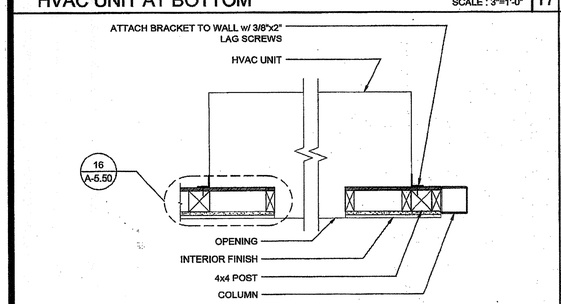

HVAC UNIT (PLAN)
SCALE : 1"=1'-0" | 18

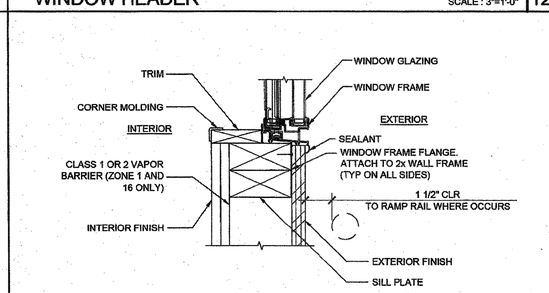

WINDOW SILL
SCALE : 3"=1'-0" | 13

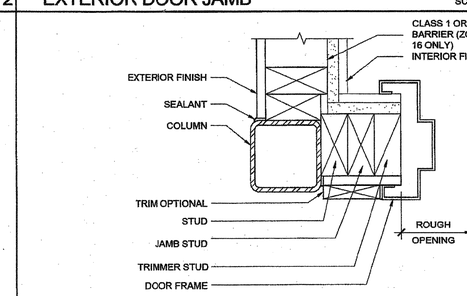

EXTERIOR DOOR JAMB
SCALE : 3"=1'-0" | 8

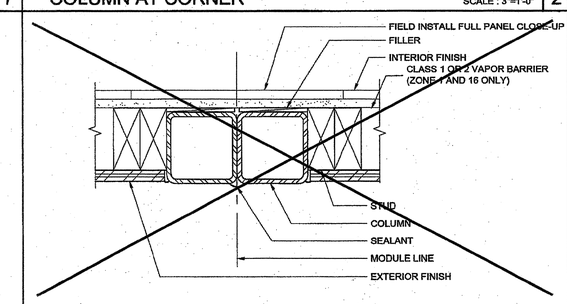

COLUMN AT MODULE LINE (FULL PANEL CLOSE-UP)
SCALE : 3"=1'-0" | 3

NOT USED
19

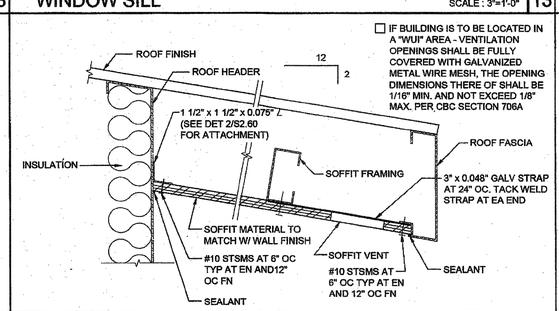

SOFFIT AT ROOF HEADER WITH VENT
SCALE : 3" = 1'-0" | 14

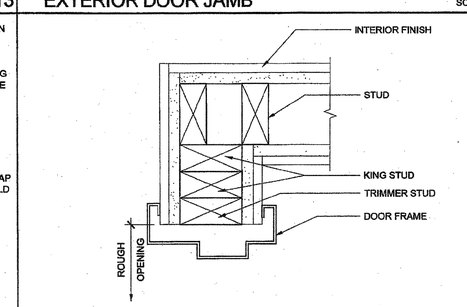

INTERIOR DOOR JAMB
SCALE : 3"=1'-0" | 9

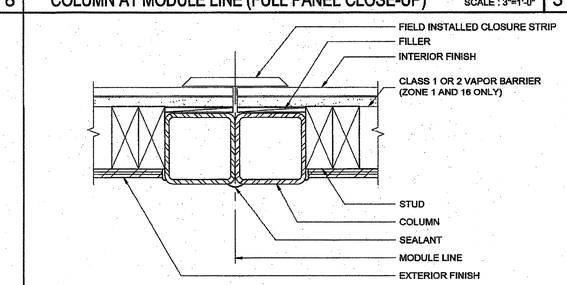

COLUMN AT MODULE LINE (CLOSURE STRIP)
SCALE : 3"=1'-0" | 4

NOT USED
20

NOT USED
15

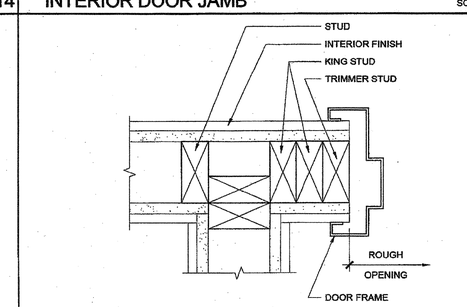

INTERIOR DOOR JAMBS
SCALE : 3"=1'-0" | 10

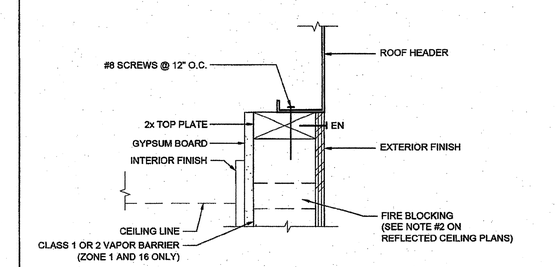

TOP PLATE AT ROOF HEADER
SCALE : 3" = 1'-0" | 5

THESE DRAWINGS AND ALL MATERIAL CONTAINED HEREIN ARE THE PROPERTY OF SILVERCREEK INDUSTRIES, INC (SCI Inc) AND SHALL NOT BE REPRODUCED, COPIED OR OTHERWISE DISPOSED OF DIRECTLY OR INDIRECTLY AND SHALL NOT BE USED IN WHOLE OR IN PART TO ASSIST IN THE MAKING OF OR FOR THE PURPOSE OF FURNISHING ANY INFORMATION FOR THE MAKING OF DRAWINGS, PRINTS, APPARATUS OR PARTS THEREOF WITHOUT THE FULL KNOWLEDGE AND WRITTEN CONSENT OF SCI Inc.
ALL PATENTABLE MATERIAL CONTAINED HEREIN AND ORIGINATING WITH SCI Inc SHALL BE THE PROPERTY OF SCI Inc

SILVER CREEK INDUSTRIES, INC.
"BUILDING FOR THE NEXT GENERATION"
SILVER CREEK
2830 BARRETT AVE PERRIS, CALIFORNIA 92571
PHONE: 951-943-5393 FAX: 951-943-2211

PROJECT NAME:

24x40 STOCKPILE OFFICE BUILDING

SHEET TITLE:

ARCHITECTURAL DETAILS
WOOD STUD - SHTG

LICENSED ARCHITECT
JOHN R. SHIVELY III
C-33467
REN 01-31-2017
STATE OF CALIFORNIA

ARCHITECT OF RECORD SUBMISSION DATE

FILE #: 15-6
IDENTIFICATION STAMP
DIV. OF THE STATE ARCHITECT
OFFICE OF REGULATION SERVICES
03-118270
AC ___ FLS ___ SS CL
DATE NOV - 8 2017
TRACKING #: 63221-290

PROJECT SPECIFIC STATE AGENCY APPROVAL

IDENTIFICATION STAMP
DIV. OF THE STATE ARCHITECT
04 116284 1.
ACS ___ FLS ___ SS RAF
DATE MAY 18 2017

ORIGINAL PC STATE AGENCY APPROVAL

PRE-CONSCHK (PC1) DOCUMENT CODE 8313 CBC
A SEPARATE PROJECT APPLICATION FOR CONSTRUCTION IS REQUIRED

IDENTIFICATION STAMP
DIV. OF THE STATE ARCHITECT
OFFICE OF REGULATION SERVICES
PC 04-114102
AC ___ FLS ___ SS RAF
DATE AUG - 4 2015

REVISIONS
1
2
3
4
5
6
7
8

SILVER CREEK INDUSTRIES
24' x 40' PC - 2:12 PITCH

PROJECT NO:	
DRAWN BY:	
SCALE:	AS NOTED
DATE:	01-30-15
P.C. SHEET NUMBER	A-5.50

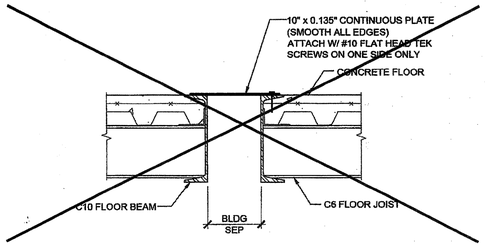

REF: A1.03

FLOOR AT SEPARATION (CONCRETE FLR) SCALE : 1 1/2"=1'-0" 16

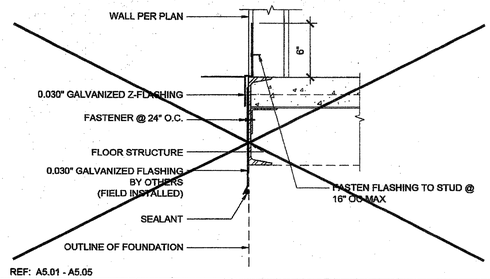

REF: A5.01 - A5.05

SKIRT FLASHING (CONCRETE FLOOR) SCALE : 1 1/2"=1'-0" 11

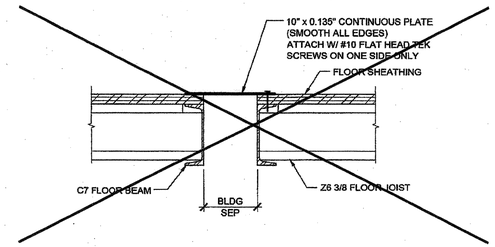

REF: A1.03

FLOOR AT SEPARATION (WOOD FLOOR) SCALE : 1 1/2"=1'-0" 6

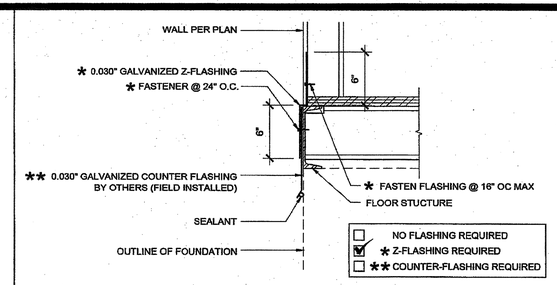

REF: A5.01 - A5.05

SKIRT FLASHING (WOOD FLOOR) SCALE : 1 1/2"=1'-0" 1

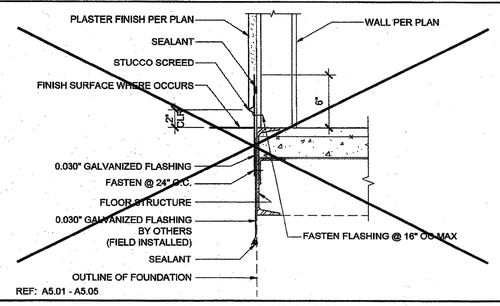

REF: A5.01 - A5.05

17

SKIRT FLASHING (CONCRETE FLOOR) SCALE : 1 1/2"=1'-0" 12

7

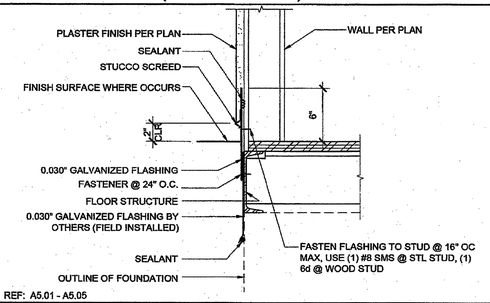

REF: A5.01 - A5.05

SKIRT FLASHING (WOOD FLOOR) SCALE : 1 1/2"=1'-0" 2

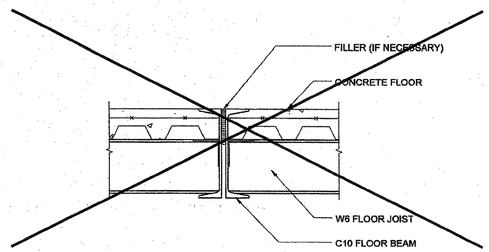

REF: A1.01 - A1.03

18

FLOOR AT MODLINE (CONCRETE FLOOR) SCALE : 1 1/2"=1'-0" 13

8

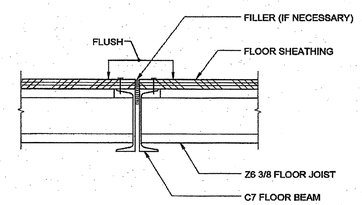

REF: A1.01 - A1.03

FLOOR AT MODLINE (WOOD FLOOR) SCALE : 1 1/2"=1'-0" 3

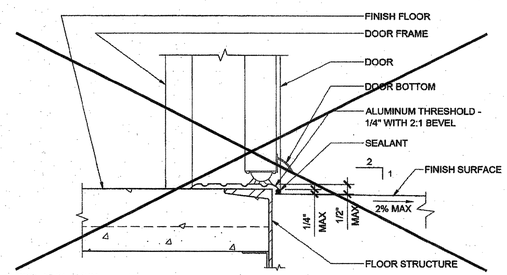

REF: A5.01 - A5.04

19

THRESHOLD SCALE : 3"=1'-0" 14

9

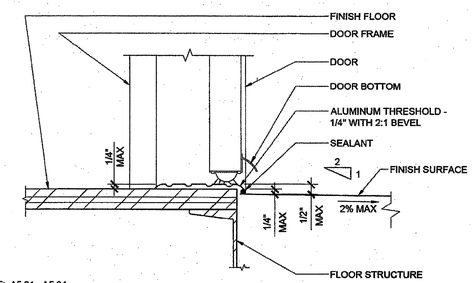

REF: A5.01 - A5.04

THRESHOLD SCALE : 3"=1'-0" 4

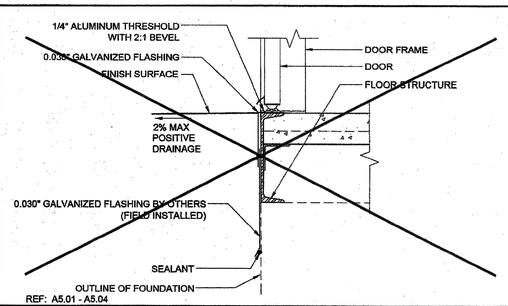

REF: A5.01 - A5.04

20

TYPICAL SILL AT FLOOR (CONCRETE FLOOR) SCALE : 1 1/2"=1'-0" 15

10

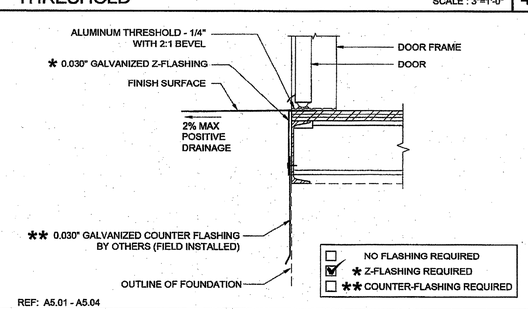

REF: A5.01 - A5.04

TYPICAL SILL AT FLOOR (WOOD FLOOR) SCALE : 1 1/2"=1'-0" 5

THESE DRAWINGS AND ALL MATERIAL CONTAINED HEREIN ARE THE PROPERTY OF SILVERCREEK INDUSTRIES, INC (SCI Inc) AND SHALL NOT BE REPRODUCED, COPIED OR OTHERWISE DISPOSED OF DIRECTLY OR INDIRECTLY AND SHALL NOT BE USED IN WHOLE OR IN PART TO ASSIST IN THE MAKING OF OR FOR THE PURPOSE OF FURNISHING ANY INFORMATION FOR THE MAKING OF DRAWINGS, PRINTS, APPARATUS OR PARTS THEREOF WITHOUT THE FULL KNOWLEDGE AND WRITTEN CONSENT OF SCI Inc.
ALL PATENTABLE MATERIAL CONTAINED HEREIN AND ORIGINATING WITH SCI Inc SHALL BE THE PROPERTY OF SCI Inc

SILVER CREEK INDUSTRIES, INC.
"BUILDING FOR THE NEXT GENERATION"
SILVER CREEK
2830 BARRETT AVE PERRIS, CALIFORNIA 92571
PHONE: 951-943-5393 FAX: 951-943-2211

PROJECT NAME:

24x40 STOCKPILE OFFICE BUILDING

SHEET TITLE:

ARCHITECTURAL DETAILS
FLOOR

LICENSED ARCHITECT
ROGER SHIVELY III
C-33467
REN 01-31-2017
STATE OF CALIFORNIA

ARCHITECT OF RECORD SUBMISSION DATE

FILE # 15-6
IDENTIFICATION STAMP
DIV. OF THE STATE ARCHITECT
OFFICE OF REGULATION SERVICES
03-118270
AC FLS SS
DATE NOV - 8 2017
TRACKING # 53221-1290

PROJECT SPECIFIC STATE AGENCY APPROVAL

IDENTIFICATION STAMP
DIV. OF THE STATE ARCHITECT
04 116284
ACS FLS SS RAF
DATE MAY 1 8 2017

ORIGINAL PC STATE AGENCY APPROVAL

PRE-CHECK (PC) DOCUMENT CODE 2013 CBC
A SEPARATE PROJECT APPLICATION FOR CONSTRUCTION IS REQUIRED

IDENTIFICATION STAMP
DIV. OF THE STATE ARCHITECT
OFFICE OF REGULATION SERVICES
PC 04-114102
AC FLS SS RAF
DATE AUG - 4 2015

REVISIONS

1
2
3
4
5
6
7
8

SILVER CREEK INDUSTRIES
24' x 40' PC - 2:12 PITCH

PROJECT NO:	
DRAWN BY:	
SCALE:	AS NOTED
DATE:	01-30-15

P.C. SHEET NUMBER

A-5.70

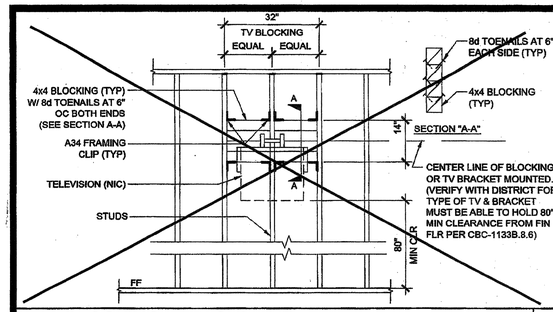

T.V. BLOCKING ATTACHMENT AT WOOD STUD SCALE : 1/2" = 1'-0" 16

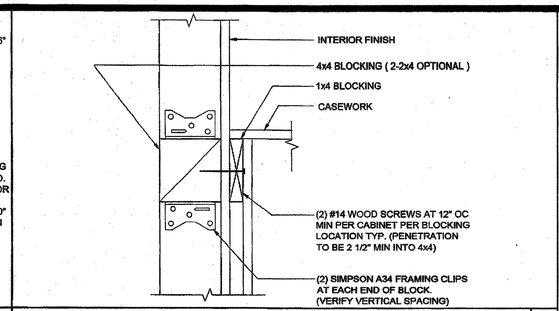

ATTACHMENT TO BLOCKING AT WOOD STUD SCALE : 3" = 1'-0" 11

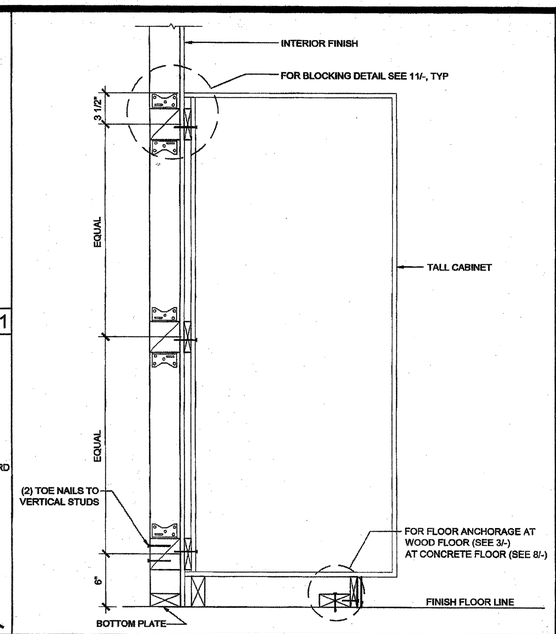

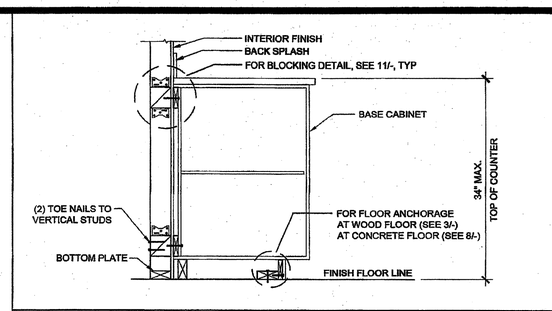

BASE CABINET WALL ANCHORAGE AT WOOD STUD SCALE : 1" = 1'-0" 1

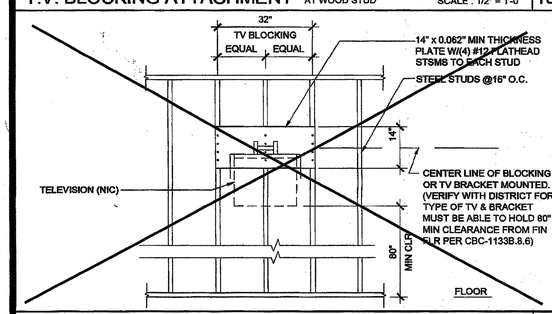

T.V. BLOCKING ATTACHMENT AT STEEL STUD SCALE : 1/2" = 1'-0" 17

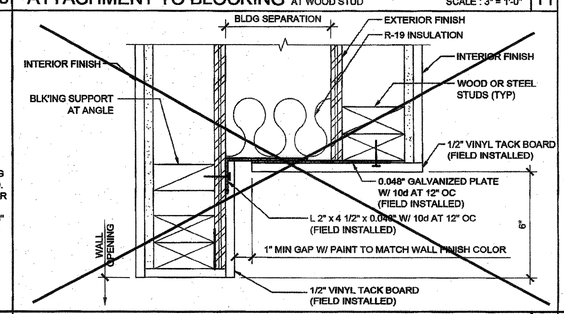

WALL OPENING AT HEADER AND JAMB SCALE : 3"=1'-0" 12

TALL CABINET WALL ANCHORAGE AT WOOD STUD SCALE : 1 1/2" = 1'-0" 7

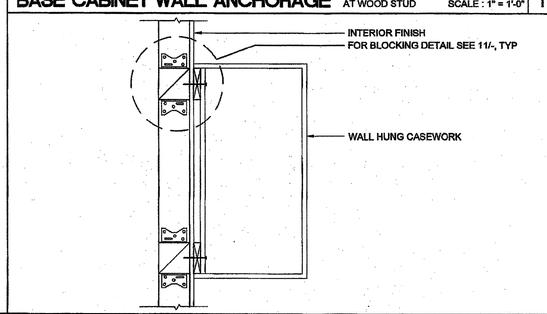

WALL HUNG ANCHORAGE CABINET AT WOOD STUD SCALE : 1 1/2" = 1'-0" 2

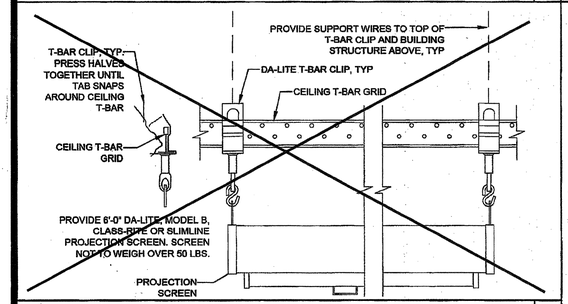

PROJECTION SCREEN MOUNTING SCALE : NTS 18

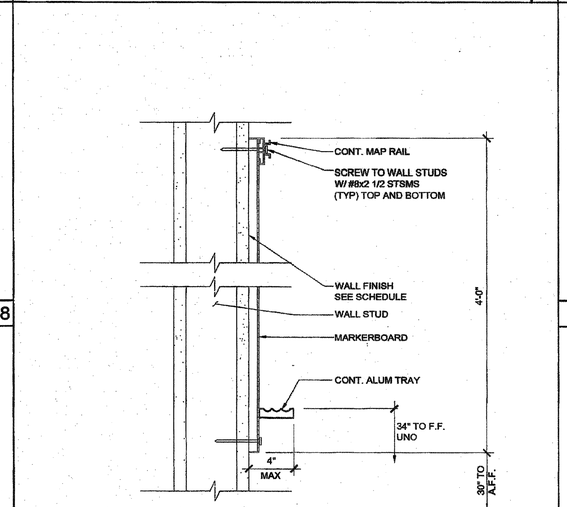

MARKER BOARD ATTACHMENT SCALE : 3" = 1'-0" 14

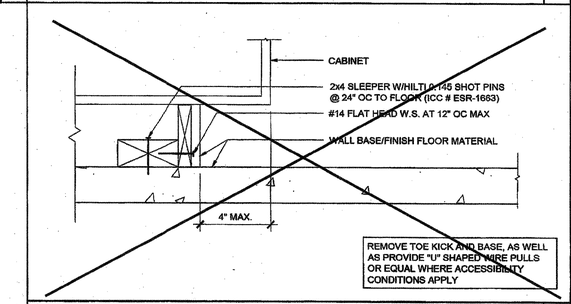

ATTACHMENT TO BLOCKING - CONC. FLOOR SCALE : 3" = 1'-0" 8

ATTACHMENT TO BLOCKING - WOOD FLOOR SCALE : 3" = 1'-0" 3

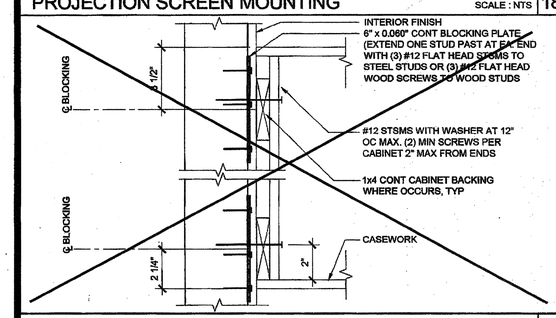

ATTACHMENT TO BLOCKING SCALE : 3" = 1'-0" 19

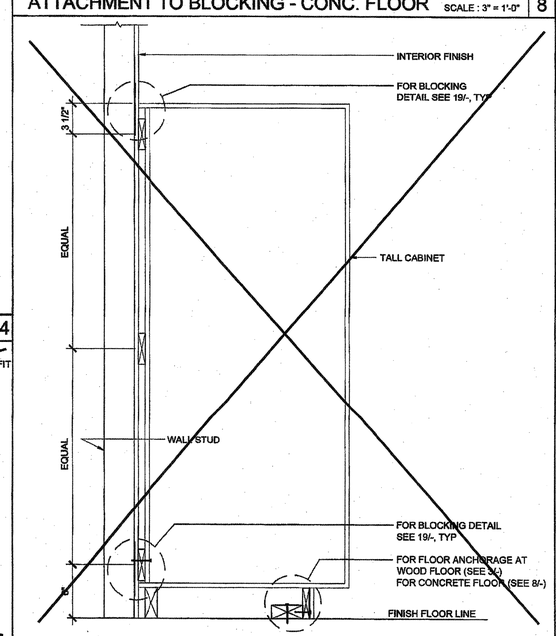

TALL CABINET WALL ANCHORAGE SCALE : 1 1/2" = 1'-0" 10

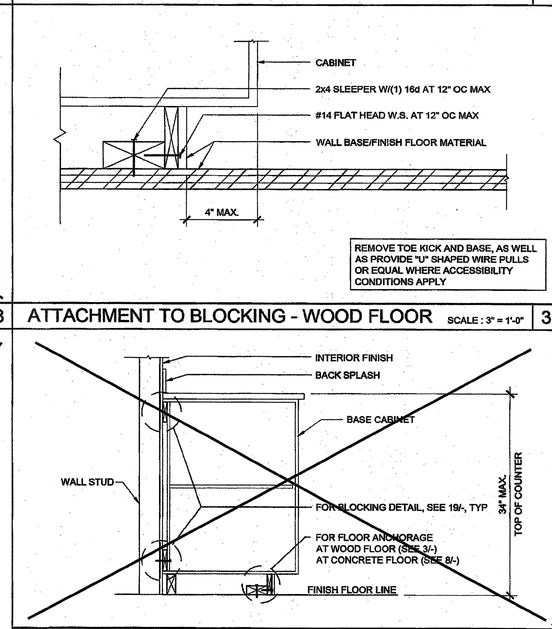

BASE CABINET WALL ANCHORAGE SCALE : 1" = 1'-0" 4

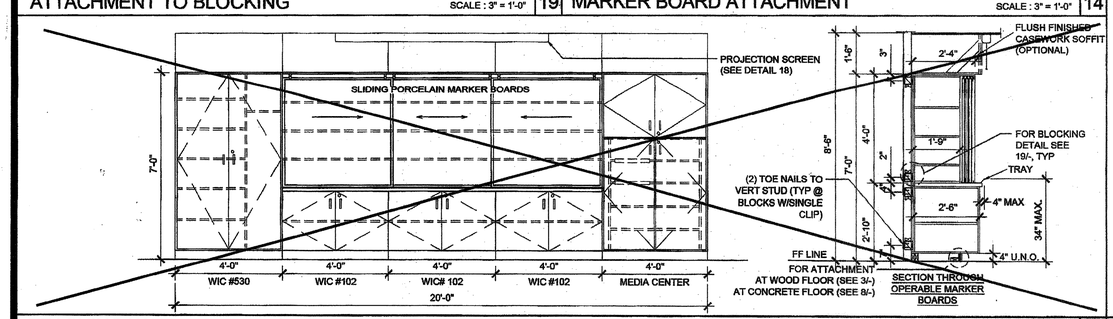

TEACHING WALL - ELEVATION / SECTION - OPTION SCALE : 3/8" = 1'-0" 15

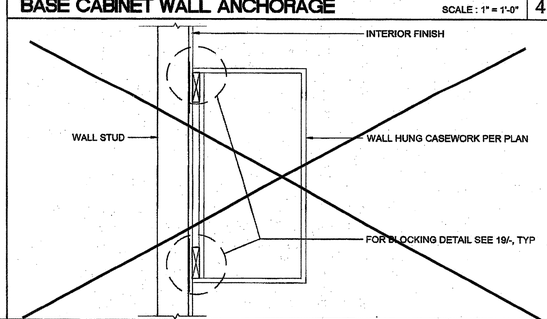

WALL HUNG ANCHORAGE CABINET SCALE : 1 1/2" = 1'-0" 5

THESE DRAWINGS AND ALL MATERIAL CONTAINED HEREIN ARE THE PROPERTY OF SILVERCREEK INDUSTRIES, INC (SCI Inc) AND SHALL NOT BE REPRODUCED, COPIED OR OTHERWISE DISPOSED OF DIRECTLY OR INDIRECTLY AND SHALL NOT BE USED IN WHOLE OR IN PART TO ASSIST IN THE MAKING OF OR FOR THE PURPOSE OF FURNISHING ANY INFORMATION FOR THE MAKING OF DRAWINGS, PRINTS, APPARATUS OR PARTS THEREOF WITHOUT THE FULL KNOWLEDGE AND WRITTEN CONSENT OF SCI Inc.
ALL PATENTABLE MATERIAL CONTAINED HEREIN AND ORIGINATING WITH SCI Inc SHALL BE THE PROPERTY OF SCI Inc

SILVER CREEK INDUSTRIES, INC.
"BUILDING FOR THE NEXT GENERATION"
SILVER CREEK
2830 BARRETT AVE PERRIS, CALIFORNIA 92571
PHONE: 951-943-5393 FAX: 951-943-2211

PROJECT NAME:

24x40 STOCKPILE OFFICE BUILDING

SHEET TITLE:

ARCHITECTURAL DETAILS
MISCELLANEOUS/OPTIONS

LICENSED ARCHITECT — JACK R. BRIVELTH — C-33467 — REN 01-31-2017 — STATE OF CALIFORNIA

ARCHITECT OF RECORD SUBMISSION DATE

FILE #: 15-6
IDENTIFICATION STAMP DIV. OF THE STATE ARCHITECT OFFICE OF REGULATION SERVICES
03-118270
AC FLS SS
DATE NOV - 8 2017
TRACKING #: 63221-290

PROJECT SPECIFIC STATE AGENCY APPROVAL

IDENTIFICATION STAMP DIV. OF THE STATE ARCHITECT
04 116284
ACS FLS SS RAF
DATE MAY 4 2017

ORIGINAL PC STATE AGENCY APPROVAL

FIRE-SHIELD (PC) DOCUMENT CODE: 2013 CBC
A SEPARATE PROJECT APPLICATION FOR CONSTRUCTION IS REQUIRED
IDENTIFICATION STAMP DIV. OF THE STATE ARCHITECT OFFICE OF REGULATION SERVICES
PC 04-114102
AC FLS SS RAF
DATE AUG - 4 2015

REVISIONS
1
2
3
4
5
6
7
8

SILVER CREEK INDUSTRIES
24' x 40' PC - 2:12 PITCH

PROJECT NO:	
DRAWN BY:	
SCALE:	AS NOTED
DATE:	01-30-15

P.C. SHEET NUMBER

A-5.80

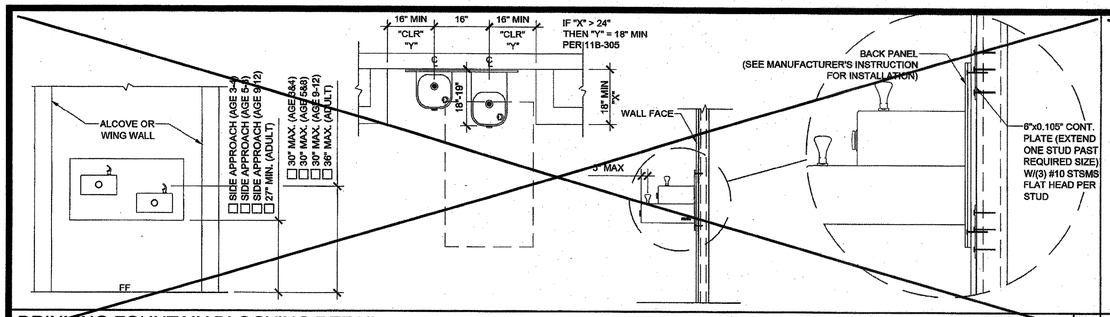

DRINKING FOUNTAIN BLOCKING DETAIL AT STEEL STUD

SCALE : 1/2" = 1'-0" | 11

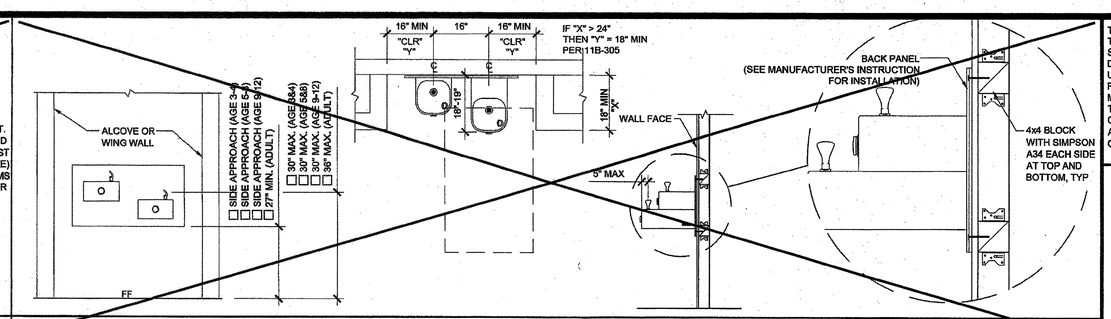

DRINKING FOUNTAIN BLOCKING DETAIL AT WOOD STUD

SCALE : 1/2" = 1'-0" | 1

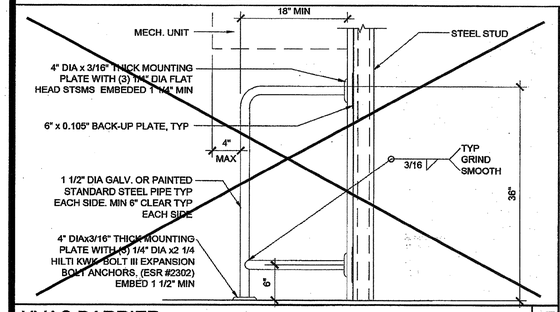

HVAC BARRIER AT STEEL STUD

SCALE : 1" = 1'-0" | 17

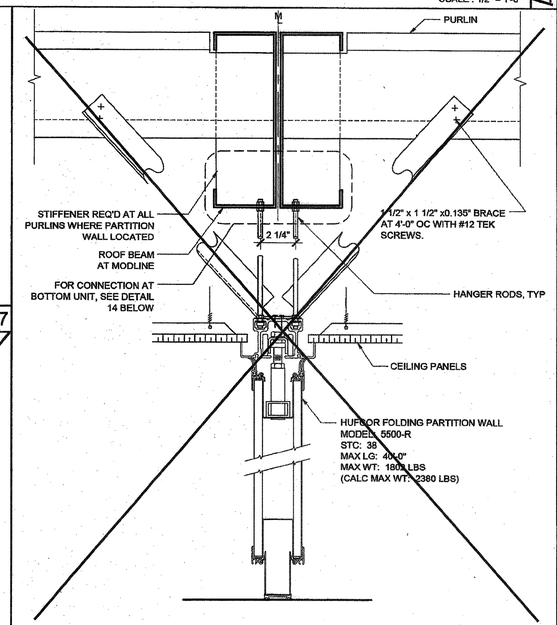

FOLDING WALL PARTITION ATTACHMENT

SCALE : 3" = 1'-0" | 13

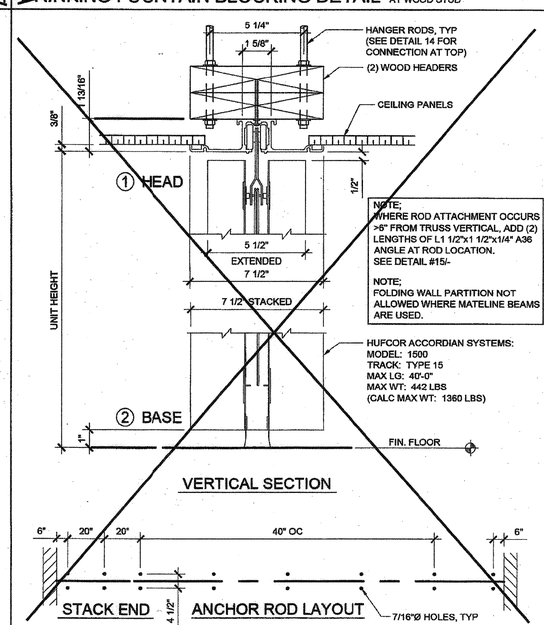

ACCORDION PARTITION ATTACHMENT

SCALE : 3" = 1'-0" | 8

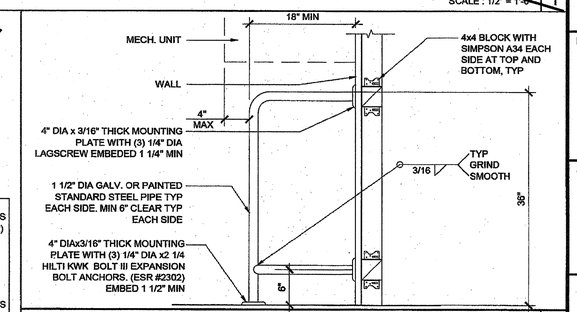

HVAC BARRIER AT WOOD STUD

SCALE : 1" = 1'-0" | 2

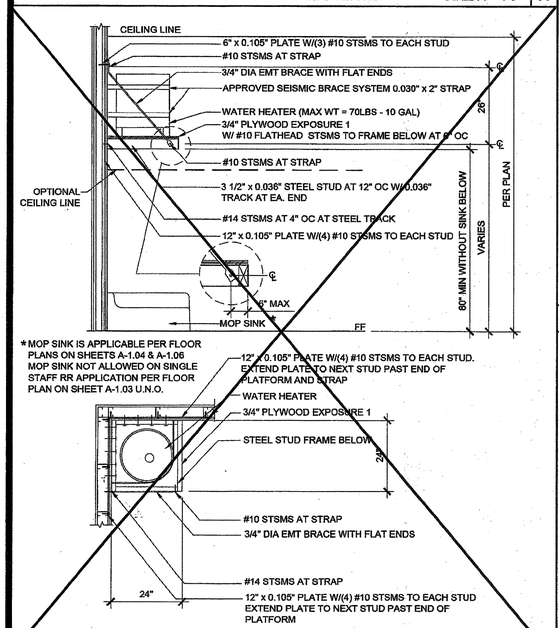

WATER HEATER SHELF AT STEEL STUD

SCALE : 1/2" = 1'-0" | 19

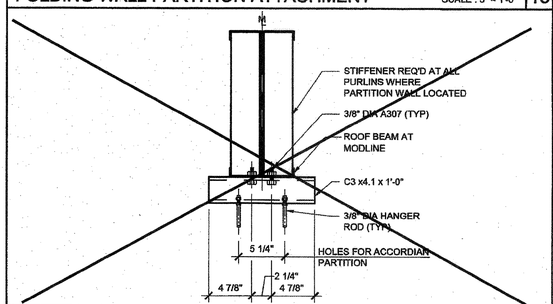

ACCORDIAN PARTITION - TOP CONN TO ROOF BEAMS

SCALE : 1 1/2" = 1'-0" | 14

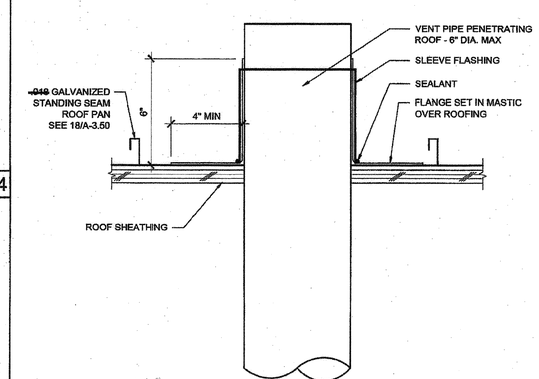

PIPE PENETRATION THROUGH ROOF

SCALE : 3"=1'-0" | 10

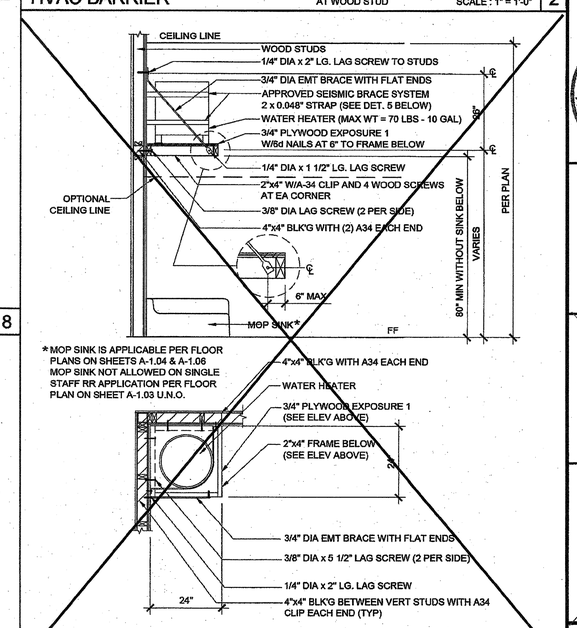

WATER HEATER SHELF AT WOOD STUD

SCALE : 1/2" = 1'-0" | 4

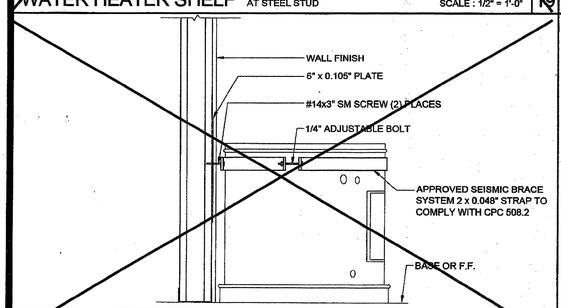

WATER HEATER BRACING AT STEEL STUD

SCALE : 1 1/2" = 1'-0" | 20

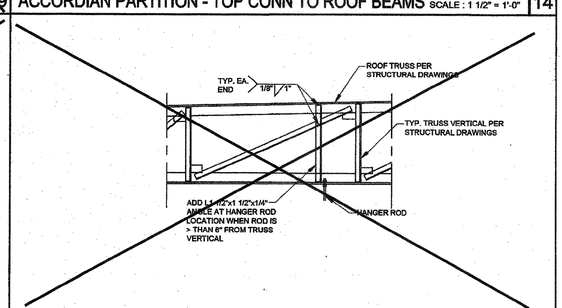

TRUSS SUPPORT @ HANGER ROD

SCALE : 1/2" = 1'-0" | 15

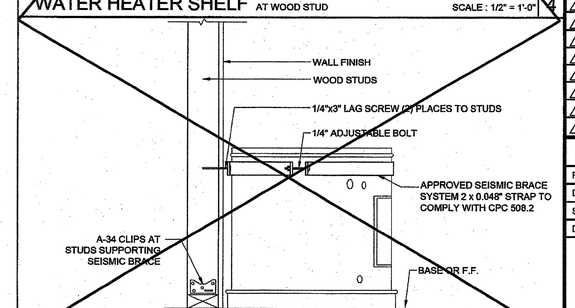

WATER HEATER BRACING AT WOOD STUD

SCALE : 1 1/2" = 1'-0" | 5

THESE DRAWINGS AND ALL MATERIAL CONTAINED HEREIN ARE THE PROPERTY OF SILVERCREEK INDUSTRIES, INC (SCI Inc) AND SHALL NOT BE REPRODUCED, COPIED OR OTHERWISE DISPOSED OF DIRECTLY OR INDIRECTLY AND SHALL NOT BE USED IN WHOLE OR IN PART TO ASSIST IN THE MAKING OF OR FOR THE PURPOSE OF FURNISHING ANY INFORMATION FOR THE MAKING OF DRAWINGS, PRINTS, APPARATUS OR PARTS THEREOF WITHOUT THE FULL KNOWLEDGE AND WRITTEN CONSENT OF SCI Inc.
ALL PATENTABLE MATERIAL CONTAINED HEREIN AND ORIGINATING WITH SCI Inc SHALL BE THE PROPERTY OF SCI Inc

SILVER CREEK INDUSTRIES, INC.
"BUILDING FOR THE NEXT GENERATION"
SILVER CREEK
2830 BARRETT AVE PERRIS, CALIFORNIA 92571
PHONE: 951-943-5393 FAX: 951-943-2211

PROJECT NAME:

24x40 STOCKPILE OFFICE BUILDING

SHEET TITLE:

ARCHITECTURAL DETAILS
MISCELLANEOUS/OPTIONS

LICENSED ARCHITECT — JACK A. SHIVELY III — C-33467 — REN 01-31-2017 — STATE OF CALIFORNIA

ARCHITECT OF RECORD SUBMISSION DATE
FILE #: 15-6
IDENTIFICATION STAMP DIV. OF THE STATE ARCHITECT OFFICE OF REGULATION SERVICES
03-118270
AC FLS SS
DATE NOV - 8 2017
TRACKING #: 63221-290

PROJECT SPECIFIC STATE AGENCY APPROVAL
IDENTIFICATION STAMP DIV. OF THE STATE ARCHITECT
04 116284
AC FLS SS
DATE MAY 18 2017

ORIGINAL PC STATE AGENCY APPROVAL
PRE-CHECK (PC) DOCUMENT CODE: 2013 CBC
A SEPARATE REQUEST APPLICATION FOR CONSTRUCTION IS REQUIRED
IDENTIFICATION STAMP DIV. OF THE STATE ARCHITECT OFFICE OF REGULATION SERVICES
PC 04-114102
AC FLS SS
DATE AUG - 4 2015

REVISIONS
1
2
3
4
5
6
7
8

SILVER CREEK INDUSTRIES
24' x 40' PC - 2:12 PITCH

PROJECT NO:	
DRAWN BY:	
SCALE:	AS NOTED
DATE:	01-30-15
P.C. SHEET NUMBER	A-5.81

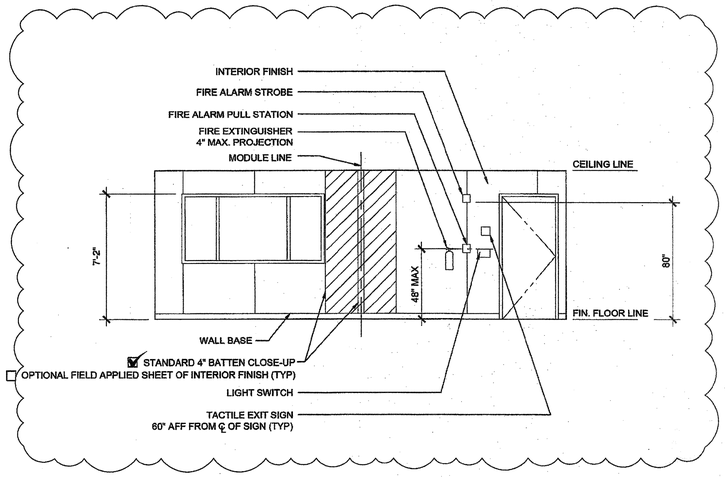

FRONT ELEVATION SCALE: 1/4" = 1'-0" 3

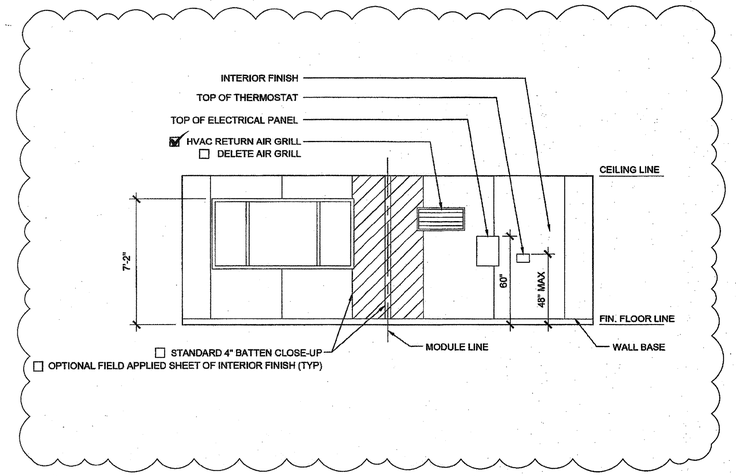

REAR ELEVATION SCALE: 1/4" = 1'-0" 1

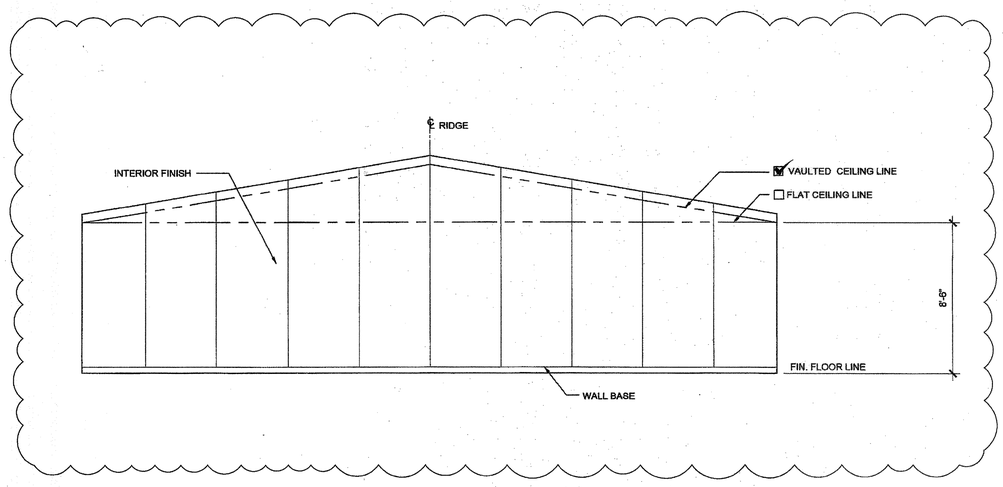

SIDE ELEVATION SCALE: 1/4" = 1'-0" 4

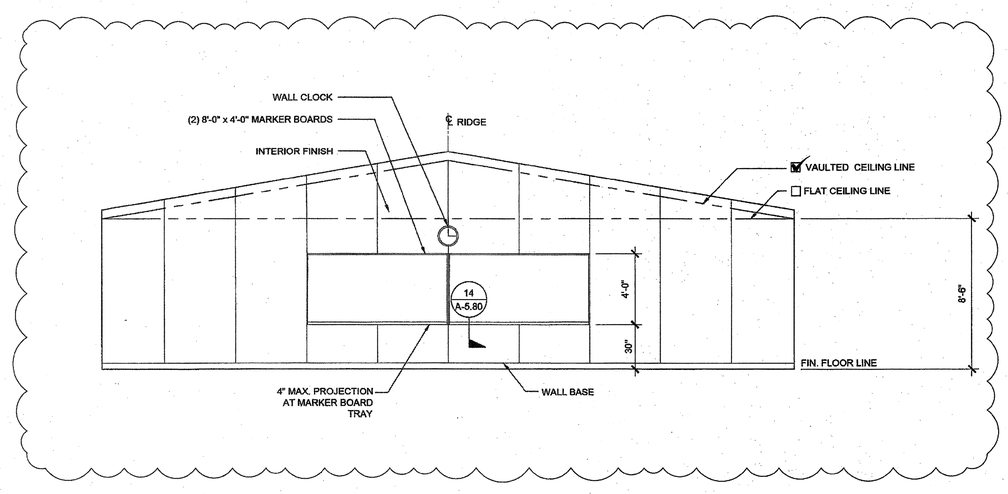

SIDE ELEVATION SCALE: 1/4" = 1'-0" 2

THESE DRAWINGS AND ALL MATERIAL CONTAINED HEREIN ARE THE PROPERTY OF SILVERCREEK INDUSTRIES, INC (SCI Inc) AND SHALL NOT BE REPRODUCED, COPIED OR OTHERWISE DISPOSED OF DIRECTLY OR INDIRECTLY AND SHALL NOT BE USED IN WHOLE OR IN PART TO ASSIST IN THE MAKING OF OR FOR THE PURPOSE OF FURNISHING ANY INFORMATION FOR THE MAKING OF DRAWINGS, PRINTS, APPARATUS OR PARTS THEREOF WITHOUT THE FULL KNOWLEDGE AND WRITTEN CONSENT OF SCI Inc.
ALL PATENTABLE MATERIAL CONTAINED HEREIN AND ORIGINATING WITH SCI Inc SHALL BE THE PROPERTY OF SCI Inc

SILVER CREEK INDUSTRIES, INC.
"BUILDING FOR THE NEXT GENERATION"
SILVER CREEK
2830 BARRETT AVE PERRIS, CALIFORNIA 92571
PHONE: 951-843-5393 FAX: 951-843-2211

PROJECT NAME:

24x40 STOCKPILE OFFICE BUILDING

SHEET TITLE:

INTERIOR ELEVATION 24' x 40'

LICENSED ARCHITECT
JACK F. SHIVELY III
C-33467
REN 01-31-2017
STATE OF CALIFORNIA

ARCHITECT OF RECORD SUBMISSION DATE

FILE #: 15-6
IDENTIFICATION STAMP
DIV. OF THE STATE ARCHITECT
OFFICE OF REGULATION SERVICES
03-118270
AC FLS SS CL
DATE NOV - 8 2017
TRACKING #: 63221-290

PROJECT SPECIFIC STATE AGENCY APPROVAL

IDENTIFICATION STAMP
DIV. OF THE STATE ARCHITECT
04 116284 12
ACS CO FLS SS RAF
DATE MAY 18 2017

ORIGINAL PC STATE AGENCY APPROVAL

PRE-CHECK (PC) DOCUMENT
CODE 2013 CBC
A SEPARATE PROJECT APPLICATION FOR CONSTRUCTION IS REQUIRED

IDENTIFICATION STAMP
DIV. OF THE STATE ARCHITECT
OFFICE OF REGULATION SERVICES
PC 04-114102
AC FLS SS RAF
DATE AUG - 4 2015

REVISIONS
1
2
3
4
5
6
7
8

SILVER CREEK INDUSTRIES
24' x 40' PC - 2:12 PITCH

PROJECT NO:	
DRAWN BY:	
SCALE:	AS NOTED
DATE:	01-30-15

P.C. SHEET NUMBER

A-6.01

REFER TO SHEET "A-6.01N" FOR PROJECT SPECIFIC

KEY PLAN VENTING CALCULATIONS W/O PARAPET

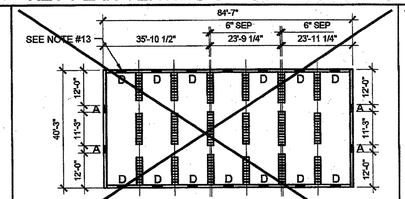

☐ 85' x 40' BUILDING: 3400 SF / 150 = 22.66 SF VENT REQ'D
(4) - "A" VENT = 5.00 SF
(13) - "D" VENT = 17.81 SF
22.81 SF TOTAL VENTILATION (> 22.66 SF)
(VAPOR BARRIER REQUIRED)

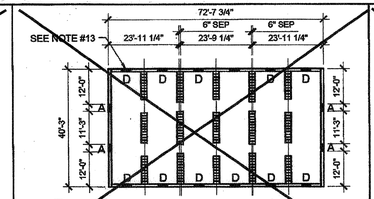

☐ 73'-8" x 40' BUILDING: 2920 SF / 150 = 19.46 SF VENT REQ'D
(4) - "A" VENT = 5.00 SF
(11) - "D" VENT = 15.07 SF
20.07 SF TOTAL VENTILATION (> 19.46 SF)
(VAPOR BARRIER REQUIRED)

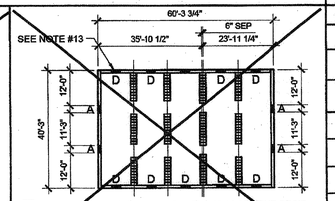

☐ 60'-6" x 40' BUILDING: 2420 SF / 150 = 16.13 SF VENT REQ'D
(4) - "A" VENT = 5.00 SF
(9) - "D" VENT = 12.33 SF
17.33 SF TOTAL VENTILATION (> 16.13 SF)
(VAPOR BARRIER REQUIRED)

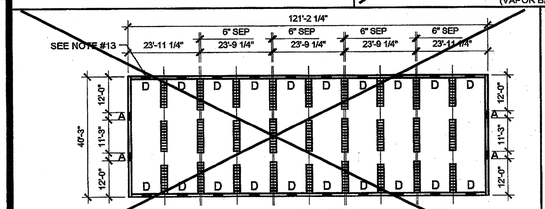

☐ 122'-0" x 40' BUILDING: 4880 SF / 150 = 32.53 SF VENT REQ'D
(4) - "A" VENT = 5.00 SF
(20) - "D" VENT = 27.5 SF
32.5 SF TOTAL VENTILATION (> 32.53 SF)
(VAPOR BARRIER REQUIRED)

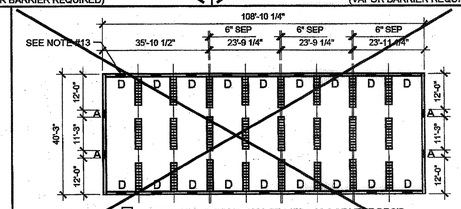

☐ 109'-6" x 40' BUILDING: 4380 SF / 150 = 29.2 SF VENT REQ'D
(4) - "A" VENT = 5.00 SF
(18) - "D" VENT = 24.66 SF
29.66 SF TOTAL VENTILATION (> 29.2 SF)
(VAPOR BARRIER REQUIRED)

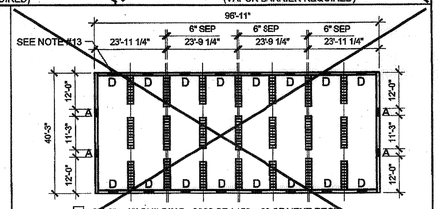

☐ 97'-6" x 40' BUILDING: 3900 SF / 150 = 26 SF VENT REQ'D
(4) - "A" VENT = 5.00 SF
(16) - "D" VENT = 21.92 SF
26.92 SF TOTAL VENTILATION (> 26 SF)
(VAPOR BARRIER REQUIRED)

WOOD FOUNDATION PLATE SCHEDULE

100 PSF

PLATES	END WALL	SIDE WALL	MODLINE PAD AT END WALL	MODLINE PAD AT INTERIOR	SEPARATION PAD AT ENDWALL		SEPARATION PAD AT INTERIOR	
					☐ SEPARATE BLDGS	☐ ONE BLDG	☐ SEPARATE BLDGS	☐ ONE BLDG
ADDITIONAL (AS NEEDED)	2x4	2x4	2x6	2x6	(2) ROWS OF 2x4	2x12	(2) ROWS OF 2x4	2x12
TOP	2x6	2x6	2x8	2x8	(2) ROWS OF 2x6	2x12	(2) ROWS OF 2x6	2x12
BLOCK	2x8	2x8	2x10	2x10	(2) ROWS OF 2x8	2x12	(2) ROWS OF 2x8	2x12
SILL	2x14	2x14	(11) 2x12 x 2'-0"	(10) 2x12 x 2'-0"	(2) ROWS OF 2x14	(12) 2x12 x 2'-0"	(2) ROWS OF 2x14	(12) 2x12 x 2'-0"

KEY PLAN VENTING SCHEDULE

VENT "A" (SIDEWALL): 2'-6" x 6" = 1.25 S.F. VENTILATION

"VENT OPENING BELOW CONT UPPER PLATE"

VENT "B" (ENDWALL): 2'-9" x 3" = 0.68 S.F. VENTILATION

(OPTIONAL AT MULTIPLE BLDG SETS) "VENT OPENING ABOVE CONT. SILL AND BLOCK PLATE"

VENT "C" (ENDWALL): 2'-9" x 4 1/2" = 1.03 S.F. VENTILATION

(OPTIONAL AT MULTIPLE BLDG SETS) "VENT OPENING ABOVE CONT. SILL AND BLOCK PLATES"

VENT "D" (ENDWALL): 2'-9" x 6" = 1.37 S.F. VENTILATION

(OPTIONAL AT MULTIPLE BLDG SETS) "VENT OPENING ABOVE CONT. SILL AND BLOCK PLATES"

FOUNDATION PLATE DESCRIPTION

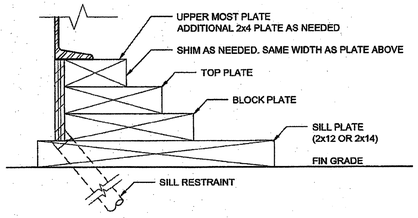

NOTES

1. BUILDINGS OVER 2160 SF, MUST BE INSTALLED ON A PERMANENT CONCRETE FOUNDATION PER IR 16-1 ITEM 1.4.
2. FOUNDATION PLAN HAS A 1/4" ADDED AT EACH MODULE LINE AND DOES NOT MATCH THE FLOOR PLAN. ADDITIONAL LENGTH ADDED FOR GROWTH THAT IS EXPERIENCED WHEN SETTING MULTIPLE MODULAR FLOORS.
3. FOUNDATION VENTS THAT OCCUR UNDER RAMP LANDINGS, PROVIDE AN EQUAL AREA OF SCREENED VENT IN LANDING SKIRT.
4. WOOD SILL (FOOTING) PLATES SHALL BE PRESSURE TREATED HEM-FIR AND MAY BEAR DIRECTLY ON SOIL OR PAVED SURFACE. GRASS OR TURF SHALL BE CLEARED TO BARE SOIL UNDER THE ENTIRE AREA OF THE BUILDING BY OTHERS. THE WOOD SILL FOOTING PLATE MAY SUPPORT CONTINUOUS BLOCKING AND SHEATHING SKIRT WHICH NEED NOT BE TREATED.
5. SILL RESTRAINT:
   THE FOUNDATION SHALL BE DESIGNED TO PREVENT SLIDING ON THE SUPPORTING SURFACE BY ATTACHING THE WOOD FOUNDATION PLATES FOR THE BUILDING, RAMPS AND STAIRS TO THE GROUND WITH RESTRAINING DEVICES. AN ACCEPTABLE DESIGN WOULD INCORPORATE ONE-INCH DIAMETER STANDARD WEIGHT (1.315" ACTUAL O.D.) HOT DIPPED GALVANIZED PIPES OR ONE-INCH DIAMETER SOLID STEEL RODS SPACED AT NOT MORE THAN 10'-0" O.C. ONE PIPE / ROD SHALL BE LOCATED A MAXIMUM OF TWO FEET FROM EACH CORNER IN BOTH DIRECTIONS AND A MINIMUM OF TWO PIPES / RODS PER DISCONTINUOUS FOUNDATIONS STRIP. PIPES SHOULD PENETRATE INTO SOIL, CONCRETE, AND/OR PAVING A MINIMUM OF 12" MEASURED VERTICALLY. ALTERNATE OR EQUIVALENT DESIGNS, WHEN PROVIDED WITH STRUCTURAL CALCULATIONS AND DETAILS, WILL BE SUBMITTED TO DSA FOR REVIEW AND APPROVAL.
6. STACKED WOOD MEMBERS FOR FOUNDATIONS AND PRESSURE TREATED LUMBER SHALL BE NAILED WITH HOT DIPPED GALVANIZED PER ASTM A-153
7. VENTILATION OPENINGS SHALL BE COVERED FOR EITHER HEIGHT AND WIDTH WITH CORROSION - RESISTANT WIRE MESH, WITH A CLEAR "THROUGH" DIMENSION NOT EXCEEDING 1/8" ACTING AS A VERMIN BARRIER.
8. VENTING CALCULATION REQUIREMENTS FOR MULTIPLE BUILDING SETS MUST BE CALCULATED WITH OVERALL SQUARE FOOTAGE INCLUDING SEPARATION.
9. FOR FOUNDATION ANCHORAGE ON CONCRETE PAD, SEE DETAIL 15/F0.50
10. IF OPTIONAL ENDWALL VENTS ARE APPLIED, SILL PLATE AND BLOCK PLATE MUST BE CONTINUOUS. VENT OPENINGS SHALL BE BROKEN ABOVE THE BLOCK PLATE
11. FOR FOUNDATION SPLICE - SEE 5/F-0.50
12. CRAWLSPACE VAPOR RETARDERS (OPTIONAL):
    THE OPTIONAL TOTAL AREA OF VENTILATION OPENINGS IS PERMITTED TO BE REDUCED TO 1/1500 FACTOR WITH AN APPROVED VAPOR RETARDER MATERIAL PER CBC SECTION 1203.3.2(2).
    MATERIALS:
    GROUND SURFACE COVERED WITH AN APPROVED VAPOR RETARDER MATERIAL; MUST HAVE A PERM RATING OF ONE OR LESS; SHOULD BE CONTINUOUS; POLYETHELYNE FILM (≥ 6 MIL); POOL LINER (PUNCTURE RESISTANT); AND POLYETHELYNE FILM WITH RAT SLAB.
    INSTALLATION RECOMMENDATIONS:
    OVERLAP JOINTS BY 6 INCHES; TAPE OR SEAL ALL JOINTS; ATTACH VAPOR RETARDER OVER SILL PLATE PER 10/F0.50; SEAL TO ALL PIERS AND OTHER PENETRATIONS.
13. ENDWALL VENTS (IF REQ'D) SHALL BE LOCATED A MIN OF 24" FROM BUILDING CORNERS. MAXIMUM ONE ENDWALL VENT PER 12'-0" MODULE
14. CONCRETE FLOOR LOAD IS INCLUDED IN THE CONCRETE FOUNDATION OPTION FOR FOUNDATION & ANCHORAGE DESIGN, I.E. THERE IS NO CONCRETE FLOOR FOR WOOD FOUNDATION OPTION. THERE IS CONCRETE FLOOR FOR CONCRETE FOUNDATION OPTION
15. IF PARAPET IS HIGHER THAN 18". COMBINATION REQUIRES A 2 X 14" OR 2 X 16" SILL PLATE @ EXTERIOR OF BUILDING
16. 150 PSF FLOOR LIVE LOAD OPTION CANNOT BE USED WITH THE STUCCO WALL OPTION
17. VENTS AT MODLINE FOUNDATIONS. THE MINIMUM CRITERIA REQUIREMENT AS FOLLOWS:
    A. VENTS HAVE A MINIMUM OF 2 SILL /BLOCKING PLATES BENEATH.
    B. VENTS ARE A MAXIMUM OF 6" LONG x 3" MIN. HIGH.
    C. VENTS ARE SPACED A MINIMUM OF 8" APART (EDGE TO EDGE) AND 24" MIN. FROM CORNERS.

NAILING SCHEDULE

BUILDING SIZE	(2) 16d BOX NAILS PLATE TO PLATE ATTACHMENT BELOW UPPER MOST PLATE
24' x 40'	8" OC AT ENDWALL - 1 / F-0.50 18" OC AT SIDEWALL - 2 / F-0.50 12" OC AT SEPARATION - 4 / F-0.50

VENTING SCHEDULE

BUILDING SIZE	BUILDING AREA	REQUIRED VENTING	SIDEWALL VENTING	ENDWALL VENTING	TOTAL VENTING SUPPLIED
24' x 40'	960 SF	6.4 SF (1/150)	4.125" x 4.5" = (4) 1.54 SF/ EA (6.16 SF TOTAL)	2.75" x 4.5" = (1) 1.03 SF/ EA (1.03 SF TOTAL)	7.19 SF SEE NOTE #8

TIE PLATE SCHEDULE

BUILDING SIZE	SIDE WALL TIE PLATES	END WALL TIE PLATES	TOTAL NUMBER OF TIE PLATES
24' x 40'	3	4	14

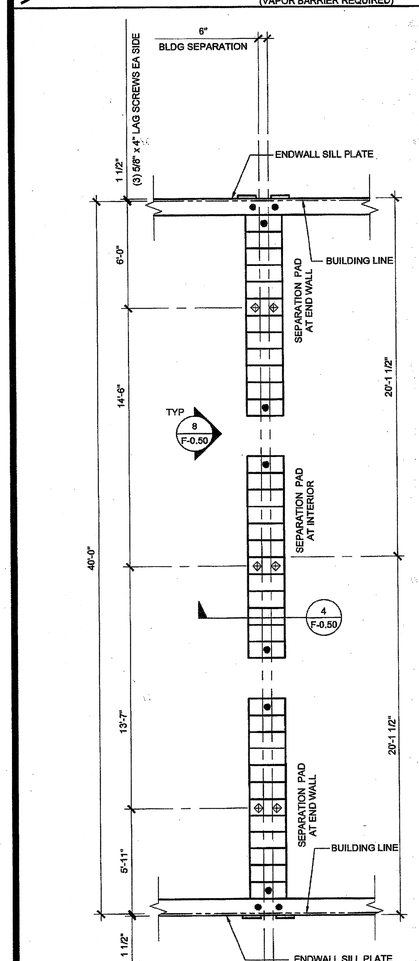

ONE BUILDING

FOOTING AT SEPARATION SCALE: 1/4" = 1' - 0" 3

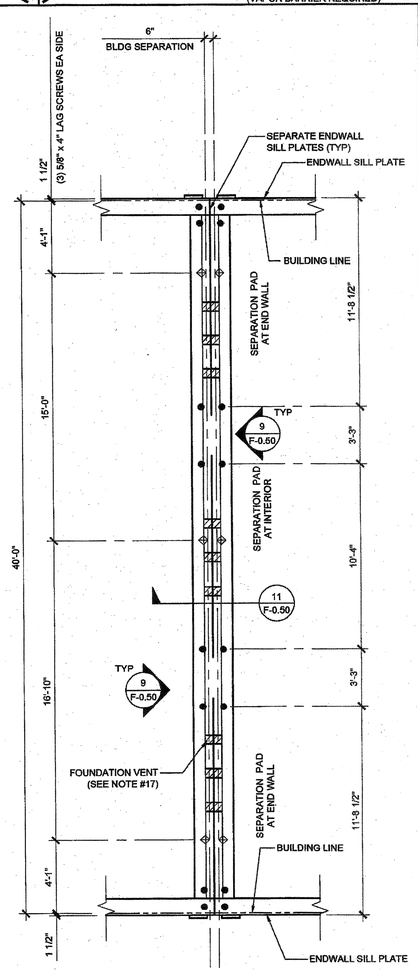

SEPARATE BUILDINGS

FOOTING AT SEPARATION SCALE: 1/4" = 1' - 0" 2

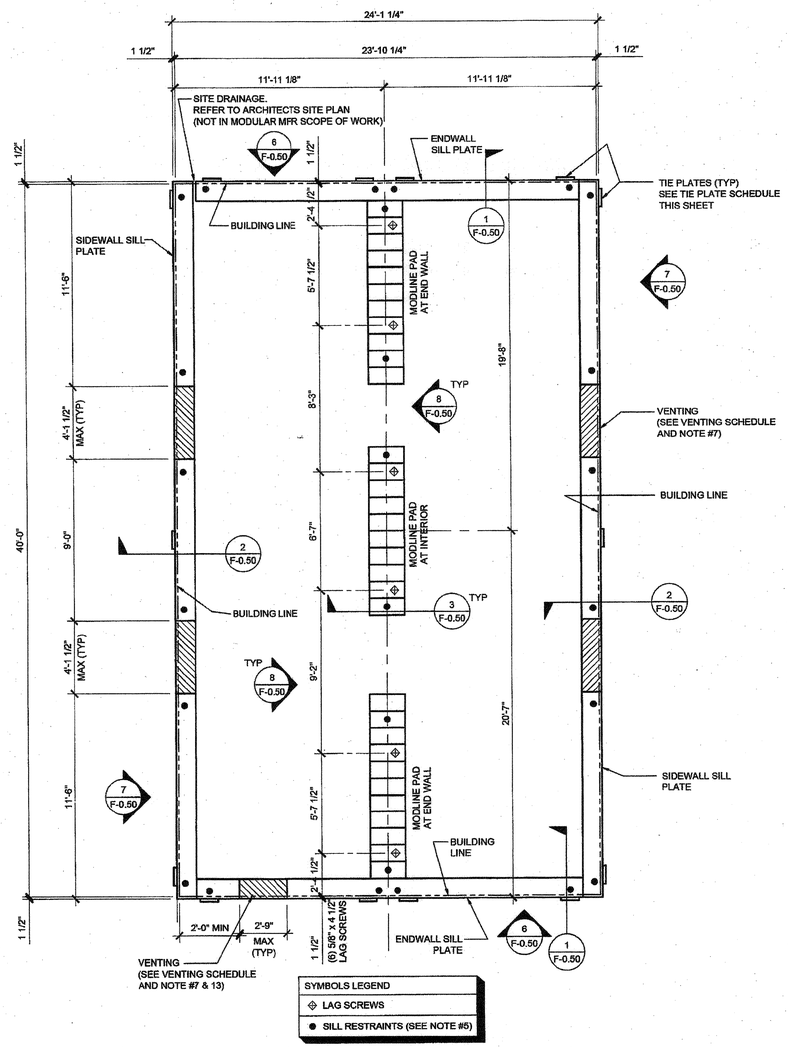

FOUNDATION PLAN SCALE: 1/4" = 1' - 0" 1

THESE DRAWINGS AND ALL MATERIAL CONTAINED HEREIN ARE THE PROPERTY OF SILVERCREEK INDUSTRIES, INC (SCI Inc) AND SHALL NOT BE REPRODUCED, COPIED OR OTHERWISE DISPOSED OF DIRECTLY OR INDIRECTLY AND SHALL NOT BE USED IN WHOLE OR IN PART TO ASSIST IN THE MAKING OF OR FOR THE PURPOSE OF FURNISHING ANY INFORMATION FOR THE MAKING OF DRAWINGS, PRINTS, APPARATUS OR PARTS THEREOF WITHOUT THE FULL KNOWLEDGE AND WRITTEN CONSENT OF SCI Inc.
ALL PATENTABLE MATERIAL CONTAINED HEREIN AND ORIGINATING WITH SCI Inc SHALL BE THE PROPERTY OF SCI Inc

SILVER CREEK INDUSTRIES, INC.
"BUILDING FOR THE NEXT GENERATION"
SILVER CREEK
2830 BARRETT AVE PERRIS, CALIFORNIA 92571
PHONE: 951-943-5393 FAX: 951-943-2211

PROJECT NAME:

24x40 STOCKPILE OFFICE BUILDING

SHEET TITLE:

WOOD FOUNDATION PLAN
24x40
(100 PSF)

TAVARES ASSOCIATES
DESIGN/BUILD/ENGINEERING/PROJECT MGMT
LICENSED ARCHITECT JACK F. SHIVELY III No. C-33467 01-31-17 RENEWAL DATE STATE OF CALIFORNIA
REGISTERED PROFESSIONAL ENGINEER DAVID D. FRISCH No. S3380 STRUCTURAL STATE OF CALIFORNIA
RSTS 14217

06/15/15

ARCHITECT OF RECORD SUBMISSION DATE

FILE #: 15-8
IDENTIFICATION STAMP
DIV. OF THE STATE ARCHITECT
OFFICE OF REGULATION SERVICES
03-118270
AC FLS SS OL
DATE NOV - 8 2017
TRACKING #: 63221-290

PROJECT SPECIFIC STATE AGENCY APPROVAL

IDENTIFICATION STAMP
DIV. OF THE STATE ARCHITECT
04 116284
ACS FLS SS RAF
DATE MAY 18 2017

ORIGINAL PC STATE AGENCY APPROVAL

PRE-CHECK (PC) DOCUMENT ONLY. A SEPARATE PROJECT APPLICATION FOR CONSTRUCTION IS REQUIRED

IDENTIFICATION STAMP
DIV. OF THE STATE ARCHITECT
OFFICE OF REGULATION SERVICES
PC 04-114102
AC FLS SS RAF
DATE AUG - 4 2015

REVISIONS

1
2
3
4
5
6
7
8

SILVER CREEK INDUSTRIES
24' x 40' PC - 2:12 PITCH

PROJECT NO:
DRAWN BY:
SCALE: AS NOTED
DATE: 01-30-15

P.C. SHEET NUMBER

F-0.03

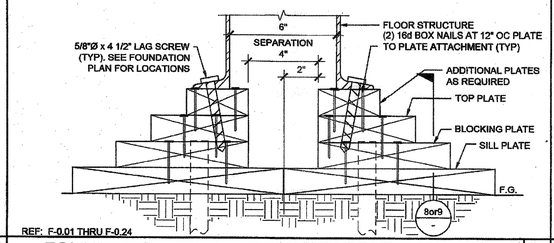

REF: F-0.01 THRU F-0.24

16 FOUNDATION AT ADJACENT BUILDING SCALE : 3"=1'-0"

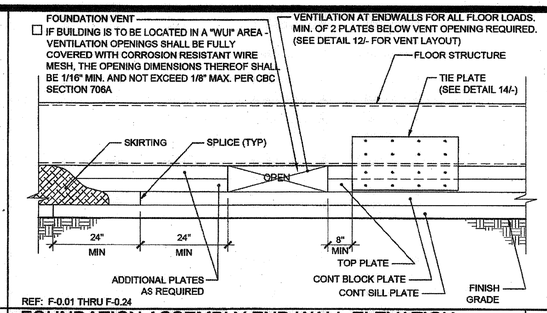

REF: F-0.01 THRU F-0.24

11 FOUNDATION ASSEMBLY END WALL ELEVATION SCALE : 1 1/2"=1'-0"

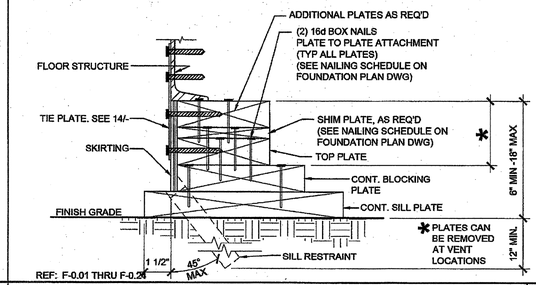

REF: F-0.01 THRU F-0.24

1 FOUNDATION AT END WALL SCALE : 3"=1'-0"

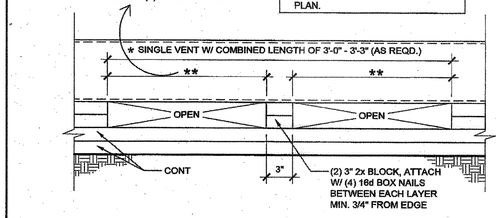

17 END WALL VENT SCALE : 1 1/2"=1'-0"

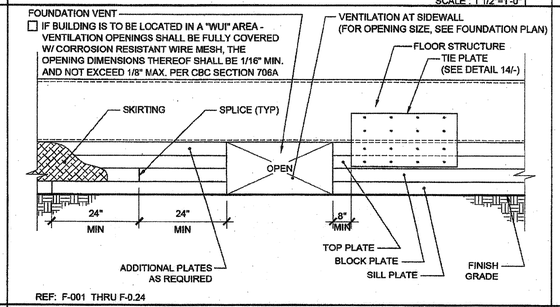

REF: F-001 THRU F-0.24

12 FOUNDATION ASSEMBLY SIDEWALL ELEVATION SCALE : 1 1/2"=1'-0"

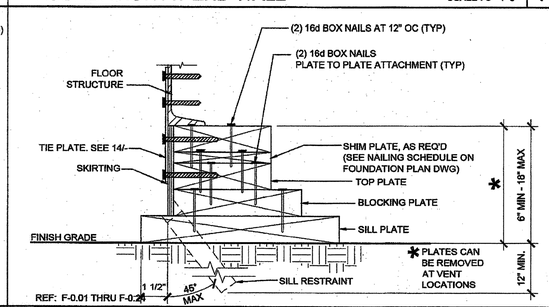

REF: F-0.01 THRU F-0.24

2 FOUNDATION AT SIDE WALL SCALE : 3"=1'-0"

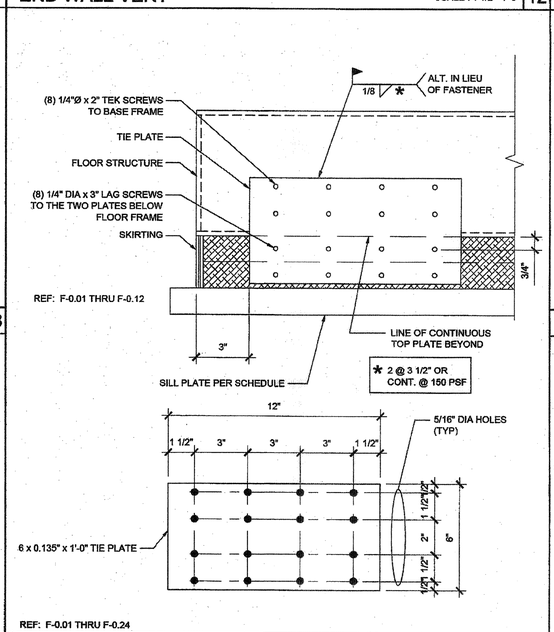

REF: F-0.01 THRU F-0.12

18 TIE PLATE SCALE : 3"=1'-0"

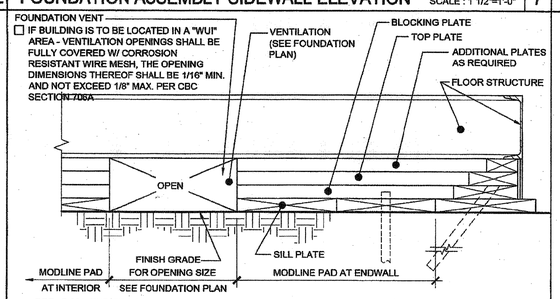

REF: F-001 THRU F-0.24

8 FOUNDATION AT MODLINE & SEPARATION SCALE : 1 1/2"=1'-0"

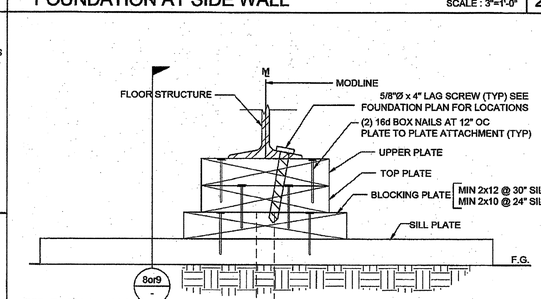

REF: F-0.01 THRU F-0.24

3 FOUNDATION AT MODLINE SCALE : 3"=1'-0"

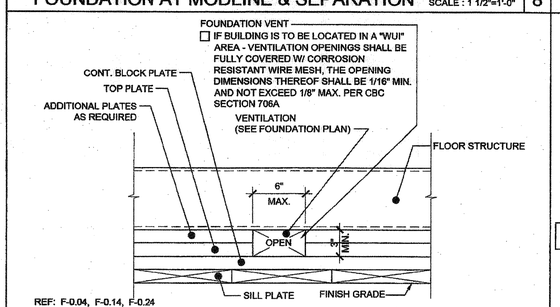

REF: F-0.04, F-0.14, F-0.24

9 VENT ELEV. AT MODLINE & SEP FOR 150 PSF SCALE : 3"=1'-0"

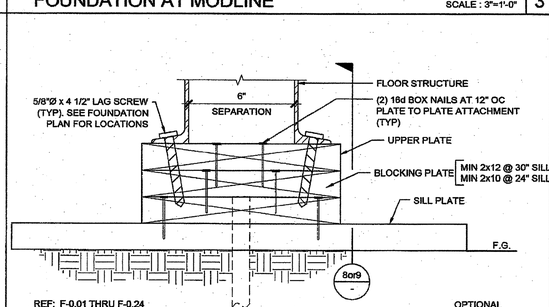

REF: F-0.01 THRU F-0.24 OPTIONAL

4 FOUNDATION AT ADJACENT BUILDING SCALE : 3"=1'-0"

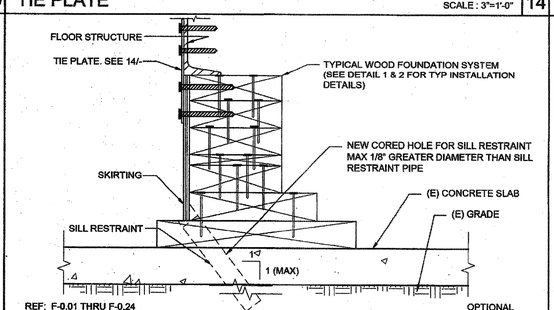

REF: F-0.01 THRU F-0.24 OPTIONAL

20 FOUNDATION ANCHORAGE AT CONCRETE PAD SCALE : 3"=1'-0"

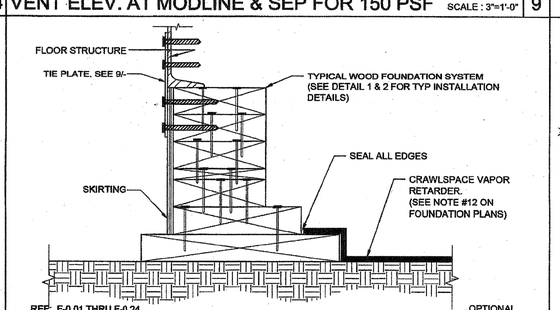

REF: F-0.01 THRU F-0.24 OPTIONAL

15 CRAWLSPACE VAPOR RETARDER SCALE : 3"=1'-0"

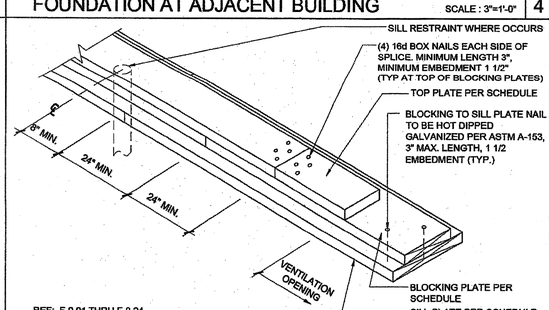

REF: F-0.01 THRU F-0.24

5 FOUNDATION SPLICE SCALE : NTS

THESE DRAWINGS AND ALL MATERIAL CONTAINED HEREIN ARE THE PROPERTY OF SILVERCREEK INDUSTRIES, INC (SCI Inc) AND SHALL NOT BE REPRODUCED, COPIED OR OTHERWISE DISPOSED OF DIRECTLY OR INDIRECTLY AND SHALL NOT BE USED IN WHOLE OR IN PART TO ASSIST IN THE MAKING OF OR FOR THE PURPOSE OF FURNISHING ANY INFORMATION FOR THE MAKING OF DRAWINGS, PRINTS, APPARATUS OR PARTS THEREOF WITHOUT THE FULL KNOWLEDGE AND WRITTEN CONSENT OF SCI Inc.
ALL PATENTABLE MATERIAL CONTAINED HEREIN AND ORIGINATING WITH SCI Inc SHALL BE THE PROPERTY OF SCI Inc

SILVER CREEK INDUSTRIES, INC.
"BUILDING FOR THE NEXT GENERATION"
SILVER CREEK
2830 BARRETT AVE PERRIS, CALIFORNIA 92571
PHONE: 951-943-5393 FAX: 951-943-2211

PROJECT NAME:

24x40 STOCKPILE OFFICE BUILDING

SHEET TITLE:

FOUNDATION DETAILS
WOOD

TAVARES & ASSOCIATES
DESIGN & CONSULTING PROJECT MGT
18972 W. BERNARDO DR. SUITE 220
San Diego, CA 92127 858.442.9964
WWW.TAVARES.COM
LICENSED ARCHITECT JACK F. SHIVELY III No. C-33467 01-31-17 RENEWAL DATE STATE OF CALIFORNIA
REGISTERED PROFESSIONAL ENGINEER JAMES D. FRISH No. S3380 STRUCTURAL STATE OF CALIFORNIA
RSTA 14217
06/15/15

ARCHITECT OF RECORD SUBMISSION DATE
FILE #: 15-6
IDENTIFICATION STAMP DIV. OF THE STATE ARCHITECT OFFICE OF REGULATION SERVICES
03-118270
AC FLS SS
DATE NOV - 9 2017
TRACKING #: 63221-290

PROJECT SPECIFIC STATE AGENCY APPROVAL
IDENTIFICATION STAMP DIV. OF THE STATE ARCHITECT
04 116284
AC FLS SS RAF
DATE MAY 18 2017

ORIGINAL PC STATE AGENCY APPROVAL
PRE-CHECK (PC) DOCUMENT
A SEPARATE PROJECT SPECIFIC SUBMITTAL FOR CONSTRUCTION IS REQUIRED
IDENTIFICATION STAMP DIV. OF THE STATE ARCHITECT OFFICE OF REGULATION SERVICES
PC 04-114102
AC FLS SS RAF
DATE AUG - 4 2015

REVISIONS
1
2
3
4
5
6
7
8

SILVER CREEK INDUSTRIES
24' x 40' PC - 2:12 PITCH

PROJECT NO:	
DRAWN BY:	
SCALE:	AS NOTED
DATE:	01-30-15
P.C. SHEET NUMBER	F-0.50

STRUCTURAL SPECIFICATIONS

FOUNDATIONS:

GEOTECHNICAL INVESTIGATIONS SHALL BE CONDUCTED IN ACCORDANCE WITH SECTIONS 1803A.3 THROUGH 1803A.8. EXCEPTIONS, 1) GEOTECHNICAL REPORTS ARE NOT REQUIRED FOR ONE-STORY, WOOD-FRAME AND LIGHT-STEEL-FRAME BUILDINGS OF TYPE II OR TYPE V CONSTRUCTION AND 4,000 SQUARE FEET OR LESS IN FLOOR AREA, NOT LOCATED WITHIN EARTHQUAKE FAULT ZONES OR SEISMIC HAZARD ZONES AS SHOWN IN THE MOST RECENTLY PUBLISHED MAPS FROM THE CALIFORNIA GEOLOGICAL SURVEY (CGS) OR IN SEISMIC HAZARD ZONES AS DEFINED IN THE SAFETY ELEMENT OF THE LOCAL GENERAL PLAN, 2) A PREVIOUS REPORT FOR A SPECIFIC SITE MAY BE RESUBMITTED, PROVIDED THAT A REEVALUATION IS MADE AND THE REPORT IS FOUND TO BE CURRENTLY APPROPRIATE. ALLOWABLE FOUNDATION AND LATERAL SOIL PRESSURE VALUES MAY BE DETERMINED FROM TABLE 1806A.2 PER CBC SECTION 1803A.2

CONCRETE

PROVIDE NECESSARY SHIMS ON FOOTINGS NOT LEVEL WITHIN THE 1/2" ALLOWABLE TOLERANCE. THE DISTRICT SHALL PROVIDE CLEAR AND UNOBSTRUCTED ACCESS TO THE SITE. THE DISTRICT IS RESPONSIBLE FOR ALL SURVEYING, STAKING THE BUILDING CORNERS, SETTING THE FINISH FLOOR ELEVATION, RIGGING, CRANING, EXCAVATION, SPOIL REMOVAL, AND BACKFILL.

THE FOUNDATION AND THE METHOD OF FASTENING THE UNITS SHALL BE AS SHOWN ON DRAWINGS WHERE APPLICABLE. HIGH STRENGTH GROUT SHALL BE EMBECO 885 NON-SHRINK, METALLIC AGGREGATE GROUT OR A DSA APPROVED EQUAL.

THE DESIGN OF CONRETE FOUNDATIONS WILL BE AS FOLLOWS:

1. FURNISH AND INSTALL ALL CONCRETE WORK AS SHOWN ON THE DRAWINGS AND AS SPECIFIED.
2. EXCEPT AS MODIFIED BY THE REQUIREMENTS SPECIFIED HEREIN AND / OR THE DETAILS ON THE DRAWINGS, ALL WORK INCLUDED IN THIS SECTION SHALL CONFORM TO THE APPLICABLE PROVISIONS OF CODES AND STANDARDS.
   a) ALL WORK AND MATERIALS SHALL CONFORM TO TITLE 24, CALIFORNIA CODE OF REGULATIONS, CHAPTER 19A.
   b) AMERICAN CONCRETE INSTITUTE (ACI): BUILDING CODE REQUIREMENTS FOR REINFORCED CONCRETE, ACI318-11.
   c) SOCIETY FOR TESTING AND MATERIALS (ASTM): THE SPECIFICATIONS AND STANDARDS HEREINAFTER REFERENCED TO SHALL BE OF THE LATEST EDITION.
3. CONCRETE FOUNDATION TESTS AND INSPECTIONS SHALL BE THE RESPONSIBILITY OF THE ARCHITECT AND OR INSPECTOR.
4. DESIGN MIXES SHALL BE AS SPECIFIED IN TITLE 24. CONCRETE STRENGTH AT 28 DAYS SHALL BE AS FOLLOWS: (UNLESS REQUIRED OTHERWISE PER ACI 318-11 TABLE 4.3.1).
   CONCRETE COMPRESSIVE STRENGTH F'C= 3500 PSI
   WATER-CEMENT RATIO SHALL NOT EXCEED 0.60 BY WEIGHT
   PORTLAND CEMENT TYPE I
   NORMAL WEIGHT
5. FORMS SHALL BE SUBSTANTIAL, PLUMB, LEVEL, SQUARE, TRUE TO LINE, WATER TIGHT AND ACCURATE TO THE DIMENSIONS REQUIRED.
6. THE ARCHITECT SHALL APPROVE LOCATION OF:
   a) OPENINGS FOR MECHANICAL AND ELECTRICAL: PROVIDE FOR OPENINGS IN THE CONCRETE WITH THE TRADE(S) INVOLVED AND INSTALL SLEEVES AS MAY BE REQUIRED.
   b) OPENINGS FOR VENT WELLS FOR UNDER FLOOR VENTILATION: PROVIDE FOR ALL OPENINGS IN THE CONCRETE WITH THE TRADE(S) INVOLVED. INSTALL ALL SLEEVES AS MAY BE REQUIRED.
7. VARIANCE IN CONCRETE SLAB SURFACE SHALL BE NO MORE THAN 1/16" IN 10 FEET
8. ALL CEMENT SHALL BE TYPE I OR II PER ASTM C-150. (UNLESS REQUIRED OTHERWISE PER ACI 318-11 TABLE 4.3.1)
9. WATER CONTENT SHALL NOT EXCEED 7 1/4 GALLONS PER SACK OF CEMENT (UNLESS REQUIRED OTHERWISE PER ACI 318-11 TABLE 4.3.1)
10. AGGREGATE SHALL BE 3/4" TO 1 1/2" MAXIMUM SIZE BUT NOT MORE THAN 3/4" OF MINIMUM CLEAR BAR SPACING
11. ANCHOR BOLTS, DOWELS, REINFORCING STEEL, AND EMBEDDED ITEMS ARE TO BE SECURELY TIED IN PLACE BEFORE CONCRETE IS POURED "WET SETTING" IS NOT ALLOWED.
12. REFER TO ARCHITECTURAL, ELECTRICAL, AND MECHANICAL PLANS FOR SLEEVES, INSERTS CURBS, DEPRESSED AREAS, AND ETC.
13. CONCRETE MIX REQUIRED: CONTRACTOR SHALL SUBMIT CONCRETE MIX DESIGN FOR FOOTINGS TO PROFESSIONAL OF RECORD FOR APPROVAL PRIOR TO POURING CONCRETE.

1705A.3.3. WAIVER OF BATCH PLAN INSPECTION.

A. WHEN BATCH PLANT INSPECTION IS WAIVED, THE FOLLOWING REQUIREMENTS SHALL APPLY:

1. QUALIFIED TECHNICIAN OF THE TESTING LABORATORY SHALL CHECK THE FIRST BATCHING AT THE START OF DAY.
2. LICENSED WEIGHMASTER TO POSITIVELY IDENTIFY MATERIALS AS TO QUANTITY AND CERTIFY TO EACH LOAD BY A TICKET.
3. BATCH TICKETS, INCLUDING ACTUAL MATERIAL QUANTITIES AND WEIGHTS SHALL ACCOMPANY THE LOAD AND SHALL BE TRANSMITTED TO THE INSPECTOR OF RECORD BY A TRUCK DRIVER WITH LOAD IDENTIFIED THEREON. THE LOAD SHALL NOT BE PLACED WITHOUT A BATCH TICKET IDENTIFYING THE MIX. THE INSPECTOR WILL KEEP A DAILY RECORD OF PLACEMENTS, IDENTIFYING EACH TRUCK , IT'S LOAD, TIME OF RECEIPT AND APPROXIMATE LOCATION OF DEPOSIT IN THE STRUCTURE AND WILL TRANSMIT A COPY OF THE DAILY RECORD TO THE ENFORCEMENT AGENCY.

REINFORCING STEEL:

1. MATERIAL: ALL REINFORCING STEEL SHALL BE BILLET STEEL PER ASTM A-615 MIN. GRADE 40. EXCEPT #3 ANCHOR REINFORCEMENT SHALL BE GRADE 60.
2. SPLICES: ALL SPLICES SHALL BE LAPPED A MINIMUM 48" #5 BARS AND 30" #4 BARS UNLESS OTHERWISE DETAILED.
3. REINFORCING FABRICATION AND PLACEMENT: FABRICATION AND PLACING OF REINFORCING SHALL CONFORM TO THE "CODE OF STANDARD PRACTICE AND SPECIFICATIONS FOR PLACING REINFORCEMENT OF THE CONCRETE REINFORCING STEEL INSTITUTE".
4. MINIMUM COVERAGE: ALL REINFORCING SHALL HAVE THE FOLLOWING MINIMUM COVERAGE WITH CONCRETE:

LOCATION	AMOUNT
FORMED EARTH	2"
CONCRETE CAST AGAINST AND PERMANENTLY EXPOSED TO EARTH	3"
WALL-EXPOSED FACE	
#5 OR SMALLER	2"
#6 OR LARGER	2"
WALL-UNEXPOSED FACE	3/4"

STRUCTURAL STEEL:

1. ALL STRUCTURAL STEEL OTHER THAN TUBE AND PIPE COLUMNS SHALL CONFORM TO ASTM A-36.
2. TUBE COLUMNS SHALL CONFORM TO ASTM A500 GRADE B, OR A1085
3. PIPE COLUMNS SHALL CONFORM TO ASTM A501 OR ASTM A53, TYPE E OR S, GRADE B. OR A1085
4. TUBE STEEL USED FOR RAMPS & STAIRS SHALL CONFORM TO ASTM A513 GRADE MT1020 OR BETTER

STEEL FRAME BUILDING/STEEL FRAME CONSTRUCTION SHALL MEET THE MINIMUM DESIGN REQUIREMENTS OF STUD SPACING, ETC. PER LATEST EDITION OF 2013 CALIFORNIA BUILDING CODE. ALL WORK AND MATERIALS SHALL CONFORM TO THE "SPECIFICATION FOR THE DESIGN, FABRICATION, AND ERECTION OF STRUCTURAL STEEL FOR BUILDINGS" AND "CODE OF STANDARD PRACTICE FOR STEEL BUILDINGS AND BRIDGES," AMERICAN INSTITUTE OF STEEL CONSTRUCTION: TITLE 24, CCR, AND UNIFORM BUILDING CODE. STRUCTURAL STEEL SHALL BE MADE EITHER THE OPEN-HEARTH OR ELECTRIC FURNACE PROCESS ONLY AND SHALL CONFORM TO THE "SPECIFICATION FOR STRUCTURAL STEEL" ASTM DESIGNATION A36, CURRENT EDITION.

ROOF FRAMING, FLOOR FRAMING, AND WALL FRAMING SHALL BE PER MANUFACTURER'S PC PLANS AND PER APPLICABLE CODES.

ALL STRUCTURAL MEMBERS BELOW THE SUB-FLOOR, IE, GIRDERS, JOISTS, HEADERS, BLOCKING, SHALL BE STEEL. MINIMUM JOIST SPACING SHALL BE PER PLAN.

ALL WORK SHALL CONFORM TO THE REQUIREMENTS OF THE AISC STANDARD SPECIFICATIONS, THE APPLICABLE REGULATORY AGENCY AND THE AMERICAN IRON AND STEEL INSTITUTE SPECIFICATIONS FOR DESIGN OR LIGHT GAUGE STEEL STRUCTURAL MEMBERS. WELDING: SHALL COMPLY WITH THE PERTINENT PROVISIONS OF THE APPLICABLE REGULATORY AGENCY. ALL WELDING SHALL BE DONE BY OPERATORS WHO ARE QUALIFIED AS PRESCRIBED IN THE "QUALIFICATION PROCEDURE" OF THE AMERICAN WELDING SOCIETY TO PERFORM THE TYPE OF WORK REQUIRED.

STEEL SHALL BE COATED WITH ONE SHOP COAT OF MANUFACTURER'S STANDARD CHASSIS PAINT OR EQUAL.

BOLTS:

ALL COMMON BOLTS AND ANCHOR BOLTS SHALL CONFORM TO ASTM A-307.

STRUCTURAL WELDING: SPECIAL INSPECTOR REQUIRED

GENERAL: DURING THE WELDING OF ANY MEMBER OR CONNECTION THAT IS DESIGNED TO RESIST LOADS AND FORCES REQUIRED BY THIS CODE.

ALL WELDS USED IN PRIMARY MEMBERS AND CONNECTIONS IN THE LATERAL FORCE-RESISTING SYSTEMS SHALL BE MADE WITH A FILLER METAL THAT HAS A MINIMUM CHARPY V-NOTCH TOUGHNESS OF 20 FT/LBS AT MINUS 20 DEGREES F AS DETERMINED BY AWS CLASSIFICATION OR MANUFACTURER CERTIFICATION.

ALL STRUCTURAL WELDING SHALL BE BY "ELECTRIC ARC PROCESS" PER AWS STANDARD CODE FOR ARC AND GAS WELDING IN BUILDING CONSTRUCTION. ALL LIGHT GAUGE STEEL (SHEET STEEL) SHALL BE WELDED PER AWS D1.3. ALL REINFORCING STEEL SHALL BE WELDED WITH LOW HYDROGEN RODS PER AWS D1.4, OR REINFORCING STEEL SHALL CONFORM TO ASTM A-706. ALL SHOP WELDED MUST BE PERFORMED BY "APPROVED" WELDERS IN A SHOP OF A LICENSED FABRICATOR. ALL FIELD WELDING SHALL BE PERFORMED BY "APPROVED" WELDERS. ELECTRODES SHALL BE E70XX FOR STRUCTURAL STEEL AND REBAR AND SHALL BE E60XX FOR LIGHT GAUGE STEEL. * (SEE OPTIONAL PROCESS)

THE SPECIAL INSPECTOR NEED NOT BE CONTINUOUSLY PRESENT DURING WELDING OF THE FOLLOWING ITEMS, PROVIDED THE MATERIALS, WELDING PROCEDURES AND QUALIFICATION OF WELDERS ARE VERIFIED PRIOR TO THE START OF WORK: PERIODIC INSPECTIONS ARE MADE OF WORK IN PROGRESS, AND A VISUAL INSPECTION OF ALL WELDS IS MADE PRIOR TO SHIPMENT OF SHOP WELDING.

a) FLOOR AND ROOF DECK WELDING.
b) WELDED STUDS WHEN USED FOR STRUCTURAL DIAPHRAGM OR COMPOSITE SYSTEMS.
c) WELDED SHEET STEEL FOR COLD-FRAMED STEEL FRAMING MEMBERS SUCH AS STUDS AND JOISTS WHICH ARE NOT PART OF AN ORDINARY MOMENT FRAME.
d) SINGLE PASS FILLET WELDS NOT EXCEEDING 5/16".

MATERIAL SHALL BE IDENTIFIED BY MARKING OR STAMPING THE I.D. NUMBER ON STRUCTURAL STEEL COMPONENTS BY LICENSED FABRICATION SHOP.

ALL BUTT, BEVEL, GROOVE, VEE, U AND J WELDS SHALL BE PREQUALIFIED COMPLETE PENETRATION WELDS.

FILLER MATERIAL FOR WELDING: SHIELDED METAL-ARC: AWS A5.1 OR 15.5 E70XX ELECTRODES.

HOLES IN STRUCTURAL STEEL SHALL NOT BE PERMITTED UNLESS SPECIFICALLY DETAILED ON THE STRUCTURAL DRAWINGS.

STRUCTURAL STEEL SHALL BE THOROUGHLY CLEANED BY SCRAPING OR WIRE BRUSHING AND SHOP PRIMED.

ALL STEEL WORK, INCLUDING WELD AND CONNECTIONS EXCEPT WHERE ENTIRELY ENCASED IN CONCRETE SHALL BE GIVEN ONE COAT OF ACCEPTABLE METAL PROTECTION WELL WORKED INTO JOINTS AND OPEN SPACES.

* OPTIONAL USE OF: FCAW PROCESS: E71T-8 FOR STRUCTURAL/REBAR (MEETS ALL CHARPY REQUIREMENTS) E71T-11 FOR METAL DECKING

COLD-FORMED STEEL FRAMING:
STRUCTURAL LIGHT GAUGE STEEL FRAMING AND ACCESSORIES SHALL BE FABRICATED IN ACCORDANCE WITH ASTM A-1011/A GRADE AS LISTED BELOW, SEE PLAN FOR MINIMUM YIELD.
MATERIAL THICKNESS 0.120" OR LESS: ASTM A-1011/A GRADE 33 (UNO)
MATERIAL THICKNESS 0.135" : ASTM A-1011/A GRADE 40

SHEET STEEL DESIGNATION THICKNESS (INCHES)	MINIMUM DELIVERED THICKNESS (INCHES)
0.018	0.017
0.030	0.029
0.036	0.034
0.048	0.046
0.060	0.057
0.075	0.071
0.105	0.100
0.120	0.114
0.135	0.128

LIGHT GAUGE STEEL STUDS AND TRACKS SHALL COMPLY WITH ASTM A-1003 STRUCTURAL GRADE 33 TYPE H

ALL WELDING SHALL BE IN CONFORMANCE WITH AWS D1.3, "STRUCTURAL WELDING CODE - SHEET STEEL". QUALIFICATION OF WELDERS SHALL BE IN ACCORDANCE WITH AWS D1.1, CHAPTER 5, PART C, "WELDER QUALIFICATIONS".

BOLTS, SCREWS, ETC. EXPOSED TO THE EXTERIOR SHALL BE GALVANIZED

MACHINE BOLTS USED SHALL CONFORM TO SPECIFICATIONS OF ASTM STANDARD A-307.

NDT:
CJP GROOVE WELD NDT
ULTRASONIC TESTING SHALL BE PERFORMED ON 100 PERCENT OF CJP GROOVE WELDS IN MATERIALS 5/16 in. (8mm) THICK OR GREATER. ULTRASONIC TESTING IN MATERIALS LESS THAN 5/16 in. (8 mm) THICK IS NOT REQUIRED. MAGNETIC PARTICLE TESTING SHALL BE PERFORMED ON 25 PERCENT OF ALL BEAM-TO-COLUMN CJP GROOVE WELDS.

WOOD:

FRAMING: ALL FRAMING LUMBER SHALL BE GRADE MARKED BY AN APPROVED GRADING AGENCY AND SHALL BE OF THE FOLLOWING MINIMUM GRADES OR BETTER, PER WCLB RULES #16.
PLATES AND BLOCKING - STANDARD GRADE OR BETTER
STUDS AND HEADER = DF #2 OR BETTER

SHEATHING:
AMERICAN PLYWOOD ASSOCIATION PS-1-07. EACH SHEET SHALL BE GRADE MARKED BY THE AMERICAN PLYWOOD ASSOCIATION, AND SHALL CONFORM TO THE REQUIREMENTS OF STANDARD GRADE GROUP 1 OR BETTER GRADE STAMPED AND IDENTIFIED UNDER THE PROCEDURES AND QUALIFICATIONS SET FORTH BY PS-1-07.

1. PLYWOOD SUB FLOOR: 1 1/8" T&G UNBLOCKED PLYWOOD. PROVIDE SEAMLESS WOVEN POLYFLEX BOTTOM BOARD FOR MOISTURE PROTECTION
2. OPTIONAL PLYWOOD ROOF DECK: APA RATED 3/4" T&G OSB OR EQUIVALENT RATED SHEATHING WITH APPROVAL FROM DSA
3. EXTERIOR WALL SIDING:
   i. STANDARD: 5/8" DURATEMP OR 5/8" SMART PANEL
   ii. OPTIONAL: 5/8" MDO
   iii. OPTIONAL: 1/2" OSB OR CDX PLYWOOD FOR PLASTER/STUCCO FINISH
4. EXTERIOR WALL SIDING ATTACHMENT:
   FASTENERS USED FOR THE ATTACHMENT OF EXTERIOR WALL COVERINGS SHALL BE HOT-DIPPED GALVANIZED, MECHANICALLY DEPOSITED ZINC-COATED, STAINLESS STEEL, SILICON BRONZE OR COPPER PER CBC SECTION 2304.9.1.1

TREATED WOOD:

ALL WOOD INCLUDING WOOD SHEATHING IN CONTACT WITH CONCRETE OR MASONRY AND LOCATED LESS THAN 18" FROM EXPOSED EARTH SHALL BE "PRESERVATIVE TREATED" OR SHALL BE "NATURALLY DURABLE" MATERIAL PER (CBC SECTION 2304.11.2.2).

1. ALL ROUGH LUMBER SHALL BE DF #2 OR BETTER.
2. WOOD FASTENERS OTHER THAN SCREWS.
   ALL POWER DRIVEN FASTENERS SHALL BE HILTI FASTENERS ICC# ESR-1663 OR RAMSET POWER DRIVEN FASTENERS (ICC# ESR-1799), OR SIMPSON POWER DRIVEN FASTENERS ICC #ESR-2138, OR OTHER EQUIVALENT PRODUCTS WITH ICC REPORTS AND APPROVED BY DSA.
3. FASTENERS, INCLUDING NUTS AND WASHERS, IN CONTACT WITH PRESERVATIVE-TREATED WOOD SHALL BE OF HOT-DIPPED ZINC-COATED GALVANIZED STEEL, STAINLESS STEEL, SILICON BRONZE OR COPPER PER CBC 2304.9.5.1

CONTINUOUS INSPECTION:

PROJECT INSPECTOR TO PROVIDE CONTINUOUS FIELD INSPECTION.

IN-PLANT INSPECTOR SHALL PROVIDE CONTINUOUS INSPECTION IN-PLANT

METALS, STRUCTURAL, AND MISC. STEEL:

CONTRACTOR SHALL PROVIDE ALL LABOR, MATERIAL, AND SERVICES REQUIRED FOR STRUCTURES AND MISCELLANEOUS STEEL AS SPECIFIED AND INDICATED IN THE DRAWINGS.

MATERIALS: ALL STRUCTURAL STEEL IDENTIFICATION SHALL CONFORM WITH TITLE 24, SECTION 2203A.1.

STEEL SHAPES: ALL STRUCTURAL STEEL SHAPES SHALL CONFORM TO THE REQUIREMENTS OF ASTM A-36, OPEN HEARTH OR ELECTRIC FURNACE ONLY.

STEEL TUBES: ALL STRUCTURAL TUBES SHALL CONFORM TO REQUIREMENTS OF ASTM A-500 GRADE B (fy=46 KSI), ASTM A53 OR A1085 TYPICAL.

STEEL SHEETS: STEEL SHEETS FOR LIGHT GAUGE STEEL SECTIONS SHALL CONFORM TO THE REQUIREMENTS OF ASTM A-1011/A, GRADE 40 U.O.N. SHEET METAL GRAVEL STOPS AND FLASHINGS SHALL BE MINIMUM 0.030 THICKNESS AND SHALL BE GALVANIZED.

ERECTION:
ALL STRUCTURAL STEEL SHALL BE ERECTED TRUE, STRAIGHT, PLUMB AND TO ITS DESIGNED LOCATION. TEMPORARY BRACING OR SHORING SHALL BE INSTALLED WHEREVER NECESSARY TO TAKE CARE OF LOADS TO WHICH THE STRUCTURE MAY BE SUBJECTED, INCLUDING ERECTION EQUIPMENT AND THE OPERATION OF SAME. CONNECTIONS SHALL BE ADEQUATE TO WITHSTAND STRESSES TO WHICH THEY ARE NORMALLY SUBJECTED. CONNECTIONS SHALL BE STEEL, EXCEPT AS OTHERWISE NOTED. FIELD CONNECTIONS SHALL BE BOLTED OR WELDED AS SHOWN ON THE DRAWINGS.

SHOP PAINT:

* EXPOSED STEEL COATED WITH ONE SHOP COAT OF PRIMER.
* NON-EXPOSED STEEL COATED WITH ON SHOP COAT OF PRIMER.
* ALL SURFACES THOROUGHLY CLEANED BY EFFECTIVE MEANS PRIOR TO APPLICATION OF SHOP COATS.

POWER DRIVEN FASTENERS FOR SILL PLATE, WOOD NAILERS TO STEEL COLUMNS, AND SHEET METAL TO STRUCTURAL STEEL:

ALL POWER DRIVEN FASTENERS SHALL BE HILTI FASTENERS ICC# ESR-1663, OR RAMSET POWER DRIVEN FASTENERS (ICC# ESR-1799), OR SIMPSON POWER DRIVEN FASTENERS ICC #ESR-2138, OR OTHER EQUIVALENT PRODUCTS WITH ICC REPORTS AND APPROVED BY DSA.

WOOD ROUGH CARPENTRY:

THE CONTRACTOR SHALL TAKE ALL PRECAUTIONS AND STEPS NECESSARY TO PROTECT ALL COMPLETED, SEMI-COMPLETED, AND TEMPORARY WORK FROM COMMENCEMENT OF PROJECT TO COMPLETE, SEMI-COMPLETION OF SAME ANY PORTION OF THE WORK DAMAGED OR DISFIGURED SHALL BE SATISFACTORILY REPAIRED OR REPLACED AND THE WORK AS A WHOLE LEFT WITHOUT BLEMISH AT FINAL ACCEPTANCE. THE CONTRACTOR SHALL BE RESPONSIBLE FOR TAKING ALL NECESSARY MEASUREMENTS AT THE BUILDING, THE ACCURATE FITTING OF ALL WORK AND PROPER ACCOMMODATION OF OTHER TRADES.

DESCRIPTION OF WORK:
THIS SECTION INCLUDES FURNISHING OF ALL LABOR, MATERIAL, TOOLS, EQUIPMENT, TRANSPORTATION, AND FACILITIES TO COMPLETE ROUGH CARPENTRY AS INDICATED IN THE DRAWINGS AND AS SPECIFIED HEREIN.

WORKMANSHIP:
ALL WORKMANSHIP SHALL BE IN ACCORDANCE WITH THE BEST PRACTICE, SHALL BE ACCURATE AS TO MEASUREMENT AND SHALL BE CAREFULLY DONE. PLYWOOD SHEATHING SUBFLOOR SHALL PROVIDE A SMOOTH UNIFORM SURFACE CAPABLE PROPERLY ACCEPTING A CARPET FINISH.

ROOF DIAPHRAGM:
3/4" T&G APA RATED SHEATHING - STRUCTURE 1 EXPOSURE 1
SPAN RATING 48/24 MIN.
FASTEN TO SHEET METAL SUPPORTS W/ #8 x 1 1/4" LG. SELF DRILLING SELF-TAPPING PHILLIPS FLAT-HEAD ZINC COATED TEKS SCREWS (ICC ESR-1976) OR 0.145 PACFAST PREFERRED FASTENERS (ICC ESR-2961) AT 4" OC AT BOUNDARIES, 6" OC AT EDGES, AND 12" OC FIELD NAILS. MIN. 3/8" EDGE DISTANCE FOR FASTENERS TO PLYWOOD EDGE PER CBC SECTION 2306.2. NOTE: 0.145 PNEUMATIC FASTENERS OPTION IS NOT ALLOWED ON PARAPET APPLICATIONS (PARAPET HEIGHT) HIGHER THAN 18" OR AT STRUCTURAL STEEL. IE. TRUSSES.

FLOOR DIAPHRAGM:
1 1/8" PLYWOOD - STURD-I-FLOOR
EXTERIOR - TONGUE AND GROOVE EDGES
SPAN RATING: 48"
FASTEN TO SHEET METAL SUPPORTS W/ #8 - 24 x 1 3/4 LG. SELF-DRILLING, SELF-TAPPING PHILLIPS FLAT-HEAD ZINC COATED TEKS SCREWS (ICC ESR-1976) OR 0.145 PACFAST PREFERRED FASTENERS (ICC ESR-2961) AT 6" OC AT BOUNDARIES, AT 6" OC AT EDGES, AND 12" OC AT INTERMEDIATE SUPPORTS. MIN. 3/8" EDGE DISTANCE FOR FASTENERS TO PLYWOOD EDGE PER CBC SECTION 2306.2. 0.145 PNEUMATIC FASTENERS (PACFAST PREFERED FASTENERS) OPTION IS NOT ALLOWED APPLICATIONS AT STRUCTURAL STEEL IE FLOOR CHANNELS OR 150 PSF FLOOR LOAD OPTION.

CONCRETE FLOOR DATA: LIGHTWEIGHT CONCRETE FLOOR
STRENGTH: 3500 PSI or 4000 PSI
TYPE: I OR II
DENSITY: 110 PCF - MAX

DIMENSION LUMBER ATTACHMENT TO STEEL FRAMING:
2 x STUDS AT CORNER STEEL COLUMNS (NAILING STUD)
USE: #10 - 24 x 2 1/2" LG. SELF-DRILLING SELF-TAPPING PHILLIPS FLAT-HEAD WITH WASHER ZINC COATED TEK SCREWS AT 24" O.C.

REFERENCE STANDARDS NOTES:

INTENT OF DRAWINGS AND SPECIFICATIONS IS TO CONSTRUCT THE BUILDING IN ACCORDANCE WITH THE STATE OF CALIFORNIA, CALIFORNIA CODE OF REGULATIONS, PART 1, 2, 3, 4, 5, 6, 9, AND 12, SUB-CHAPTER 1. CALIFORNIA BUILDING CODE, 2013 EDITION, MANUAL OF STEEL CONSTRUCTION, (AISC) 14TH EDITION, AMERICAN WELDING SOCIETY, STRUCTURAL WELDING CODE, AWS D1.1, AMERICAN INSTITUTE OF TIMBER CONSTRUCTION STANDARD, (AITC) 109 ARCHITECTURAL SHEET METAL MANUAL, AIA FILE NO. 12-L (SMACNA) LATEST ADOPTED EDITION UNLESS OTHERWISE NOTED.

WORKMANSHIP:
WORKMANSHIP AND MATERIALS SHALL BE SUCH THAT BUILDING WILL BE WEATHERTIGHT AND WATERTIGHT.

INSPECTIONS:
A PROJECT INSPECTOR EMPLOYED BY THE DISTRICT (OWNER) AND APPROVED BY THE DIVISION OF THE STATE ARCHITECT SHALL PROVIDE CONTINUOUS INSPECTION OF THE WORK THE DUTIES OF THE INSPECTOR ARE DEFINED IN SECTION 4-342, PART 1, TITLE 24, CCR.

CHANGES:
CHANGES TO THE APPROVED DRAWINGS AND SPECIFICATIONS SHALL BE MADE BY AN ADDENDA OR A CONSTRUCTION CHANGE DOCUMENT (CCD) APPROVED BY THE DIVISION OF THE STATE ARCHITECT AS REQUIRED BY SECTION 4-338, PART 1, TITLE 24, CCR.

NAILING NOTES:
1. ALL NAILS SHALL BE COMMON UNLESS OTHERWISE NOTED
2. MACHINE APPLIED 16d FASTENERS SHALL HAVE AN EMBEDMENT OF NOT LESS THAN 1 1/2" INTO THE SECOND MEMBER, AND SHALL BE NOT LESS THAN 3" IN OVERALL LENGTH. THE ABOVE NAILS SHALL ALSO BE ACCEPTABLE FOR HAND NAILING, PROVIDED THE REQUIRED EMBEDMENT IS MAINTAINED.

CONNECTION AND FASTENERS:
ALL CONNECTIONS AND FASTENERS AS STATED ON THESE DRAWINGS CAN BE SUBSTITUTED BY AN EQUIVALENT PRODUCT WITH ICC REPORTS AND APPROVAL BY DSA.

CONNECTION OF LAG SCREWS:
AS REQUIRED PER ANSI / AF&PA NDS-2012, LAG SCREWS MUST BE INSTALLED INTO A PRE-DRILLED PILOT HOLE WITH A STANDARD WASHER AND TURNED WITH A WRENCH. DO NOT DRIVE IN WITH A HAMMER. OVER-TORQUING CAN SIGNIFICANTLY REDUCE THE LATERAL RESISTANCE OF THE LAG SCREW AND SHOULD BE AVOIDED.

FASTENING SCHEDULE

CBC - TABLE 2304.9.1

CONNECTION	FASTENING[a,m]	LOCATION
1. JOIST TO SILL OR GIRDER	3 - 8d COMMON 3 - 3" x 0.131" NAILS	TOENAIL
2. BRIDGING TO JOIST	2 - 8d COMMON (2 1/2" x .131") 2 - 3" x 0.31" NAILS	TOENAIL EACH END
3. 1" x 6" SUBFLOOR OR LESS TO EACH JOIST	2 - 8d COMMON (2 1/2" x .131")	FACE NAIL
4. WIDER THAN 1" x 6" SUBFLOOR TO EACH JOIST	3 - 8d COMMON (2 1/2" x .131")	FACE NAIL
5. 2" SUBFLOOR TO JOIST OR GIRDER	2 - 16d COMMON	BLIND AND FACE NAIL
6. SOLE PLATE TO JOIST OR BLOCKING	16d(3 1/2" x .135") AT 16" O.C. 3"x0.131" NAILS AT 8" O.C.	TYPICAL FACE NAIL
SOLE PLATE TO JOIST OR BLKING AT BRACED WALL PANEL	3 - 16d(3 1/2" x .135") AT 16" O.C. 4 - 3"x0.131" NAILS AT 16" O.C.	BRACED WALL PANELS
7. TOP PLATE TO STUD	2 - 16d COMMON (3 1/2" x 0.162") 3 - 3"x0.031" NAILS	END NAIL
8. STUD TO SOLE PLATE	4 - 8d COMMON (2 1/2"x0.131") 4 - 3"x0.131" NAILS	TOENAIL
	2 - 16d COMMON (3 1/2"x0.162") 3 - 3"x0.131" NAILS	END NAIL
9. DOUBLE STUDS	16d (3 1/2"x0.135") AT 24" O.C. 3"x0.131" NAILS AT 12" O.C.	FACE NAIL
10. DOUBLE TOP PLATES	16d (3 1/2"x0.135") AT 16" O.C. 3"x0.131" NAILS AT 12" O.C.	TYPICAL FACE NAIL
DOUBLE TOP PLATES	8 - 16d COMMON (3 1/2"x0.162") 12 - 3"x0.131" NAILS	LAP SPLICE
11. BLOCKING BETWEEN JOISTS OR RAFTERS TO TOP PLATE	3 - 8d COMMON (2 1/2"x0.131") 3 - 3"x0.131" NAILS	TOENAIL
12. RIM JOIST TO TOP PLATE	8d (2 1/2"x0.131") AT 6" O.C. 3"x0.131" NAIL AT 6" O.C.	TOENAIL
13. TOP PLATES, LAPS, AND INTERSECTIONS	2 - 16d COMMON (3 1/2"x0.162") 3 - 3"x0.131" NAILS	FACE NAIL
14. CONTINUOUS HEADER, TWO PIECES	16d COMMON (3 1/2"x0.162")	16" OC ALONG EDGE
15. CEILING JOISTS TO PLATE	3 - 8d COMMON (2 1/2"x0.131") 5 - 3"x0.131" NAILS	TOENAIL
16. CONTINUOUS HEADER TO STUD	4 - 8d COMMON (2 1/2"x0.131")	TOENAIL
17. CEILING JOISTS, LAPS OVER PARTITIONS (SEE SECTION 2308.10.4.1, TABLE 2308.10.4.1)	3 - 16d COMMON (3 1/2"x0.162") MIN TABLE 2308.10.4.1 4 - 3"x0.131" NAILS	FACE NAIL
18. CEILING JOISTS TO PARALLEL RAFTERS (SEE SECTION 2308.10.4.1, TABLE 2308.10.4.1)	3 - 16d COMMON (3 1/2"x0.162") MIN TABLE 2308.10.4.1 4 - 3"x0.131" NAILS	FACE NAIL
19. RAFTER TO PLATE (SEE SECTION 2308.10.1, TABLE 2308.10.1	3 - 8d COMMON (2 1/2"x0.131") 3 - 3"x0.131" NAILS	FACE NAIL
20. 1" DIAGONAL BRACE TO EACH STUD AND PLATE	2 - 8d COMMON (2 1/2"x0.131") 2 - 3"x0.131" NAILS	FACE NAIL
21. 1" x 8" SHEATHING TO EACH BEARING	3 - 8d COMMON (2 1/2"x0.131")	FACE NAIL
22. WIDER THAN 1" x 8" SHEATHING TO EACH BEARING	3 - 8d COMMON (2 1/2"x0.131")	FACE NAIL
23. BUILT-UP CORNER STUDS	16d COMMON (3 1/2"x0.162") 3"x0.131" NAILS	24" O.C. 16" O.C.
24. BUILT-UP GIRDER AND BEAMS	20d COMMON (4"x0.192")32" O.C 3"x0.131" NAIL AT 24" O.C	FACE NAIL AT TOP AND BOTTOM STAGGERED ON OPPOSITE SIDES
	2 - 20d COMMON (4" x0.192") 3 - 3"x0.131" NAILS	FACE NAIL AT ENDS AND AT EACH SPLICE
25. 2" PLANKS	16d COMMON (3 1/2"x0.162")	AT EACH BEARING
26. COLLAR TIE TO RAFTER	3 - 10d COMMON (3"x0.148") 4 - 3"x0.131" NAILS	FACE NAIL
27. JACK RAFTER TO HIP	3 - 10d COMMON (3"x0.148") 4 - 3"x0.131" NAILS	TOE NAIL
	2 - 16d COMMON (3 1/2"x0.162") 3 - 3"x0.131" NAILS	FACE NAIL
28. ROOF RAFTERS TO 2-BY RIDGE BEAM	2 - 16d COMMON (3 1/2"x0.162") 3 - 3"x0.131" NAILS	TOE NAIL
	2 - 16d COMMON (3 1/2"x0.162") 3 - 3"x0.131" NAILS	FACE NAIL
29. JOIST TO BAND JOIST	3 - 16d COMMON (3 1/2"x0.162") 4 - 3"x0.131" NAILS	FACE NAIL
30. LEDGER STRIP	3 - 16d COMMON (3 1/2"x0.162") 4 - 3"x0.131" NAILS	FACE NAIL AT EACH JOIST
31. WOOD STRUCTURAL PANELS AND PARTICLEBOARD[b] SUBFLOOR,

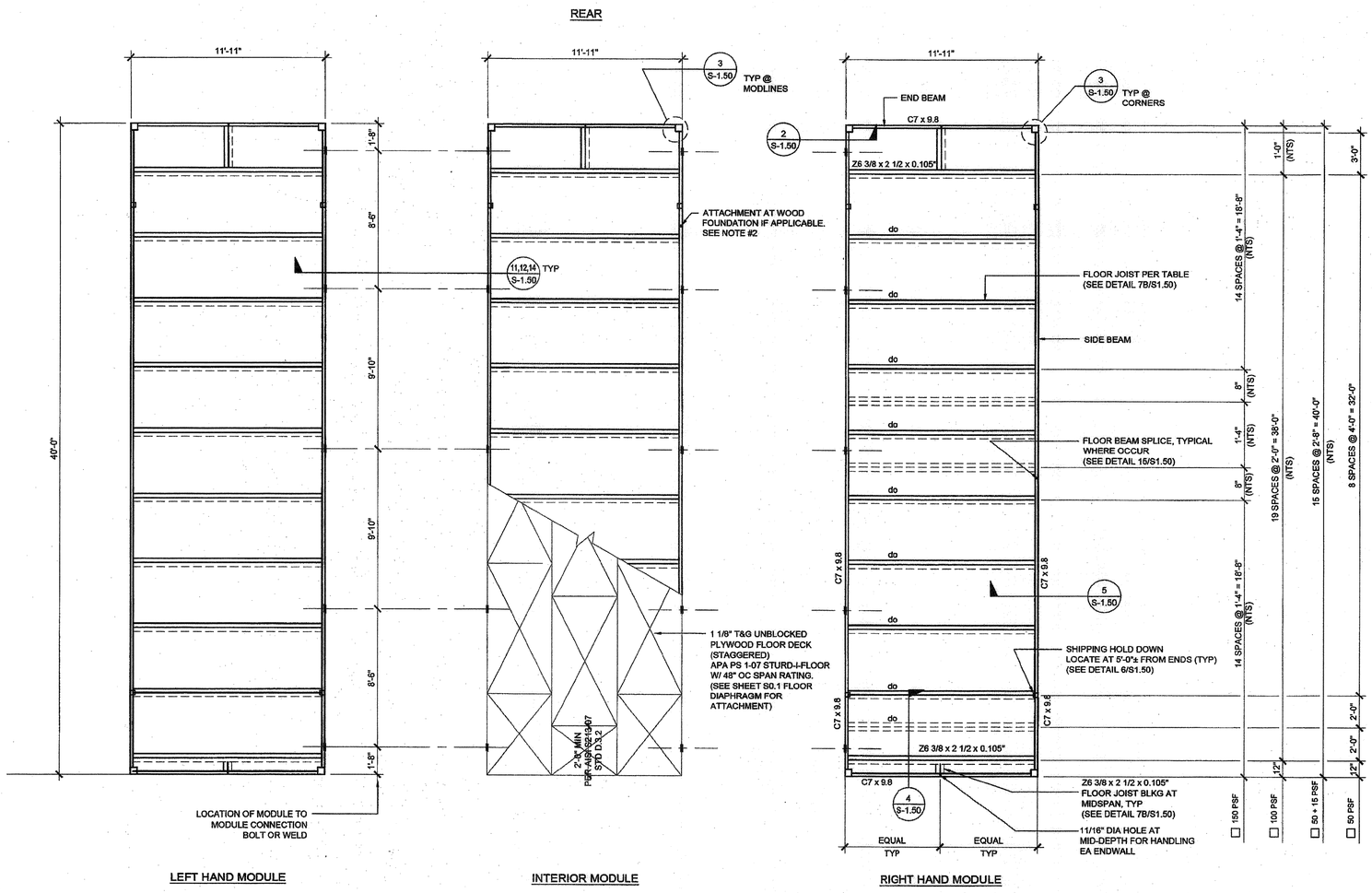

NOTES:

1. FOR FLOOR BLOCKING SEE DETAILS
   4,7B / S-1.50 (STD),
   4,7A / S-1.50 (ALT)
2. FOR BUILDINGS ON WOOD FOUNDATION SYSTEMS, PROVIDE 11/16" DIA. HOLE AT BOTTOM FLANGE OF FLOOR BEAM FOR LAG SCREW ATTACHMENT TO FOUNDATION PLATES BELOW. FOR EXACT HOLE LOCATIONS, SEE FOUNDATION PLAN.

FLOOR JOIST TABLE

	LIVE LOAD PSF	JOIST SPACING
☐	50	48"
☐	50 + 15	32"
☑	100	24"
☐	150	16"

FLOOR FRAMING PLAN

SCALE: 1/4" = 1' - 0" | 1

THESE DRAWINGS AND ALL MATERIAL CONTAINED HEREIN ARE THE PROPERTY OF SILVERCREEK INDUSTRIES, INC (SCI Inc) AND SHALL NOT BE REPRODUCED, COPIED OR OTHERWISE DISPOSED OF DIRECTLY OR INDIRECTLY AND SHALL NOT BE USED IN WHOLE OR IN PART TO ASSIST IN THE MAKING OF OR FOR THE PURPOSE OF FURNISHING ANY INFORMATION FOR THE MAKING OF DRAWINGS, PRINTS, APPARATUS OR PARTS THEREOF WITHOUT THE FULL KNOWLEDGE AND WRITTEN CONSENT OF SCI Inc.
ALL PATENTABLE MATERIAL CONTAINED HEREIN AND ORIGINATING WITH SCI Inc SHALL BE THE PROPERTY OF SCI Inc

SILVER CREEK INDUSTRIES, INC.
"BUILDING FOR THE NEXT GENERATION"
SILVER CREEK
2830 BARRETT AVE PERRIS, CALIFORNIA 92571
PHONE: 951-943-5393 FAX: 951-943-2211

PROJECT NAME:

24x40 STOCKPILE OFFICE BUILDING

SHEET TITLE:

FLOOR FRAMING PLAN WOOD FLOOR

TAVARES ASSOCIATES
DESIGN/CONSULTING/PROJECT MGT
18825 W. BERNARDO DR. SUITE 203
SAN DIEGO, CA 92128 858-485-9294
WWW.MRTAVARES.COM
LICENSED ARCHITECT MARK R. TAVARES C-33467 REN 01-31-2017 STATE OF CALIFORNIA
REGISTERED PROFESSIONAL ENGINEER DAVID D. PARSON No. S3380 STRUCTURAL STATE OF CALIFORNIA
RSTB 14217
06/15/15

ARCHITECT OF RECORD SUBMISSION DATE

FILE #: 15-6
IDENTIFICATION STAMP
DIV. OF THE STATE ARCHITECT
OFFICE OF REGULATION SERVICES
03-118270
AC___ FLS___ SS CL
DATE NOV - 8 2017
TRACKING #: 63221-290

PROJECT SPECIFIC STATE AGENCY APPROVAL
IDENTIFICATION STAMP
DIV. OF THE STATE ARCHITECT
04 116284 1.
ACS ___ FLS A SS RAF
DATE MAY 18 2017

ORIGINAL PC STATE AGENCY APPROVAL
PRE-CHECK (PC) DOCUMENT CCR2-5013 CBC
A SEPARATE PROJECT APPLICATION FOR CONSTRUCTION IS REQUIRED
IDENTIFICATION STAMP
DIV. OF THE STATE ARCHITECT
OFFICE OF REGULATION SERVICES
PC 04-114102
AC___ FLS___ SS RAF
DATE AUG - 4 2015

REVISIONS
1
2
3
4
5
6
7
8

SILVER CREEK INDUSTRIES
24' x 40' PC - 2:12 PITCH

PROJECT NO:	
DRAWN BY:	
SCALE:	AS NOTED
DATE:	01-30-15

P.C. SHEET NUMBER

S-1.01

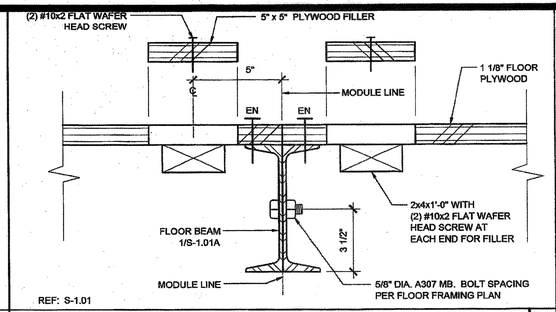

REF: S-1.01

16 MODULE LINE - BOLTED CONNECTION SCALE : 3" = 1'-0"

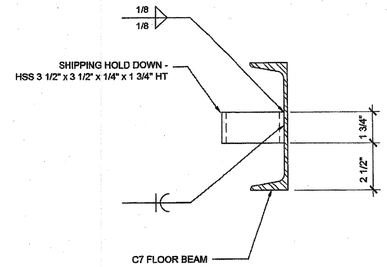

REF: S-1.01

11 SHIPPING HOLD DOWN DETAIL SCALE : 3"=1'-0"

6

1

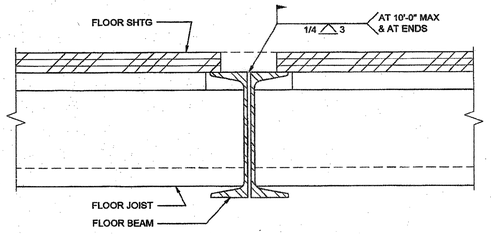

REF: S-1.01

17 MODULE LINE CONNECTION (OPTION 1) SCALE : 3"=1'-0"

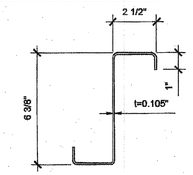

STANDARD JOIST

t=0.105"
Sx : 2.4465 IN^3 MIN
Ix : 7.798 IN^4
Fy : 33 KSI
Zx : 3.00 IN^3

ASTM A-1011, GRADE 33

REF: S-1.01

12 FLOOR JOIST SCALE : 3" = 1'-0"

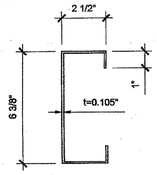

BLOCKING

t=0.105"
Sx : 2.4465 IN^3 MIN
Ix : 7.798 IN^4 MIN
Fy : 33 KSI
Zx : 3.00 IN^3

ASTM A-1011, GRADE 33

7B BLOCKING SCALE : 3" = 1'-0"

7A

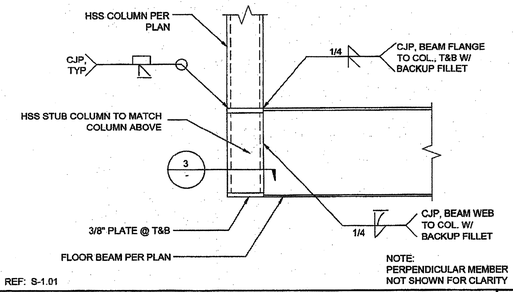

REF: S-1.01

FLOOR BEAM TO COLUMN CONNECTION SCALE : 1 1/2" = 1'-0"

2

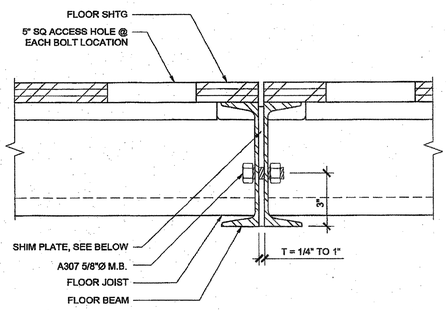

18

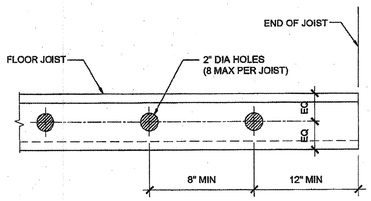

FLOOR JOIST HOLES (OPTIONAL) SCALE : 1/8" = 1'-0"

8

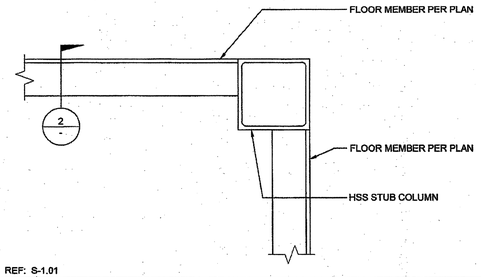

REF: S-1.01

CORNER CONNECTION SCALE : 3" = 1'-0"

3

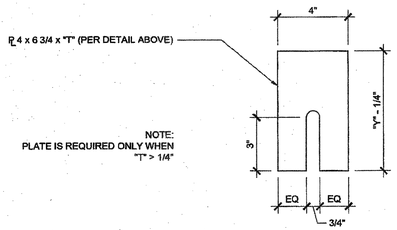

REF: S-1.01

19 MODULE LINE CONNECTION (OPTION 2) SCALE : 3"=1'-0"

14

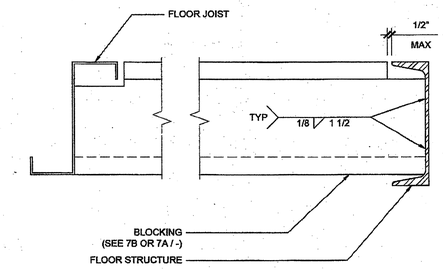

REF: S-1.01

BLOCKING TO END BEAM SCALE : 3" = 1'-0"

4

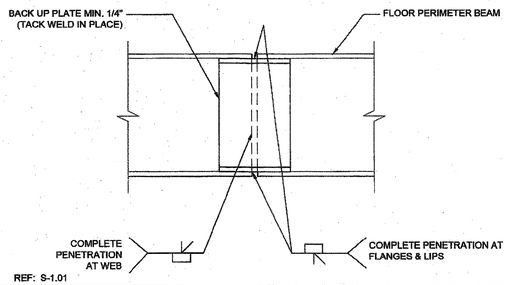

REF: S-1.01

20 FLOOR BEAM SPLICE SCALE : 3" = 1'-0"

15

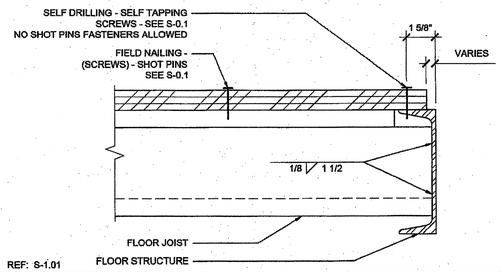

REF: S-1.01

10 JOIST TO SIDE BEAM SCALE : 3" = 1'-0"

5

THESE DRAWINGS AND ALL MATERIAL CONTAINED HEREIN ARE THE PROPERTY OF SILVERCREEK INDUSTRIES, INC (SCI Inc) AND SHALL NOT BE REPRODUCED, COPIED OR OTHERWISE DISPOSED OF DIRECTLY OR INDIRECTLY AND SHALL NOT BE USED IN WHOLE OR IN PART TO ASSIST IN THE MAKING OF OR FOR THE PURPOSE OF FURNISHING ANY INFORMATION FOR THE MAKING OF DRAWINGS, PRINTS, APPARATUS OR PARTS THEREOF WITHOUT THE FULL KNOWLEDGE AND WRITTEN CONSENT OF SCI Inc.
ALL PATENTABLE MATERIAL CONTAINED HEREIN AND ORIGINATING WITH SCI Inc SHALL BE THE PROPERTY OF SCI Inc

SILVER CREEK INDUSTRIES, INC.
"BUILDING FOR THE NEXT GENERATION"
SILVER CREEK
2830 BARRETT AVE PERRIS, CALIFORNIA 92571
PHONE: 951-943-5393 FAX: 951-943-2211

PROJECT NAME:

24x40 STOCKPILE OFFICE BUILDING

SHEET TITLE:

FLOOR FRAMING DETAILS

WOOD FLOOR

TAVARES ASSOCIATES
DESIGN/CONSULTING/PROJECT MGT
16870 W. BERNARDO RD., SUITE 220
SAN DIEGO, CA 92127 858.592.9414
www.tavares.com

LICENSED ARCHITECT JACK TAVARES III C-33467 REN 01-31-2017 STATE OF CALIFORNIA

REGISTERED PROFESSIONAL ENGINEER M.D. FRISCH No. S3380 STRUCTURAL STATE OF CALIFORNIA

RSTB 14217

06/15/15

ARCHITECT OF RECORD SUBMISSION DATE

FILE #:15-6
IDENTIFICATION STAMP
DIV. OF THE STATE ARCHITECT
OFFICE OF REGULATION SERVICES
03-118270
AC. FLS. SS
DATE NOV - 8 2017
TRACKING #: 63221-290

PROJECT SPECIFIC STATE AGENCY APPROVAL

IDENTIFICATION STAMP
DIV. OF THE STATE ARCHITECT
04 116284
ACS FLS SS RAF
DATE MAY 18 2017

ORIGINAL PC STATE AGENCY APPROVAL

PRE-CHECK (PC) DOCUMENT
CODE 2013 CBC
A SEPARATE PERMIT APPLICATION FOR CONSTRUCTION IS REQUIRED

IDENTIFICATION STAMP
DIV. OF THE STATE ARCHITECT
OFFICE OF REGULATION SERVICES
PC 04-114102
AC. FLS SS RAF
DATE AUG - 4 2015

REVISIONS

1
2
3
4
5
6
7
8

SILVER CREEK INDUSTRIES
24' x 40' PC - 2:12 PITCH

PROJECT NO:	
DRAWN BY:	
SCALE:	AS NOTED
DATE:	01-30-15
P.C. SHEET NUMBER	S-1.50

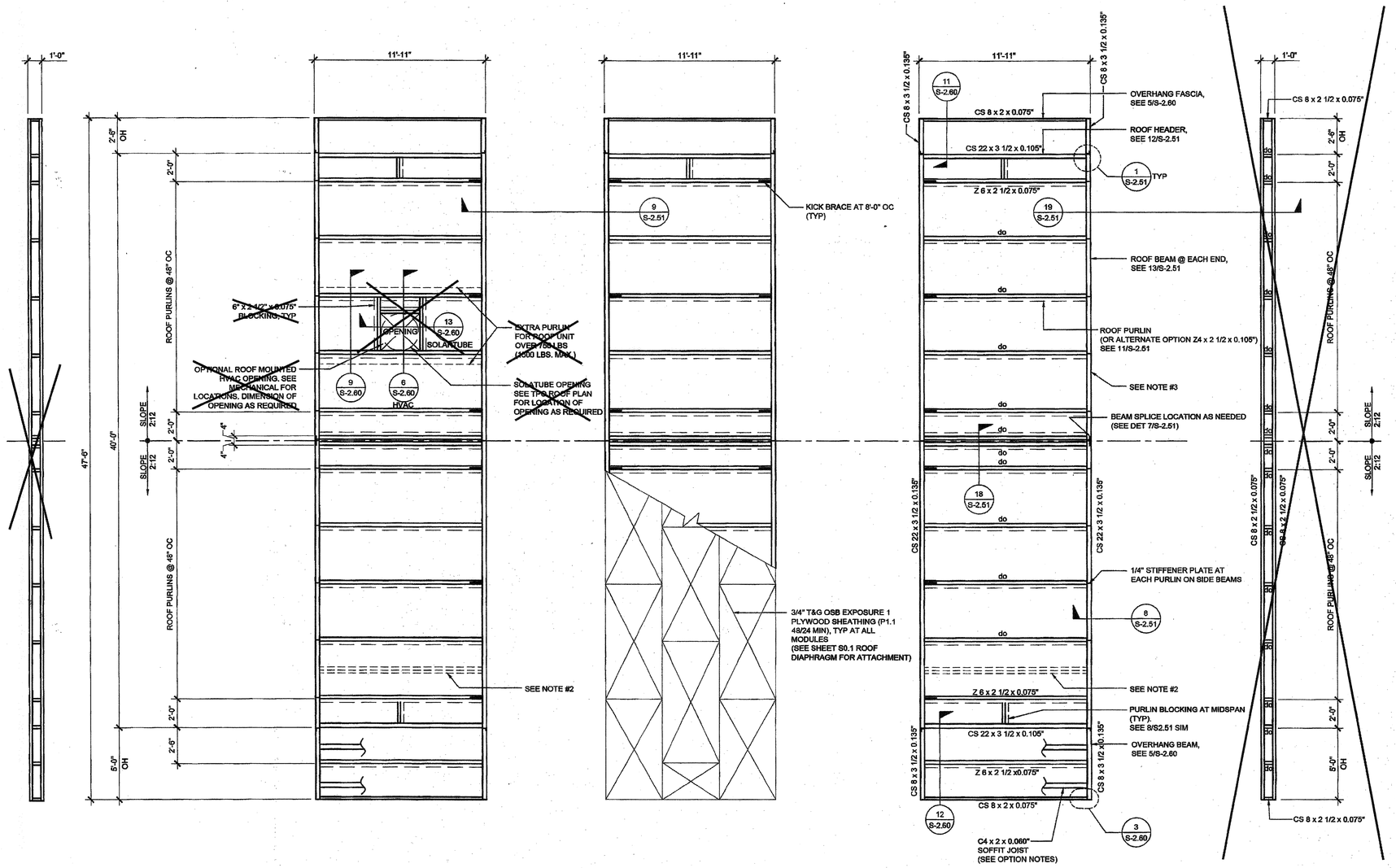
1'-0"
11'-11"
11'-11"
11'-11"
1'-0"
2'-8" OH
2'-0"
ROOF PURLINS @ 48" OC
47'-6"
40'-0"
SLOPE 2:12
2'-0"
2'-0"
4"
4"
6" x 2 1/2" x 0.075" BLOCKING, TYP
OPENING
13 S-2.60 SOLATUBE
EXTRA PURLIN FOR ROOF UNIT OVER 750 LBS (1000 LBS. MAX.)
OPTIONAL ROOF MOUNTED HVAC OPENING. SEE MECHANICAL FOR LOCATIONS. DIMENSION OF OPENING AS REQUIRED
9 S-2.60
6 S-2.60 HVAC
SOLATUBE OPENING SEE TYP. ROOF PLAN FOR LOCATION OF OPENING AS REQUIRED
2'-0"
2'-6"
5'-0" OH
SEE NOTE #2
9 S-2.51
KICK BRACE AT 8'-0" OC (TYP)
3/4" T&G OSB EXPOSURE 1 PLYWOOD SHEATHING (P1.1 48/24 MIN), TYP AT ALL MODULES (SEE SHEET S0.1 ROOF DIAPHRAGM FOR ATTACHMENT)
11 S-2.60
CS 8 x 3 1/2 x 0.135"
CS 8 x 2 x 0.075"
CS 22 x 3 1/2 x 0.105"
Z 6 x 2 1/2 x 0.075"
19 S-2.51
do
do
do

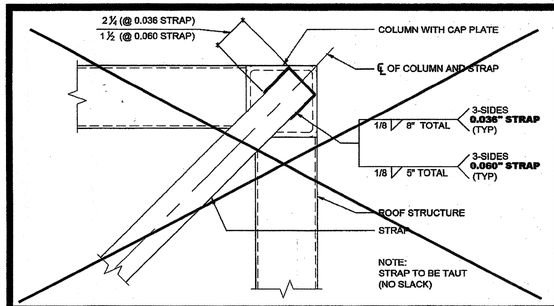

ROOF BRACING STRAP @ END WALL — SCALE : 3"=1'-0" — 16

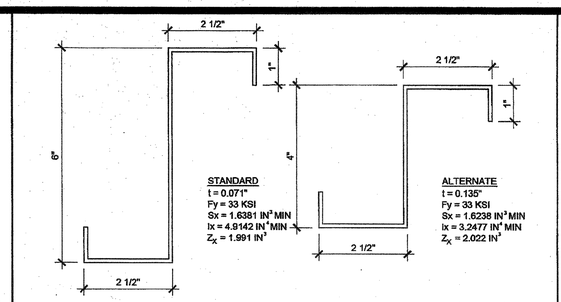

ROOF PURLIN — SCALE : 6"=1'-0" — 11

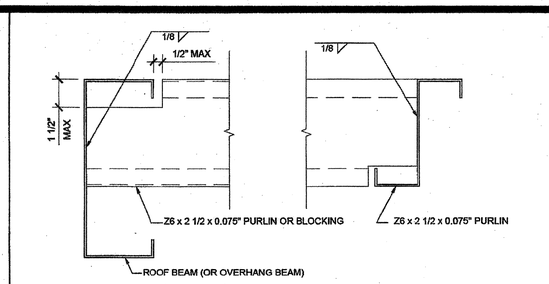

TYPICAL PURLIN CONNECTION DETAIL — SCALE : 3" = 1'-0" — 6

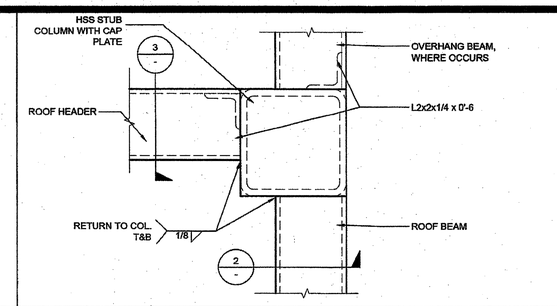

COLUMN AT ROOF - PLAN — SCALE : 3" = 1'-0" — 1

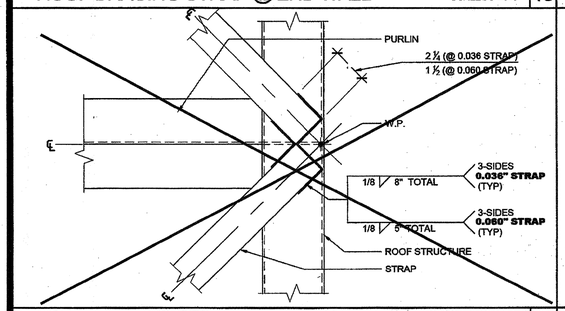

ROOF BRACING STRAP @ SIDE WALL — SCALE : 3"=1'-0" — 17

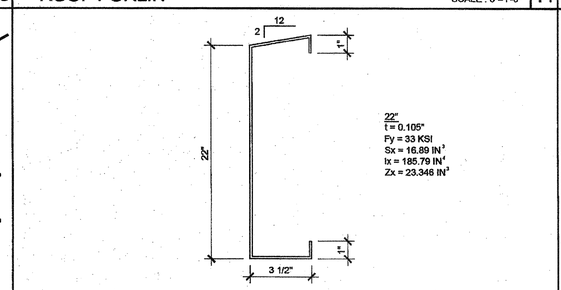

ROOF HEADER — SCALE : NTS — 12

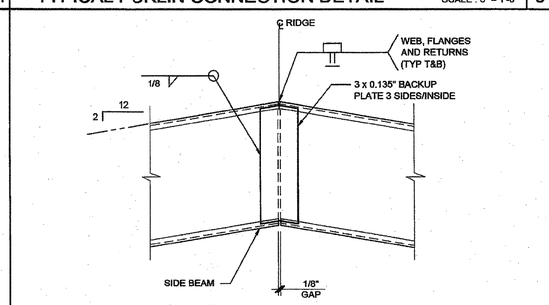

BEAM SPLICE — SCALE: 3" = 1'-0" — 7

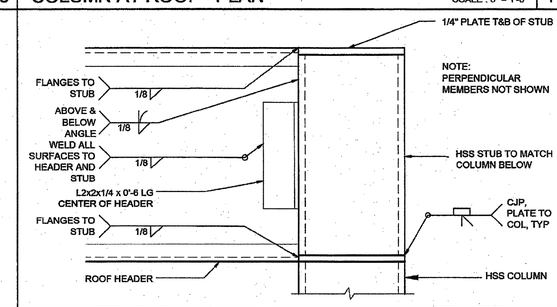

COLUMN AT ROOF - SECTION — SCALE : 3" = 1'-0" — 2

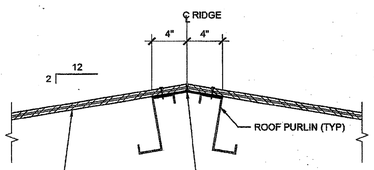

PURLINS AT RIDGE — SCALE : 1 1/2"=1'-0" — 18

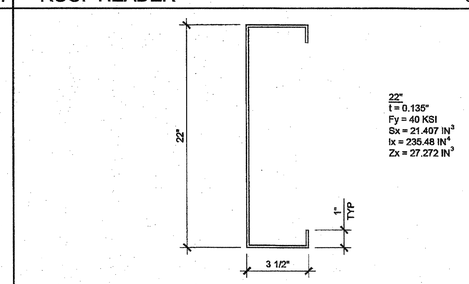

ROOF BEAM — SCALE : NTS — 13

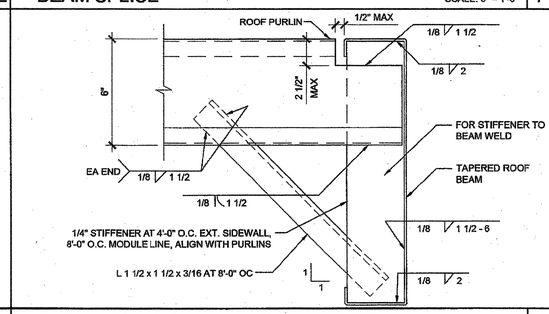

PURLIN TO ROOF BEAM @ STIFFENER — SCALE : 3"=1'-0" — 8

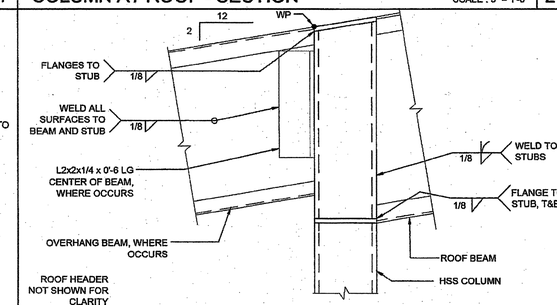

COLUMN AT ROOF OVERHANG — SCALE : 3" = 1'-0" — 3

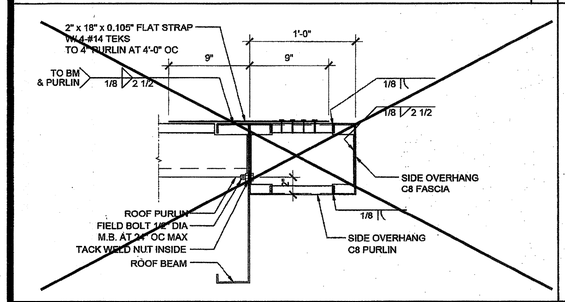

SIDE OVERHANG — SCALE : 1 1/2" = 1'-0" — 19

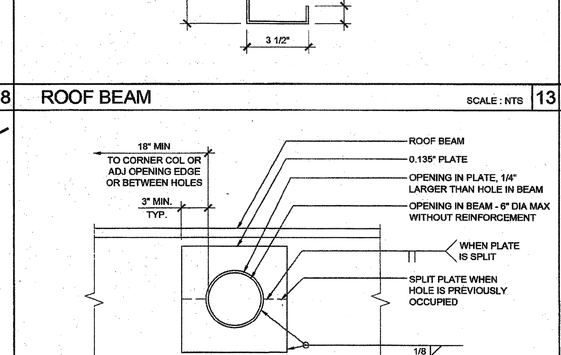

SIDEWALL BEAM PENETRATION — SCALE : 1 1/2"=1'-0" — 14

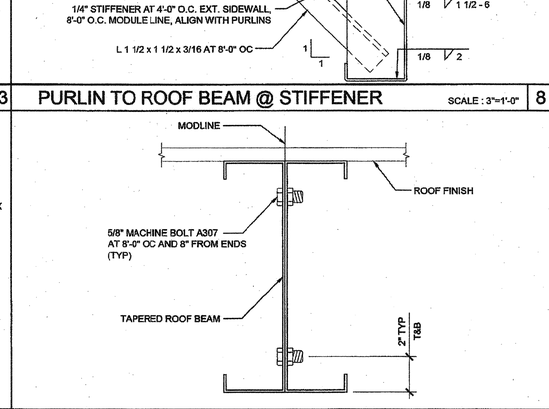

MODULE CONNECTION AT ROOF (OPTION) — SCALE : 3"=1'-0" — 9

NOT USED — 4

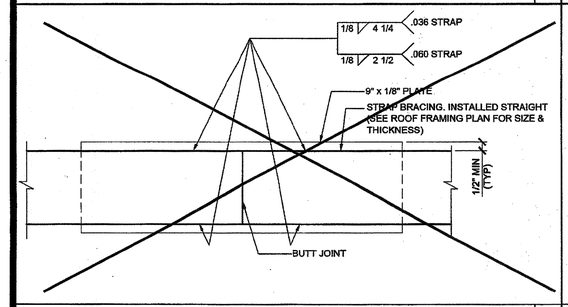

STRAP SPLICE DETAIL — SCALE : 6" = 1'-0" — 20

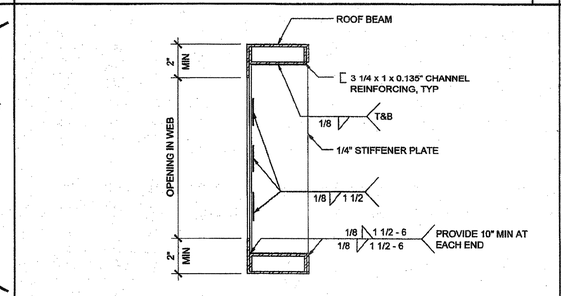

WEB OPENING AT HEADER — SCALE : 3" = 1'-0" — 15

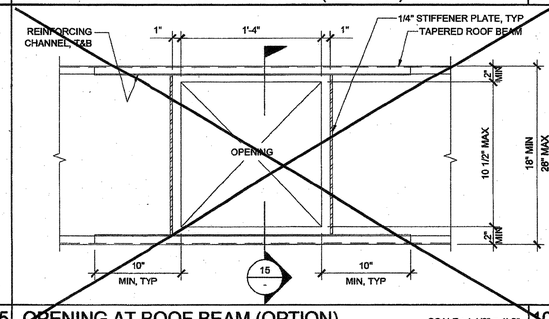

OPENING AT ROOF BEAM (OPTION) — SCALE : 1 1/2" = 1'-0" — 10

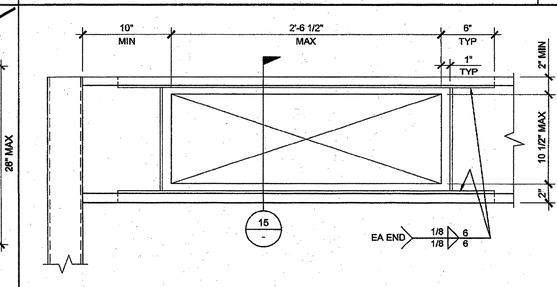

OPENING AT HEADER — SCALE : 1 1/2"=1'-0" — 5

THESE DRAWINGS AND ALL MATERIAL CONTAINED HEREIN ARE THE PROPERTY OF SILVERCREEK INDUSTRIES, INC (SCI Inc) AND SHALL NOT BE REPRODUCED, COPIED OR OTHERWISE DISPOSED OF DIRECTLY OR INDIRECTLY AND SHALL NOT BE USED IN WHOLE OR IN PART TO ASSIST IN THE MAKING OF OR FOR THE PURPOSE OF FURNISHING ANY INFORMATION FOR THE MAKING OF DRAWINGS, PRINTS, APPARATUS OR PARTS THEREOF WITHOUT THE FULL KNOWLEDGE AND WRITTEN CONSENT OF SCI Inc.
ALL PATENTABLE MATERIAL CONTAINED HEREIN AND ORIGINATING WITH SCI Inc SHALL BE THE PROPERTY OF SCI Inc

SILVER CREEK INDUSTRIES, INC.
"BUILDING FOR THE NEXT GENERATION"
SILVER CREEK
2830 BARRETT AVE PERRIS, CALIFORNIA 92571
PHONE: 951-943-5393 FAX: 951-943-2211

PROJECT NAME:

24x40 STOCKPILE OFFICE BUILDING

SHEET TITLE:

ROOF FRAMING DETAILS
DUAL SLOPE

STAVARES ASSOCIATES
DESIGN&CONSULTING&PROJECT MGT
14072 W. MERIDIAN PL, SUITE 202
SAN DIEGO, CA 92127 858-487-5904
WWW.SAM-STAVARES.COM
LICENSED ARCHITECT SAM D. STAVARES III C-33467 REN 01-31-2017 STATE OF CALIFORNIA
REGISTERED PROFESSIONAL ENGINEER JAMES D. FRISCH No. S3380 STRUCTURAL STATE OF CALIFORNIA
RSFB 14217
06/15/15

ARCHITECT OF RECORD SUBMISSION DATE

FILE #: 15-6
IDENTIFICATION STAMP
DIV. OF THE STATE ARCHITECT
OFFICE OF REGULATION SERVICES
03-118270
AC FLS SS OL
DATE NOV - 8 2017
TRACKING #: 63221-290

PROJECT SPECIFIC STATE AGENCY APPROVAL

IDENTIFICATION STAMP
DIV. OF THE STATE ARCHITECT
04 116284
ACS FLS SS RAF
DATE MAY 18 2017

ORIGINAL PC STATE AGENCY APPROVAL

PRE-CHECK (PC) DOCUMENT CODE: 2013 CBC
A SEPARATE PROJECT APPLICATION FOR CONSTRUCTION IS REQUIRED

IDENTIFICATION STAMP
DIV. OF THE STATE ARCHITECT
OFFICE OF REGULATION SERVICES
PC 04-114102
AC FLS SS RAF
DATE AUG - 4 2015

REVISIONS
1
2
3
4
5
6
7
8

SILVER CREEK INDUSTRIES
24' x 40' PC - 2:12 PITCH

PROJECT NO:	
DRAWN BY:	
SCALE:	AS NOTED
DATE:	01-30-15

P.C. SHEET NUMBER

S-2.51

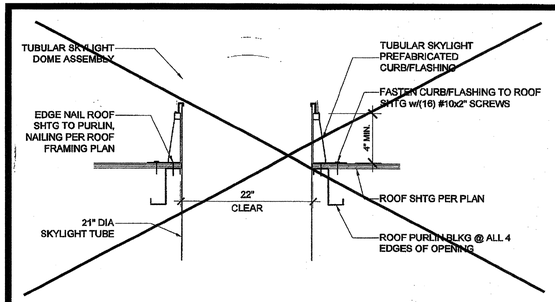

TUBULAR SKYLIGHT SECTION SCALE : 1" = 1'-0" 16

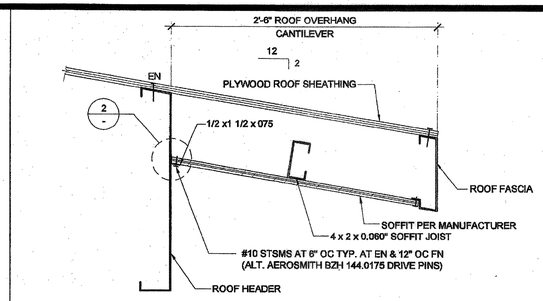

REAR OVERHANG SECTION SCALE : 1 1/2" = 1'-0" 11

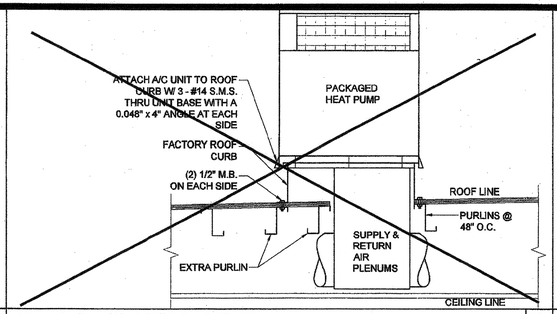

HVAC CURB ATTACHMENT SCALE : 3/4" = 1'-0" 6

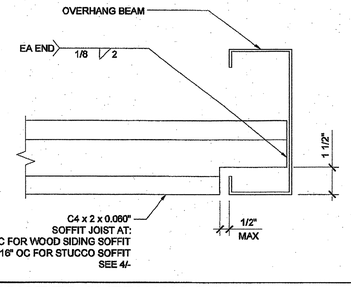

SOFFIT JOIST TO OVERHANG BEAM SCALE : 3"=1'-0" 1

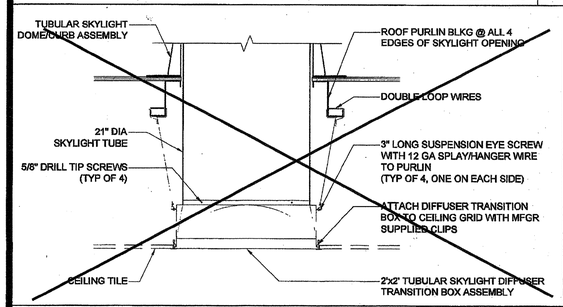

TUBULAR SKYLIGHT DIFFUSER SECTION SCALE : 1" = 1'-0" 17

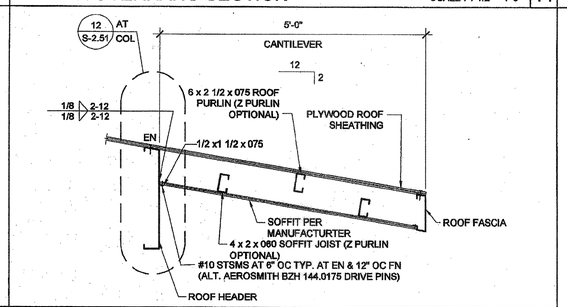

FRONT OVERHANG SECTION - DUAL SLOPE SCALE: 3/4" = 1'-0" 12

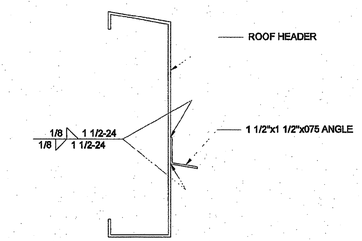

SOFFIT ANGLE TO HEADER CONNECTION SCALE : 3"=1'-0" 2

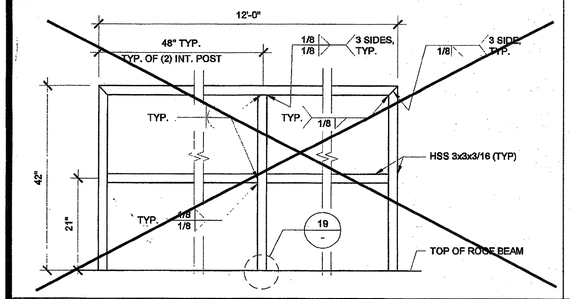

GUARDRAIL AT SIDEWALL 18

13

8

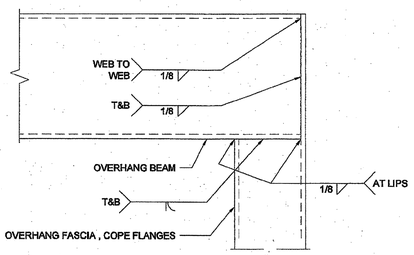

OVERHANG FASCIA TO BEAM CONNECTION SCALE : 6"=1'-0" 3

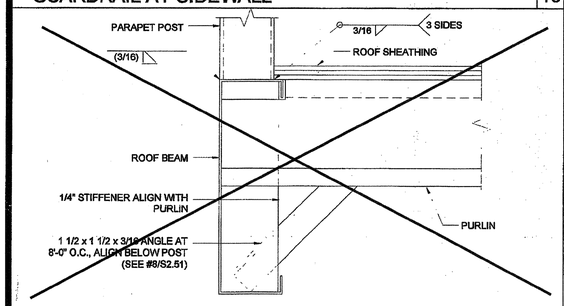

TUBE STEEL TO BEAM AT SIDEWALL SCALE : 3"=1'-0" 19

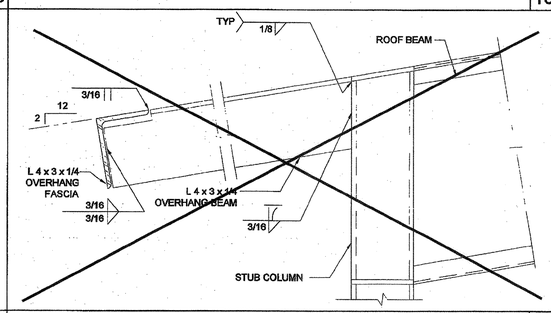

5'-0" ROOF OVERHANG AT .030 ROOF SCALE : 3"=1'-0" 14

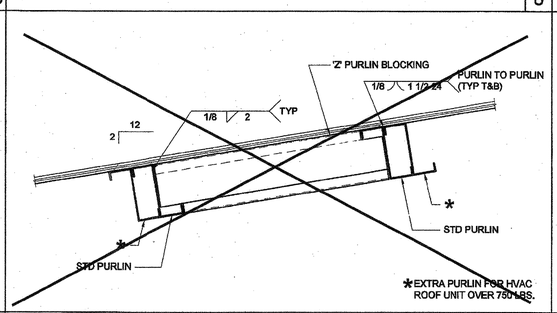

DOUBLE PURLINS AT HVAC SCALE: 1 1/2" = 1'-0" 9

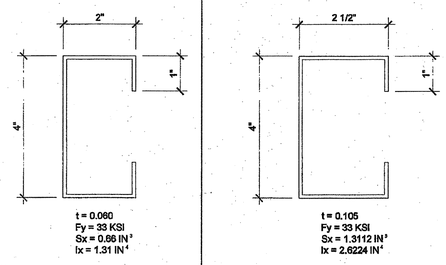

SOFFIT JOIST 4A (OPT) ROOF OVERHANG SCALE : 6"=1'-0" 4

20

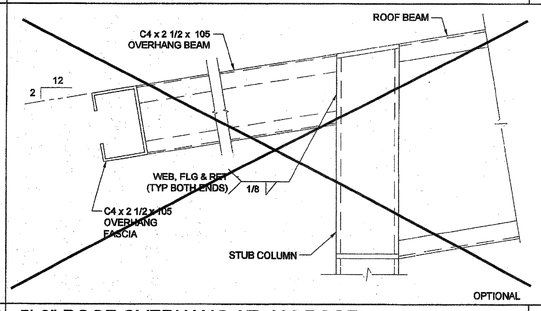

5'-0" ROOF OVERHANG AT .030 ROOF SCALE : 3" = 1'-0" 15

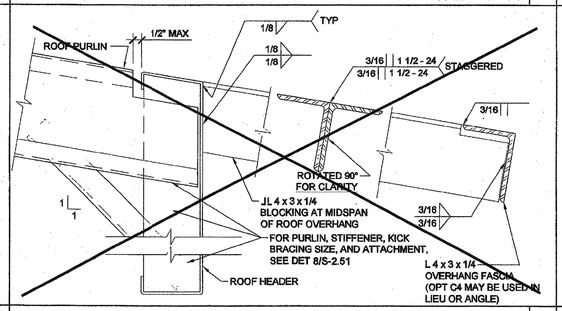

OVERHANG SUPPORT TO ROOF HDR @ STIFFENER SCALE : 3"=1'-0" 10

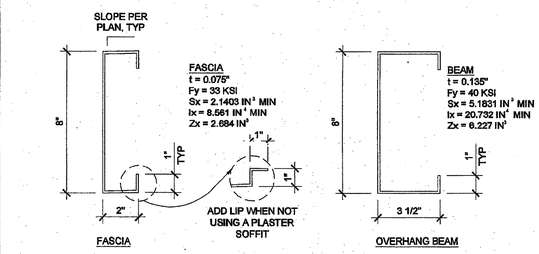

OVERHANG FASCIA & BEAM SCALE : 3"=1'-0" 5

THESE DRAWINGS AND ALL MATERIAL CONTAINED HEREIN ARE THE PROPERTY OF SILVERCREEK INDUSTRIES, INC (SCI Inc) AND SHALL NOT BE REPRODUCED, COPIED OR OTHERWISE DISPOSED OF DIRECTLY OR INDIRECTLY AND SHALL NOT BE USED IN WHOLE OR IN PART TO ASSIST IN THE MAKING OF OR FOR THE PURPOSE OF FURNISHING ANY INFORMATION FOR THE MAKING OF DRAWINGS, PRINTS, APPARATUS OR PARTS THEREOF WITHOUT THE FULL KNOWLEDGE AND WRITTEN CONSENT OF SCI Inc.
ALL PATENTABLE MATERIAL CONTAINED HEREIN AND ORIGINATING WITH SCI Inc SHALL BE THE PROPERTY OF SCI Inc

SILVER CREEK INDUSTRIES, INC.
"BUILDING FOR THE NEXT GENERATION"
SILVER CREEK
2830 BARRETT AVE PERRIS, CALIFORNIA 92571
PHONE: 951-943-5393 FAX: 951-943-2211

PROJECT NAME:

24x40 STOCKPILE OFFICE BUILDING

SHEET TITLE:

ROOF FRAMING DETAILS

TAVARES & ASSOCIATES
DESIGN & CONSULTING • PROJECT MGT
1.619.16 st. RICHMOND, No. SUITE 320
San Diego, CA 92139 Tel:619.423.2224
www.tavarasinc.com
LICENSED ARCHITECT
JOHN R. SHIVELY III
C-33467
REN 01-31-2017
STATE OF CALIFORNIA

ARCHITECT OF RECORD SUBMISSION DATE

FILE #: 15-6
IDENTIFICATION STAMP
DIV. OF THE STATE ARCHITECT
OFFICE OF REGULATION SERVICES
03-118270
AC. FLS. SS. CL
DATE NOV - 8 2017
TRACKING #: 63221-290

PROJECT SPECIFIC STATE AGENCY APPROVAL

IDENTIFICATION STAMP
DIV. OF THE STATE ARCHITECT
04 116284
ACS FLS SS RAF
DATE MAY 18 2017

ORIGINAL PC STATE AGENCY APPROVAL

PRE-CHECK (PC) DOCUMENT
NOT FOR CONSTRUCTION
A SEPARATE REQUEST APPLICATION FOR CONSTRUCTION IS REQUIRED

IDENTIFICATION STAMP
DIV. OF THE STATE ARCHITECT
OFFICE OF REGULATION SERVICES
PC 04-114102
AC. FLS. SS RAF
DATE AUG - 4 2015

REVISIONS

1
2
3
4
5
6
7
8

SILVER CREEK INDUSTRIES
24' x 40' PC - 2:12 PITCH

PROJECT NO:	
DRAWN BY:	
SCALE:	AS NOTED
DATE:	01-30-15
P.C. SHEET NUMBER	S-2.60

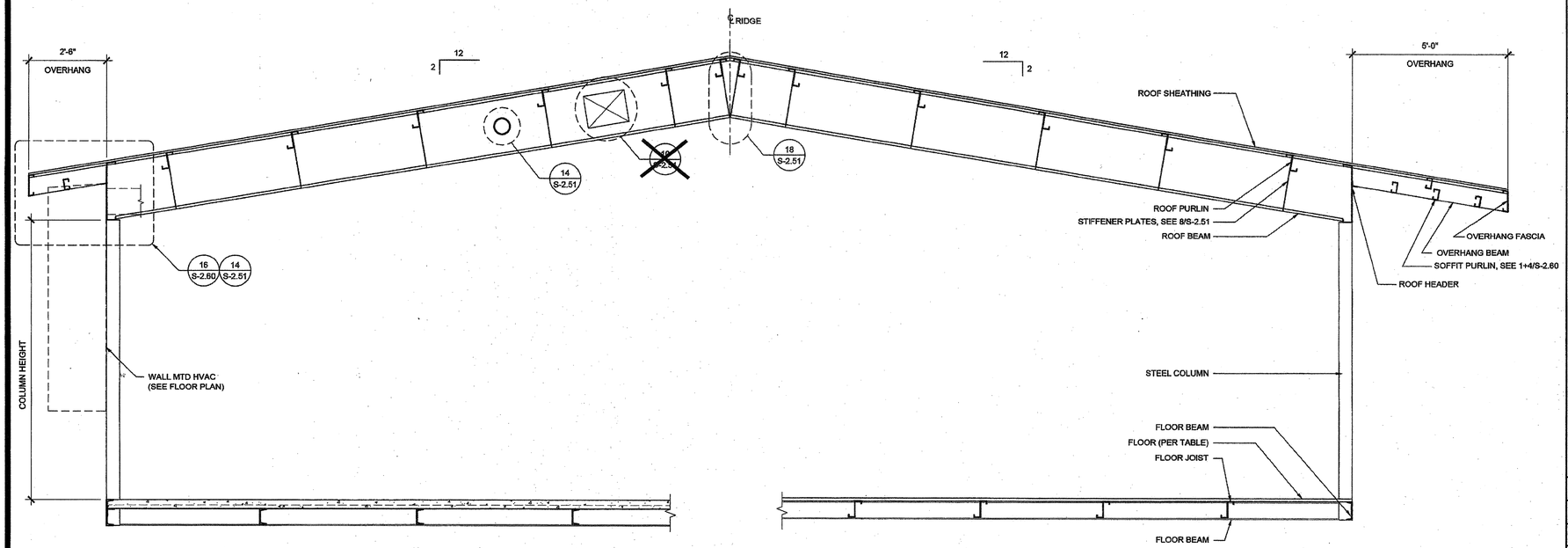

BUILDING SECTION

SCALE: 1/2" = 1'-0" | 1

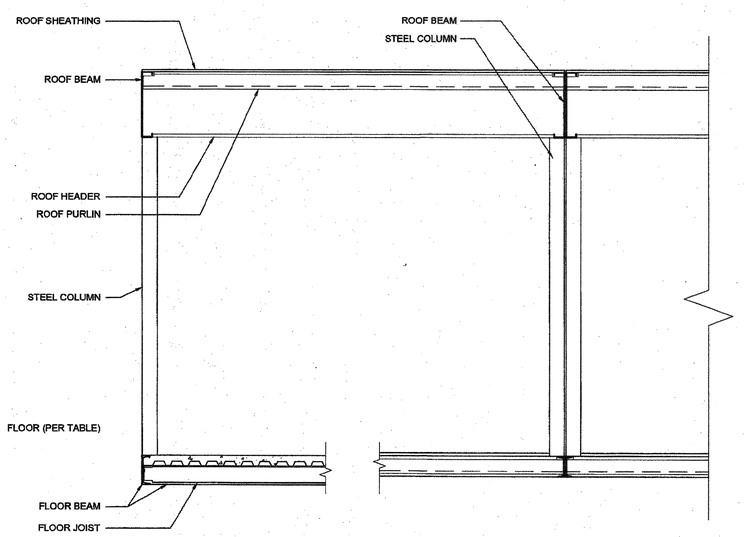

BUILDING SECTION

SCALE: 1/2" = 1'-0" | 3

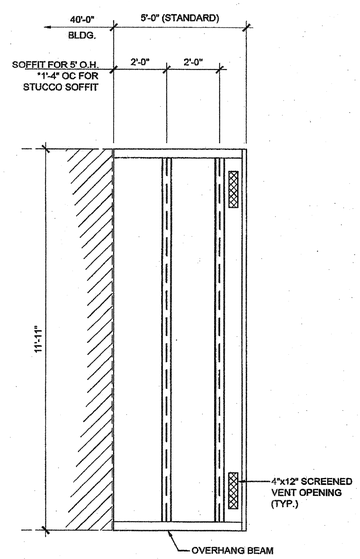

ENCL. SOFFIT PLAN-OPT.

SCALE: 3/8" = 1'-0" | 2

NOTES

1. ALL INFORMATION SUCH AS DETAILS, SECTIONS, CONNECTIONS, AND MATERIAL ATTACHMENT SHALL BE REFERENCED FROM OTHER SHEETS WITHIN THIS SET WHERE IT APPLIES.

FLOOR CONSTRUCTION

- [x] WOOD FLOOR
- [ ] CONCRETE FLOOR

HSS COLUMN SCHEDULE

COLUMN HEIGHT	OPT -12" SIDE OH	STD WALL W/ METAL ROOF	STD WALL W/ BUILT UP	PLASTER WALL W/ METAL ROOF OR B.U.
[x] 9'-0" STD	[ ] YES	[x] 5 x 5 x 1/4	[ ] 5 x 5 x 1/4	[ ] 5 x 5 x 1/4
[ ] 9'-6" STD	[ ] YES	[ ] 5 x 5 x 1/4	[ ] 5 x 5 x 1/4	[ ] 5 x 5 x 1/4
[ ] 9'-0" SNOW	N/A	[ ] 5 x 5 x 1/4	[ ] 5 x 5 x 1/4	[ ] 5 x 5 x 1/4
[ ] 9'-6" SNOW	N/A	[ ] 5 x 5 x 1/4	[ ] 5 x 5 x 1/4	[ ] 5 x 5 x 1/4

THESE DRAWINGS AND ALL MATERIAL CONTAINED HEREIN ARE THE PROPERTY OF SILVERCREEK INDUSTRIES, INC (SCI Inc) AND SHALL NOT BE REPRODUCED, COPIED OR OTHERWISE DISPOSED OF DIRECTLY OR INDIRECTLY AND SHALL NOT BE USED IN WHOLE OR IN PART TO ASSIST IN THE MAKING OF OR FOR THE PURPOSE OF FURNISHING ANY INFORMATION FOR THE MAKING OF DRAWINGS, PRINTS, APPARATUS OR PARTS THEREOF WITHOUT THE FULL KNOWLEDGE AND WRITTEN CONSENT OF SCI Inc.
ALL PATENTABLE MATERIAL CONTAINED HEREIN AND ORIGINATING WITH SCI Inc SHALL BE THE PROPERTY OF SCI Inc

SILVER CREEK INDUSTRIES, INC.
"BUILDING FOR THE NEXT GENERATION"
SILVER CREEK
2830 BARRETT AVE PERRIS, CALIFORNIA 92571
PHONE: 951-943-5393 FAX: 951-943-2211

PROJECT NAME:

24x40 STOCKPILE OFFICE BUILDING

SHEET TITLE:

BUILDING SECTIONS
0.018" DUAL SLOPE

TAVARES ASSOCIATES
DESIGN&CONSTRUCTIONPROJECT MGT
14875 W. BERNARDO DR. SUITE 300
SAN DIEGO, CA 92127 858.444.2324
www.ARCHCODES.com

LICENSED ARCHITECT
JAMES SHIVELY III
C-33467
REN 01-31-2017
STATE OF CALIFORNIA

REGISTERED PROFESSIONAL ENGINEER
DAVID D. PARISH
No. S3380
STRUCTURAL
STATE OF CALIFORNIA

RSTP# 14217

06/15/15

ARCHITECT OF RECORD SUBMISSION DATE

FILE #: 15-6
IDENTIFICATION STAMP
DIV. OF THE STATE ARCHITECT
OFFICE OF REGULATION SERVICES
03-118270
AC___ FLS___ SS CL
DATE NOV - 8 2017
TRACKING #: 63221-290

PROJECT SPECIFIC STATE AGENCY APPROVAL

IDENTIFICATION STAMP
DIV. OF THE STATE ARCHITECT
04 116284 I.
ACS___ FLS___ SS RAF
DATE MAY 18 2017

ORIGINAL PC STATE AGENCY APPROVAL

PRE-CHECK (PC) DOCUMENT
CCR-2013 CBC
A SEPARATE PROJECT APPLICATION FOR CONSTRUCTION IS REQUIRED

IDENTIFICATION STAMP
DIV. OF THE STATE ARCHITECT
OFFICE OF REGULATION SERVICES
PC 04-114102
AC___ FLS___ SS RAF
DATE AUG - 4 2015

REVISIONS

1
2
3
4
5
6
7
8

SILVER CREEK INDUSTRIES
24' x 40' PC - 2:12 PITCH

PROJECT NO:	
DRAWN BY:	
SCALE:	AS NOTED
DATE:	01-30-15

P.C. SHEET NUMBER

S-3.02

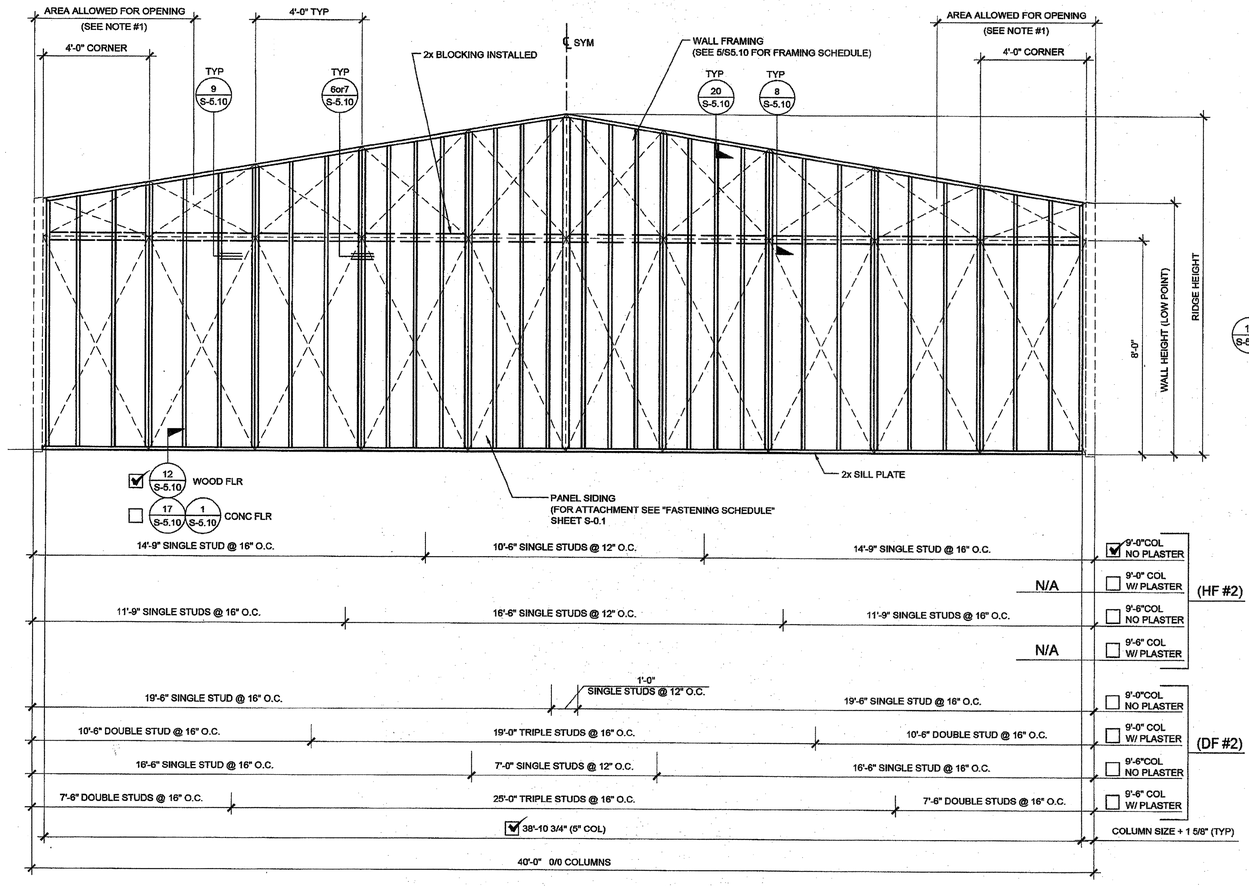

TYPICAL SIDE WALL

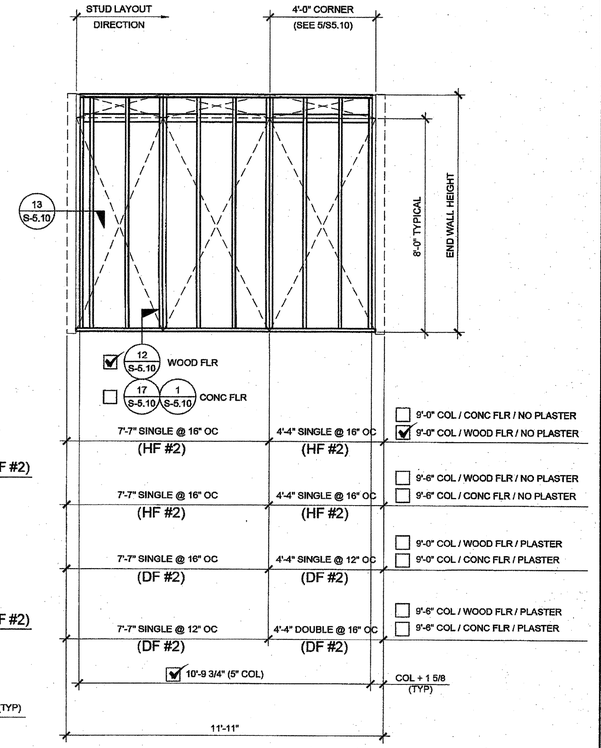

TYPICAL END WALL

NOTE:
2x6 @ 16" O.C. WALL FRAMING TO BE USED WHEN PLASTER OPTION IS TAKEN, 2x4 PLASTER OPTIONS SHOWN ARE OPTIONAL

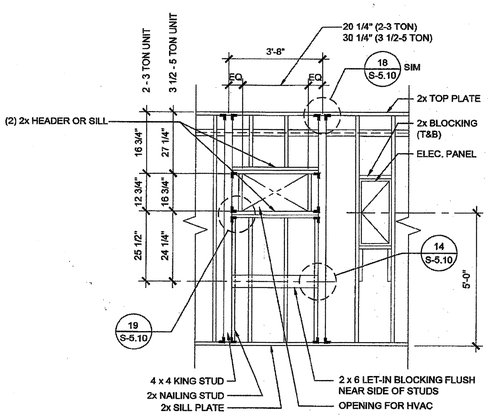

TYPICAL HVAC

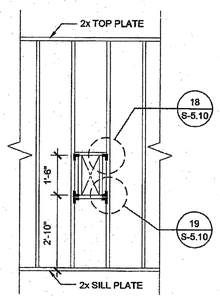

FIRE EXTINGUISHER CABINET BLOCKOUT

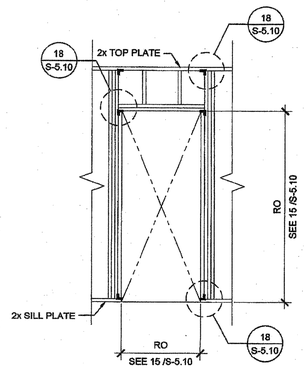

TYPICAL DOOR

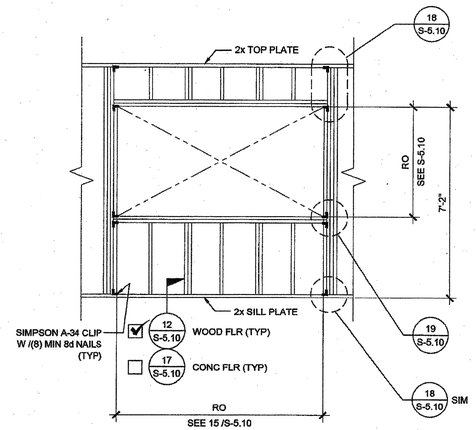

TYPICAL WINDOW

FRAMING ELEVATIONS

SCALE: 3/8" = 1'-0" | 1

NOTES

1. AREA ALLOWED FOR OPENING FROM CORNER AT SIDE WALL:
   - ☑ 9'-0" AT 9'-0" COLUMN HEIGHT
   - ☐ 6'-0" AT 9'-6" COLUMN HEIGHT

2X4 WOOD STUDS

MAX. WALL HEIGHT (FT) SCHEDULE FOR 2x4 STUDS

		SINGLE STUD @ 16" O.C.		SINGLE STUD @ 12" O.C.	
		HF	DF	HF	DF
WALL FRMG.	PLASTER	8.49	9.08	9.32	9.97
(Z-4)	NO PLASTER	12.14	12.99	13.34	14.27
4' FROM	PLASTER	7.94	8.49	8.72	9.32
CORNER (Z-5)	NO PLASTER	11.34	12.14	12.46	13.34

		DOUBLE STUD @ 16" O.C.		TRIPLE STUD @ 16" O.C.	
		HF	DF	HF	DF
WALL FRMG.	PLASTER	10.64	11.38	12.14	12.99
(Z-4)	NO PLASTER	15.23	16.30	17.40	18.63
4' FROM	PLASTER	9.94	10.64	11.34	12.14
CORNER (Z-5)	NO PLASTER	14.23	15.23	16.25	17.40

2x6 WOOD STUDS HF#2 OR DF#2 @ 16" O.C. - ALL SCENARIOS
2x8 WOOD STUDS HF#2 OR DF#2 @ 16" O.C. - ALL SCENARIOS

THESE DRAWINGS AND ALL MATERIAL CONTAINED HEREIN ARE THE PROPERTY OF SILVERCREEK INDUSTRIES, INC (SCI Inc) AND SHALL NOT BE REPRODUCED, COPIED OR OTHERWISE DISPOSED OF DIRECTLY OR INDIRECTLY AND SHALL NOT BE USED IN WHOLE OR IN PART TO ASSIST IN THE MAKING OF OR FOR THE PURPOSE OF FURNISHING ANY INFORMATION FOR THE MAKING OF DRAWINGS, PRINTS, APPARATUS OR PARTS THEREOF WITHOUT THE FULL KNOWLEDGE AND WRITTEN CONSENT OF SCI Inc.
ALL PATENTABLE MATERIAL CONTAINED HEREIN AND ORIGINATING WITH SCI Inc SHALL BE THE PROPERTY OF SCI Inc

SILVER CREEK INDUSTRIES, INC.
"BUILDING FOR THE NEXT GENERATION"
SILVER CREEK
2830 BARRETT AVE PERRIS, CALIFORNIA 92571
PHONE: 951-943-5393 FAX: 951-943-2211

PROJECT NAME:

24x40 STOCKPILE OFFICE BUILDING

SHEET TITLE:

WALL FRAMING ELEVATIONS
WOOD STUDS

STAVARES ASSOCIATES
DESIGN&DESIGNBUILD&PROJECT MGT
16972 W. BERNARDO DR. SUITE 255
San Diego, CA 92127 858.444.2044
www.rstavares.com

LICENSED ARCHITECT
RAYMOND E. SHIVELY III
C-33467
REN 01-31-2017
STATE OF CALIFORNIA

REGISTERED PROFESSIONAL ENGINEER
RAYMOND D. PARISH
No. S3380
STRUCTURAL
STATE OF CALIFORNIA

RST# 14217
06/15

ARCHITECT OF RECORD SUBMISSION DATE

FILE # 15-6
IDENTIFICATION STAMP
DIV. OF THE STATE ARCHITECT
OFFICE OF REGULATION SERVICES
03-118270
AC ___ FLS ___ SS CL
DATE NOV - 8 2017
TRACKING #: 63221-290

PROJECT SPECIFIC STATE AGENCY APPROVAL

IDENTIFICATION STAMP
DIV. OF THE STATE ARCHITECT
04 116284
ACS X FLS ___ SS RAF
DATE MAY 18 2017

ORIGINAL PC STATE AGENCY APPROVAL

PRE-CHECK (PC) DOCUMENT
CODE: 2013 CBC
A SEPARATE PRJECT APPLICATION
IS TO CONTAIN THE FINAL VERSION

IDENTIFICATION STAMP
DIV. OF THE STATE ARCHITECT
OFFICE OF REGULATION SERVICES
PC 04-114102
AC ___ FLS ___ SS RAF
DATE AUG - 4 2015

REVISIONS

1
2
3
4
5
6
7
8

SILVER CREEK INDUSTRIES
24' x 40' PC - 2:12 PITCH

PROJECT NO:	
DRAWN BY:	
SCALE:	AS NOTED
DATE:	01-30-15

P.C. SHEET NUMBER

S-5.00

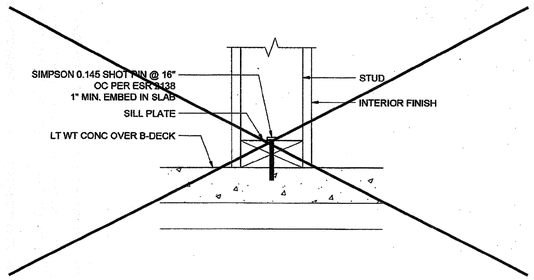

PARTITION CONNECTION AT CONC FLOOR SCALE : 3"=1'-0" 16

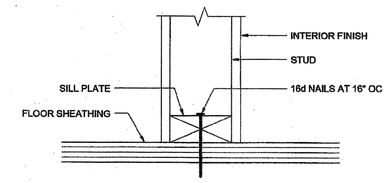

PARTITION CONNECTION AT WOOD FLOOR SCALE : 3"=1'-0" 11

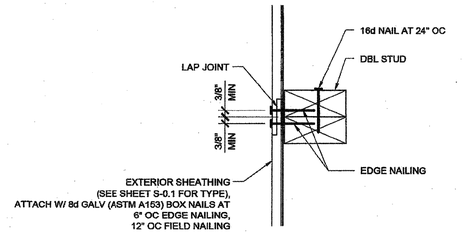

VERTICAL SHEATHING LAP JOINT SCALE : 3"=1'-0" 6

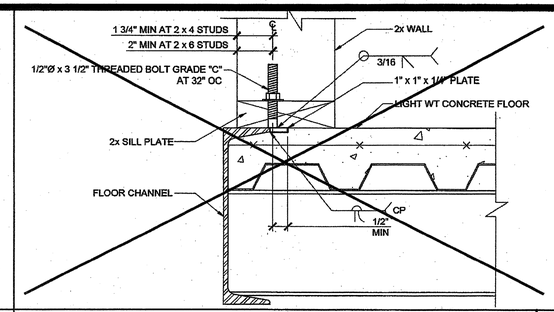

OPTIONAL BOLTED WALL TO FLOOR SCALE : NTS 1

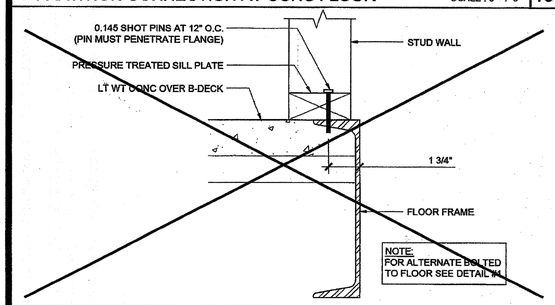

WALL SILL AT CONCRETE FLOOR SCALE : 3"=1'-0" 17

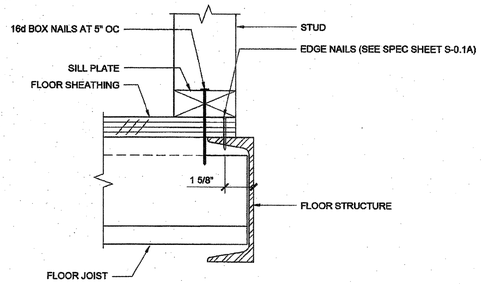

WALL SILL AT WOOD FLOOR SCALE : 3"=1'-0" 12

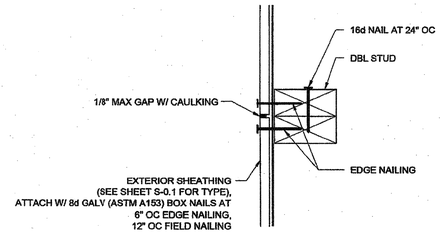

VERTICAL SHEATHING BUTT JOINT SCALE : 3"=1'-0" 7

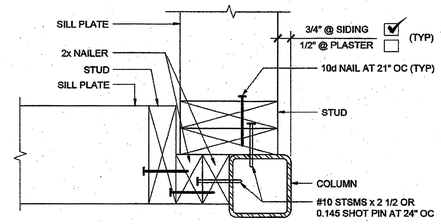

COLUMN AT ENDWALL (2x4) SCALE : 3"=1'-0" 2

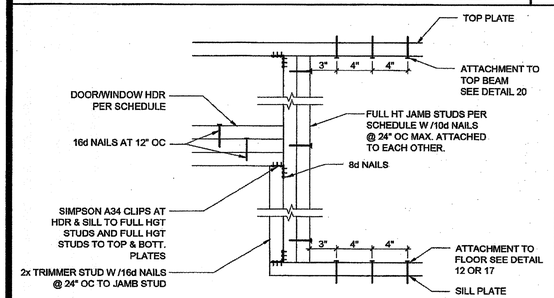

DOOR/WINDOW HEADER AND JAMB SCALE : 1 1/2"=1'-0" 18

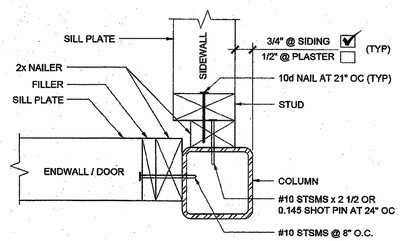

COLUMN AT ENDWALL (2x4) SCALE : 3"=1'-0" 13

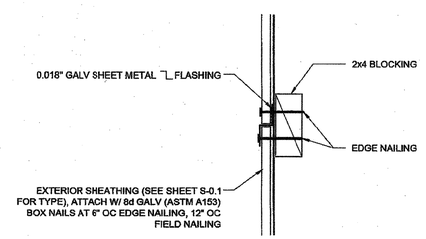

HORIZONTAL SHEATHING JOINT SCALE : 3"=1'-0" 8

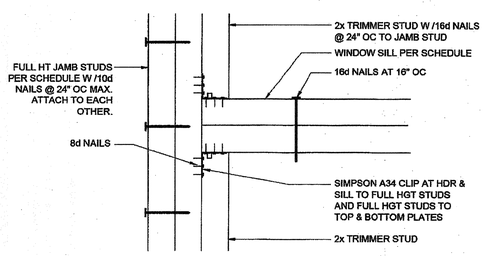

WINDOW SILL AND JAMB SCALE : 3"=1'-0" 19

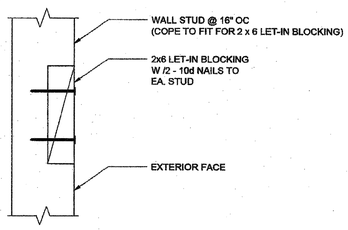

LET-IN BLOCK ATTACHMENT SCALE : 3"=1'-0" 14

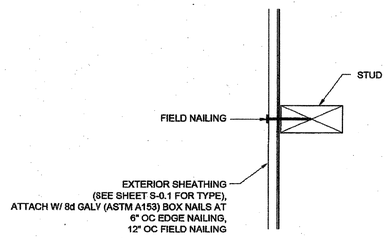

SECTION AT SHEATHING TO STUD ATTACHMENT SCALE : 3"=1'-0" 9

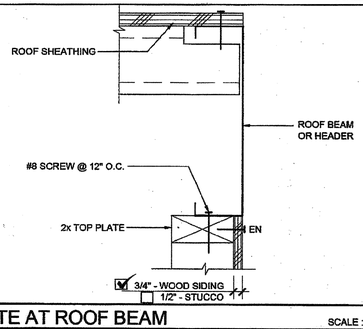

TOP PLATE AT ROOF BEAM SCALE : 3" = 1'-0" 20

DOOR	WINDOW	☐ STANDARD		☐ WELDED FRAME	
2070		26"	85"	28 1/4"	86 1/4"
3070		38"	85"	40 1/4"	86 1/4"
4070		50"	85"	52 1/4"	86 1/4"
6070		74"	85"	76 1/4"	86 1/4"
	4040	47 3/4"	47 5/8"	52 1/4"	52 1/4"
	6040	71 3/4"	47 5/8"	76 1/4"	52 1/4"
	8040	95 3/4"	47 5/8"	100 1/4"	52 1/4"
	6020	71 3/4"	23 5/8"	76 1/4"	28 1/4"
	8020	95 3/4"	23 5/8"	100 1/4"	28 1/4"

ROUGH OPENING SCHEDULE 15

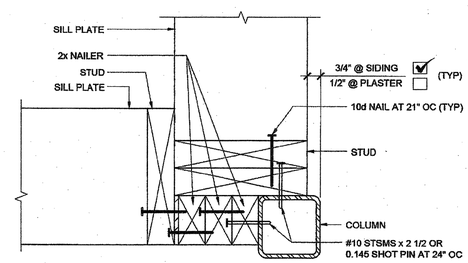

COLUMN AT ENDWALL (2x8) SCALE : 3"=1'-0" 10

THESE DRAWINGS AND ALL MATERIAL CONTAINED HEREIN ARE THE PROPERTY OF SILVERCREEK INDUSTRIES, INC (SCI Inc) AND SHALL NOT BE REPRODUCED, COPIED OR OTHERWISE DISPOSED OF DIRECTLY OR INDIRECTLY AND SHALL NOT BE USED IN WHOLE OR IN PART TO ASSIST IN THE MAKING OF OR FOR THE PURPOSE OF FURNISHING ANY INFORMATION FOR THE MAKING OF DRAWINGS, PRINTS, APPARATUS OR PARTS THEREOF WITHOUT THE FULL KNOWLEDGE AND WRITTEN CONSENT OF SCI Inc.
ALL PATENTABLE MATERIAL CONTAINED HEREIN AND ORIGINATING WITH SCI Inc SHALL BE THE PROPERTY OF SCI Inc

SILVER CREEK INDUSTRIES, INC.
"BUILDING FOR THE NEXT GENERATION"
SILVER CREEK
2830 BARRETT AVE PERRIS, CALIFORNIA 92571
PHONE: 951-943-5393 FAX: 951-943-2211

PROJECT NAME:

24x40 STOCKPILE OFFICE BUILDING

SHEET TITLE:

WALL FRAMING DETAILS
WOOD STUDS

TAVARES ASSOCIATES
DESIGN/CONSULTING/PROJECT MGT
16978 N. BERNARDO DR., SUITE 250
San Diego, CA 92127 858.444.5944
www.mtavares.com

LICENSED ARCHITECT JAMES MILVELY III C-33467 REN 01-31-2017 STATE OF CALIFORNIA

REGISTERED PROFESSIONAL ENGINEER DAVID D. KRISCH No. S3380 STRUCTURAL STATE OF CALIFORNIA

06/15/15

RSTB 142217

ARCHITECT OF RECORD SUBMISSION DATE

FILE #: 15-5
IDENTIFICATION STAMP
DIV. OF THE STATE ARCHITECT
OFFICE OF REGULATION SERVICES
03-118270
AC___ FLS___ SS CL
DATE NOV - 8 2017
TRACKING #: 63221-290

PROJECT SPECIFIC STATE AGENCY APPROVAL

IDENTIFICATION STAMP
DIV. OF THE STATE ARCHITECT
04 116284
ACS ___ FLS ___ SS RAF
DATE MAY 18 2017

ORIGINAL PC STATE AGENCY APPROVAL

PRE-CHECK (PC) DOCUMENT
CCR: 2013 CBC
A SEPARATE PROJECT APPLICATION FOR CONSTRUCTION IS REQUIRED

IDENTIFICATION STAMP
DIV. OF THE STATE ARCHITECT
OFFICE OF REGULATION SERVICES
PC 04-114102
AC___ FLS___ SS RAF
DATE AUG - 4 2015

REVISIONS

1
2
3
4
5
6
7
8

SILVER CREEK INDUSTRIES
24' x 40' PC - 2:12 PITCH

PROJECT NO:
DRAWN BY:
SCALE: AS NOTED
DATE: 01-30-15

P.C. SHEET NUMBER

S-5.10

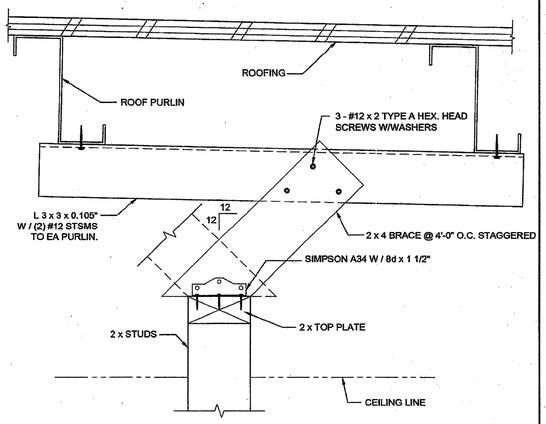

INTERIOR PARTITION

SCALE : 3" = 1'-0" | 14

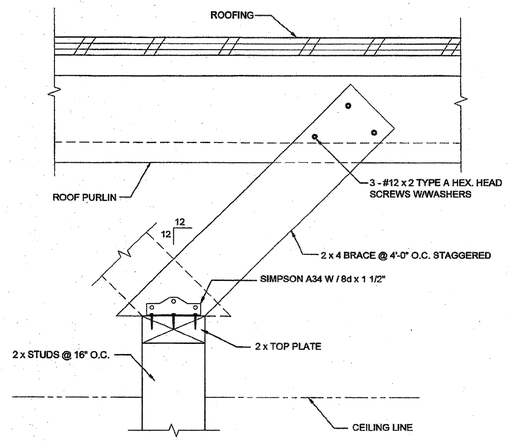

INTERIOR PARTITION

SCALE : 3" = 1'-0" | 12

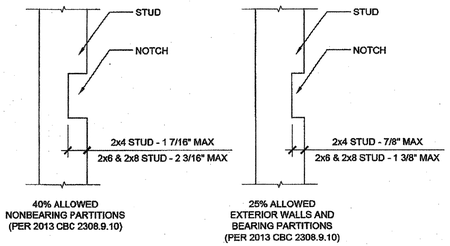

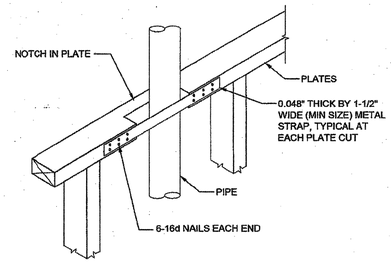

CUTTING AND NOTCHING

SCALE : 1 1/2" = 1'-0" | 7

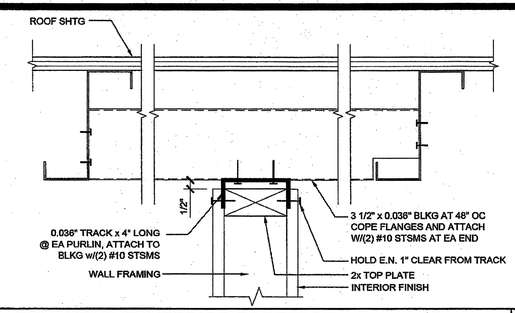

FULL HEIGHT INTERIOR PARTITION

SCALE : 3" = 1'-0" | 1

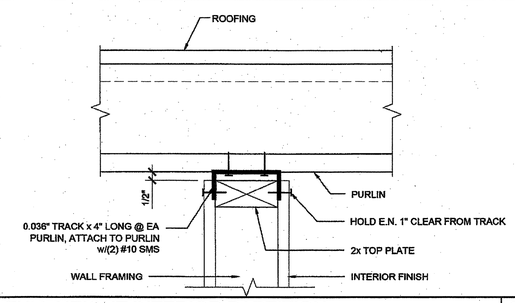

FULL HEIGHT INTERIOR PARTITION

SCALE : 3" = 1'-0" | 2

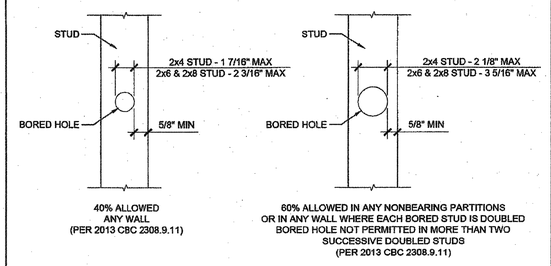

BORED HOLES

SCALE : 1 1/2" = 1'-0" | 8

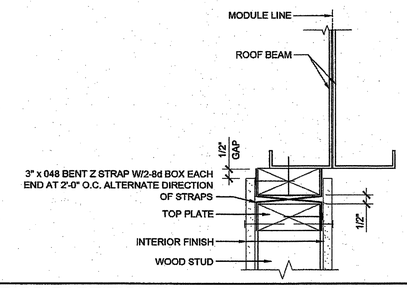

INTERIOR PARTITION WALL TO ROOF BEAM

SCALE : 3"=1'-0" | 3

NOT USED

9

NOT USED

4

NOT USED

10

NOT USED

5

THESE DRAWINGS AND ALL MATERIAL CONTAINED HEREIN ARE THE PROPERTY OF SILVERCREEK INDUSTRIES, INC (SCI Inc) AND SHALL NOT BE REPRODUCED, COPIED OR OTHERWISE DISPOSED OF DIRECTLY OR INDIRECTLY AND SHALL NOT BE USED IN WHOLE OR IN PART TO ASSIST IN THE MAKING OF OR FOR THE PURPOSE OF FURNISHING ANY INFORMATION FOR THE MAKING OF DRAWINGS, PRINTS, APPARATUS OR PARTS THEREOF WITHOUT THE FULL KNOWLEDGE AND WRITTEN CONSENT OF SCI Inc.
ALL PATENTABLE MATERIAL CONTAINED HEREIN AND ORIGINATING WITH SCI Inc SHALL BE THE PROPERTY OF SCI Inc

SILVER CREEK INDUSTRIES, INC.
"BUILDING FOR THE NEXT GENERATION"
SILVER CREEK
2830 BARRETT AVE PERRIS, CALIFORNIA 92571
PHONE: 951-943-5393 FAX: 951-943-2211

PROJECT NAME:

24x40 STOCKPILE OFFICE BUILDING

SHEET TITLE:

WALL FRAMING DETAILS
WOOD STUDS

TAVARES ASSOCIATES
DESIGN&CONSULTING&PROJECT MGT
18970 N. SIMMONS RD. (PO BOX 2)
SAN DIEGO, CA 92197 858.442.9924
www.RTAVARES.com

LICENSED ARCHITECT MIKE SHIVELY III C-33467 REN 01-31-2017 STATE OF CALIFORNIA

REGISTERED PROFESSIONAL ENGINEER DAVID D. KRISCH No. S3380 STRUCTURAL STATE OF CALIFORNIA

RST# 14217

06/15/15

ARCHITECT OF RECORD SUBMISSION DATE

FILE #: 15-6
IDENTIFICATION STAMP
DIV. OF THE STATE ARCHITECT
OFFICE OF REGULATION SERVICES
03-118270
AC FLS SS CL
DATE NOV 8 2017
TRACKING #: 53221-290

PROJECT SPECIFIC STATE AGENCY APPROVAL

IDENTIFICATION STAMP
DIV. OF THE STATE ARCHITECT
04 116284
AC FLS SS RAF
DATE MAY 18 2017

ORIGINAL PC STATE AGENCY APPROVAL

PRE-CHECK (PC) DOCUMENT NOT FOR CONSTRUCTION A SEPARATE REQUEST FOR APPLICATION FOR CONSTRUCTION IS REQUIRED

IDENTIFICATION STAMP
DIV. OF THE STATE ARCHITECT
OFFICE OF REGULATION SERVICES
PC 04-114102
AC FLS SS RAF
DATE AUG - 4 2015

REVISIONS

1
2
3
4
5
6
7
8

SILVER CREEK INDUSTRIES
24' x 40' PC - 2:12 PITCH

PROJECT NO:
DRAWN BY:
SCALE: AS NOTED
DATE: 01-30-15

P.C. SHEET NUMBER

S-5.11

MAX WALL HEIGHT	OPENING SIZE	EXT FINISH	HEADER				SILL				FULL HEIGHT KING STUD			
			NUMBER	SIZE	LUMBER	TYPE	NUMBER	SIZE	LUMBER	TYPE	NUMBER	SIZE	LUMBER	TYPE
12'-10" MAX	3070	NO PLASTER	(1)	2X4	HF	#2	(1)	2X4	HF	#2	(3)	2X4	HF	#2
	4070	NO PLASTER	(1)	2X4	HF	#2	(1)	2X4	HF	#2	(3)	2X4	HF	#2
	6040	NO PLASTER	(2)	2X4	HF	#2	(2)	2X4	HF	#2	(4)	2X4	HF	#2
	8040	NO PLASTER	(2)	2X4	HF	#2	(2)	2X4	HF	#2	(5)	2X4	HF	#2

2x4 OPENING SCHEDULE HF#2 @ 12'-10" MAX HEIGHT

MAX WALL HEIGHT	OPENING SIZE	EXT FINISH	HEADER				SILL				FULL HEIGHT KING STUD			
			NUMBER	SIZE	LUMBER	TYPE	NUMBER	SIZE	LUMBER	TYPE	NUMBER	SIZE	LUMBER	TYPE
12'-10" MAX	3070	NO PLASTER	(1)	2X4	DF	#2	(1)	2X4	DF	#2	(2)	2X4	DF	#2
	4070	NO PLASTER	(1)	2X4	DF	#2	(1)	2X4	DF	#2	(2)	2X4	DF	#2
	6040	NO PLASTER	(2)	2X4	DF	#2	(2)	2X4	DF	#2	(3)	2X4	DF	#2
	8040	NO PLASTER	(2)	2X4	DF	#2	(2)	2X4	DF	#2	(4)	2X4	DF	#2

2x4 OPENING SCHEDULE DF#2 @ 12'-10" MAX HEIGHT

MAX WALL HEIGHT	OPENING SIZE	EXT FINISH	HEADER				SILL				FULL HEIGHT KING STUD			
			NUMBER	SIZE	LUMBER	TYPE	NUMBER	SIZE	LUMBER	TYPE	NUMBER	SIZE	LUMBER	TYPE
12'-10" MAX	3070	NO PLASTER	(1)	2X6	HF	#2	(1)	2X6	HF	#2	(1)	2X6	HF	#2
		W/ PLASTER	(1)	2X6	HF	#2	(1)	2X6	HF	#2	(2)	2X6	HF	#2
	4070	NO PLASTER	(1)	2X6	HF	#2	(1)	2X6	HF	#2	(1)	2X6	HF	#2
		W/ PLASTER	(1)	2X6	HF	#2	(1)	2X6	HF	#2	(2)	2X6	HF	#2
	6040	NO PLASTER	(1)	2X6	HF	#2	(1)	2X6	HF	#2	(2)	2X6	HF	#2
		W/ PLASTER	(1)	2X6	HF	#2	(1)	2X6	HF	#2	(3)	2X6	HF	#2
	8040	NO PLASTER	(1)	2X6	HF	#2	(1)	2X6	HF	#2	(2)	2X6	HF	#2
		W/ PLASTER	(2)	2X6	HF	#2	(2)	2X6	HF	#2	(4)	2X6	HF	#2

2x6 OPENING SCHEDULE HF#2 @ 12'-10" MAX HEIGHT

MAX WALL HEIGHT	OPENING SIZE	EXT FINISH	HEADER				SILL				FULL HEIGHT KING STUD			
			NUMBER	SIZE	LUMBER	TYPE	NUMBER	SIZE	LUMBER	TYPE	NUMBER	SIZE	LUMBER	TYPE
12'-10" MAX	3070	NO PLASTER	(1)	2X6	DF	#2	(1)	2X6	DF	#2	(1)	2X6	DF	#2
		W/ PLASTER	(1)	2X6	DF	#2	(1)	2X6	DF	#2	(2)	2X6	DF	#2
	4070	NO PLASTER	(1)	2X6	DF	#2	(1)	2X6	DF	#2	(1)	2X6	DF	#2
		W/ PLASTER	(1)	2X6	DF	#2	(1)	2X6	DF	#2	(2)	2X6	DF	#2
	6040	NO PLASTER	(1)	2X6	DF	#2	(1)	2X6	DF	#2	(2)	2X6	DF	#2
		W/ PLASTER	(1)	2X6	DF	#2	(1)	2X6	DF	#2	(3)	2X6	DF	#2
	8040	NO PLASTER	(1)	2X6	DF	#2	(1)	2X6	DF	#2	(2)	2X6	DF	#2
		W/ PLASTER	(2)	2X6	DF	#2	(2)	2X6	DF	#2	(3)	2X6	DF	#2

2x6 OPENING SCHEDULE DF#2 @ 12'-10" MAX HEIGHT

MAX WALL HEIGHT	OPENING SIZE	EXT FINISH	HEADER				SILL				FULL HEIGHT KING STUD			
			NUMBER	SIZE	LUMBER	TYPE	NUMBER	SIZE	LUMBER	TYPE	NUMBER	SIZE	LUMBER	TYPE
12'-10" MAX	3070	NO PLASTER	(1)	2X8	HF	#2	(1)	2X8	HF	#2	(1)	2X8	HF	#2
		W/ PLASTER	(1)	2X8	HF	#2	(1)	2X8	HF	#2	(1)	2X8	HF	#2
	4070	NO PLASTER	(1)	2X8	HF	#2	(1)	2X8	HF	#2	(1)	2X8	HF	#2
		W/ PLASTER	(1)	2X8	HF	#2	(1)	2X8	HF	#2	(1)	2X8	HF	#2
	6040	NO PLASTER	(1)	2X8	HF	#2	(1)	2X8	HF	#2	(1)	2X8	HF	#2
		W/ PLASTER	(1)	2X8	HF	#2	(1)	2X8	HF	#2	(1)	2X8	HF	#2
	8040	NO PLASTER	(1)	2X8	HF	#2	(1)	2X8	HF	#2	(1)	2X8	HF	#2
		W/ PLASTER	(1)	2X8	HF	#2	(1)	2X8	HF	#2	(1)	2X8	HF	#2

2x8 OPENING SCHEDULE HF#2 @ 12'-10" MAX HEIGHT

MAX WALL HEIGHT	OPENING SIZE	EXT FINISH	HEADER				SILL				FULL HEIGHT KING STUD			
			NUMBER	SIZE	LUMBER	TYPE	NUMBER	SIZE	LUMBER	TYPE	NUMBER	SIZE	LUMBER	TYPE
12'-10" MAX	3070	NO PLASTER	(1)	2X8	DF	#2	(1)	2X8	DF	#2	(1)	2X8	DF	#2
		W/ PLASTER	(1)	2X8	DF	#2	(1)	2X8	DF	#2	(1)	2X8	DF	#2
	4070	NO PLASTER	(1)	2X8	DF	#2	(1)	2X8	DF	#2	(1)	2X8	DF	#2
		W/ PLASTER	(1)	2X8	DF	#2	(1)	2X8	DF	#2	(1)	2X8	DF	#2
	6040	NO PLASTER	(1)	2X8	DF	#2	(1)	2X8	DF	#2	(1)	2X8	DF	#2
		W/ PLASTER	(1)	2X8	DF	#2	(1)	2X8	DF	#2	(1)	2X8	DF	#2
	8040	NO PLASTER	(1)	2X8	DF	#2	(1)	2X8	DF	#2	(1)	2X8	DF	#2
		W/ PLASTER	(1)	2X8	DF	#2	(1)	2X8	DF	#2	(1)	2X8	DF	#2

2x8 OPENING SCHEDULE DF#2 @ 12'-10" MAX HEIGHT

MAX WALL HEIGHT	OPENING SIZE	EXT FINISH	HEADER				SILL				FULL HEIGHT KING STUD			
			NUMBER	SIZE	LUMBER	TYPE	NUMBER	SIZE	LUMBER	TYPE	NUMBER	SIZE	LUMBER	TYPE
9'-6" MAX	3070	NO PLASTER	(1)	2X8	HF	#2	(1)	2X8	HF	#2	(1)	2X8	HF	#2
		W/ PLASTER	(1)	2X8	HF	#2	(1)	2X8	HF	#2	(1)	2X8	HF	#2
	4070	NO PLASTER	(1)	2X8	HF	#2	(1)	2X8	HF	#2	(1)	2X8	HF	#2
		W/ PLASTER	(1)	2X8	HF	#2	(1)	2X8	HF	#2	(1)	2X8	HF	#2
	6040	NO PLASTER	(1)	2X8	HF	#2	(1)	2X8	HF	#2	(1)	2X8	HF	#2
		W/ PLASTER	(1)	2X8	HF	#2	(1)	2X8	HF	#2	(1)	2X8	HF	#2
	8040	NO PLASTER	(1)	2X8	HF	#2	(1)	2X8	HF	#2	(1)	2X8	HF	#2
		W/ PLASTER	(1)	2X8	HF	#2	(1)	2X8	HF	#2	(1)	2X8	HF	#2

2x8 OPENING SCHEDULE HF#2 @ 9'-6" MAX HEIGHT

MAX WALL HEIGHT	OPENING SIZE	EXT FINISH	HEADER				SILL				FULL HEIGHT KING STUD			
			NUMBER	SIZE	LUMBER	TYPE	NUMBER	SIZE	LUMBER	TYPE	NUMBER	SIZE	LUMBER	TYPE
10'-6" MAX	3070	NO PLASTER	(1)	2X8	HF	#2	(1)	2X8	HF	#2	(1)	2X8	HF	#2
		W/ PLASTER	(1)	2X8	HF	#2	(1)	2X8	HF	#2	(1)	2X8	HF	#2
	4070	NO PLASTER	(1)	2X8	HF	#2	(1)	2X8	HF	#2	(1)	2X8	HF	#2
		W/ PLASTER	(1)	2X8	HF	#2	(1)	2X8	HF	#2	(1)	2X8	HF	#2
	6040	NO PLASTER	(1)	2X8	HF	#2	(1)	2X8	HF	#2	(1)	2X8	HF	#2
		W/ PLASTER	(1)	2X8	HF	#2	(1)	2X8	HF	#2	(1)	2X8	HF	#2
	8040	NO PLASTER	(1)	2X8	HF	#2	(1)	2X8	HF	#2	(1)	2X8	HF	#2
		W/ PLASTER	(1)	2X8	HF	#2	(1)	2X8	HF	#2	(2)	2X8	HF	#2

2x8 OPENING SCHEDULE HF#2 @ 10'-6" MAX HEIGHT

MAX WALL HEIGHT	OPENING SIZE	EXT FINISH	HEADER				SILL				FULL HEIGHT KING STUD			
			NUMBER	SIZE	LUMBER	TYPE	NUMBER	SIZE	LUMBER	TYPE	NUMBER	SIZE	LUMBER	TYPE
9'-6" MAX	3070	NO PLASTER	(1)	2X8	DF	#2	(1)	2X8	DF	#2	(1)	2X8	DF	#2
		W/ PLASTER	(1)	2X8	DF	#2	(1)	2X8	DF	#2	(1)	2X8	DF	#2
	4070	NO PLASTER	(1)	2X8	DF	#2	(1)	2X8	DF	#2	(1)	2X8	DF	#2
		W/ PLASTER	(1)	2X8	DF	#2	(1)	2X8	DF	#2	(1)	2X8	DF	#2
	6040	NO PLASTER	(1)	2X8	DF	#2	(1)	2X8	DF	#2	(1)	2X8	DF	#2
		W/ PLASTER	(1)	2X8	DF	#2	(1)	2X8	DF	#2	(1)	2X8	DF	#2
	8040	NO PLASTER	(1)	2X8	DF	#2	(1)	2X8	DF	#2	(1)	2X8	DF	#2
		W/ PLASTER	(1)	2X8	DF	#2	(1)	2X8	DF	#2	(1)	2X8	DF	#2

2x8 OPENING SCHEDULE DF#2 @ 9'-6" MAX HEIGHT

MAX WALL HEIGHT	OPENING SIZE	EXT FINISH	HEADER				SILL				FULL HEIGHT KING STUD			
			NUMBER	SIZE	LUMBER	TYPE	NUMBER	SIZE	LUMBER	TYPE	NUMBER	SIZE	LUMBER	TYPE
10'-6" MAX	3070	NO PLASTER	(1)	2X8	DF	#2	(1)	2X8	DF	#2	(1)	2X8	DF	#2
		W/ PLASTER	(1)	2X8	DF	#2	(1)	2X8	DF	#2	(1)	2X8	DF	#2
	4070	NO PLASTER	(1)	2X8	DF	#2	(1)	2X8	DF	#2	(1)	2X8	DF	#2
		W/ PLASTER	(1)	2X8	DF	#2	(1)	2X8	DF	#2	(1)	2X8	DF	#2
	6040	NO PLASTER	(1)	2X8	DF	#2	(1)	2X8	DF	#2	(1)	2X8	DF	#2
		W/ PLASTER	(1)	2X8	DF	#2	(1)	2X8	DF	#2	(1)	2X8	DF	#2
	8040	NO PLASTER	(1)	2X8	DF	#2	(1)	2X8	DF	#2	(1)	2X8	DF	#2
		W/ PLASTER	(1)	2X8	DF	#2	(1)	2X8	DF	#2	(1)	2X8	DF	#2

2x8 OPENING SCHEDULE DF#2 @ 10'-6" MAX HEIGHT

MAX WALL HEIGHT	OPENING SIZE	EXT FINISH	HEADER				SILL				FULL HEIGHT KING STUD			
			NUMBER	SIZE	LUMBER	TYPE	NUMBER	SIZE	LUMBER	TYPE	NUMBER	SIZE	LUMBER	TYPE
12'-2" MAX	3070	NO PLASTER	(1)	2X8	HF	#2	(1)	2X8	HF	#2	(1)	2X8	HF	#2
		W/ PLASTER	(1)	2X8	HF	#2	(1)	2X8	HF	#2	(1)	2X8	HF	#2
	4070	NO PLASTER	(1)	2X8	HF	#2	(1)	2X8	HF	#2	(1)	2X8	HF	#2
		W/ PLASTER	(1)	2X8	HF	#2	(1)	2X8	HF	#2	(1)	2X8	HF	#2
	6040	NO PLASTER	(1)	2X8	HF	#2	(1)	2X8	HF	#2	(1)	2X8	HF	#2
		W/ PLASTER	(1)	2X8	HF	#2	(1)	2X8	HF	#2	(1)	2X8	HF	#2
	8040	NO PLASTER	(1)	2X8	HF	#2	(1)	2X8	HF	#2	(1)	2X8	HF	#2
		W/ PLASTER	(1)	2X8	HF	#2	(1)	2X8	HF	#2	(2)	2X8	HF	#2

2x8 OPENING SCHEDULE HF#2 @ 12'-2" MAX HEIGHT

MAX WALL HEIGHT	OPENING SIZE	EXT FINISH	HEADER				SILL				FULL HEIGHT KING STUD			
			NUMBER	SIZE	LUMBER	TYPE	NUMBER	SIZE	LUMBER	TYPE	NUMBER	SIZE	LUMBER	TYPE
12'-2" MAX	3070	NO PLASTER	(1)	2X8	DF	#2	(1)	2X8	DF	#2	(1)	2X8	DF	#2
		W/ PLASTER	(1)	2X8	DF	#2	(1)	2X8	DF	#2	(1)	2X8	DF	#2
	4070	NO PLASTER	(1)	2X8	DF	#2	(1)	2X8	DF	#2	(1)	2X8	DF	#2
		W/ PLASTER	(1)	2X8	DF	#2	(1)	2X8	DF	#2	(1)	2X8	DF	#2
	6040	NO PLASTER	(1)	2X8	DF	#2	(1)	2X8	DF	#2	(1)	2X8	DF	#2
		W/ PLASTER	(1)	2X8	DF	#2	(1)	2X8	DF	#2	(1)	2X8	DF	#2
	8040	NO PLASTER	(1)	2X8	DF	#2	(1)	2X8	DF	#2	(1)	2X8	DF	#2
		W/ PLASTER	(1)	2X8	DF	#2	(1)	2X8	DF	#2	(1)	2X8	DF	#2

2x8 OPENING SCHEDULE DF#2 @ 12'-2" MAX HEIGHT

MAX WALL HEIGHT	OPENING SIZE	EXT FINISH	HEADER				SILL				FULL HEIGHT KING STUD			
			NUMBER	SIZE	LUMBER	TYPE	NUMBER	SIZE	LUMBER	TYPE	NUMBER	SIZE	LUMBER	TYPE
9'-6" MAX	3070	NO PLASTER	(1)	2X6	HF	#2	(1)	2X6	HF	#2	(1)	2X6	HF	#2
		W/ PLASTER	(1)	2X6	HF	#2	(1)	2X6	HF	#2	(2)	2X6	HF	#2
	4070	NO PLASTER	(1)	2X6	HF	#2	(1)	2X6	HF	#2	(1)	2X6	HF	#2
		W/ PLASTER	(1)	2X6	HF	#2	(1)	2X6	HF	#2	(2)	2X6	HF	#2
	6040	NO PLASTER	(1)	2X6	HF	#2	(1)	2X6	HF	#2	(2)	2X6	HF	#2
		W/ PLASTER	(1)	2X6	HF	#2	(1)	2X6	HF	#2	(2)	2X6	HF	#2
	8040	NO PLASTER	(1)	2X6	HF	#2	(1)	2X6	HF	#2	(2)	2X6	HF	#2
		W/ PLASTER	(2)	2X6	HF	#2	(2)	2X6	HF	#2	(2)	2X6	HF	#2

2x6 OPENING SCHEDULE HF#2 @ 9'-6" MAX HEIGHT

MAX WALL HEIGHT	OPENING SIZE	EXT FINISH	HEADER				SILL				FULL HEIGHT KING STUD			
			NUMBER	SIZE	LUMBER	TYPE	NUMBER	SIZE	LUMBER	TYPE	NUMBER	SIZE	LUMBER	TYPE
10'-6" MAX	3070	NO PLASTER	(1)	2X6	HF	#2	(1)	2X6	HF	#2	(1)	2X6	HF	#2
		W/ PLASTER	(1)	2X6	HF	#2	(1)	2X6	HF	#2	(2)	2X6	HF	#2
	4070	NO PLASTER	(1)	2X6	HF	#2	(1)	2X6	HF	#2	(1)	2X6	HF	#2
		W/ PLASTER	(1)	2X6	HF	#2	(1)	2X6	HF	#2	(2)	2X6	HF	#2
	6040	NO PLASTER	(1)	2X6	HF	#2	(1)	2X6	HF	#2	(2)	2X6	HF	#2
		W/ PLASTER	(1)	2X6	HF	#2	(1)	2X6	HF	#2	(2)	2X6	HF	#2
	8040	NO PLASTER	(1)	2X6	HF	#2	(1)	2X6	HF	#2	(2)	2X6	HF	#2
		W/ PLASTER	(2)	2X6	HF	#2	(2)	2X6	HF	#2	(3)	2X6	HF	#2

2x6 OPENING SCHEDULE HF#2 @ 10'-6" MAX HEIGHT

MAX WALL HEIGHT	OPENING SIZE	EXT FINISH	HEADER				SILL				FULL HEIGHT KING STUD			
			NUMBER	SIZE	LUMBER	TYPE	NUMBER	SIZE	LUMBER	TYPE	NUMBER	SIZE	LUMBER	TYPE
9'-6" MAX	3070	NO PLASTER	(1)	2X6	DF	#2	(1)	2X6	DF	#2	(1)	2X6	DF	#2
		W/ PLASTER	(1)	2X6	DF	#2	(1)	2X6	DF	#2	(1)	2X6	DF	#2
	4070	NO PLASTER	(1)	2X6	DF	#2	(1)	2X6	DF	#2	(1)	2X6	DF	#2
		W/ PLASTER	(1)	2X6	DF	#2	(1)	2X6	DF	#2	(1)	2X6	DF	#2
	6040	NO PLASTER	(1)	2X6	DF	#2	(1)	2X6	DF	#2	(1)	2X6	DF	#2
		W/ PLASTER	(1)	2X6	DF	#2	(1)	2X6	DF	#2	(1)	2X6	DF	#2
	8040	NO PLASTER	(1)	2X6	DF	#2	(1)	2X6	DF	#2	(1)	2X6	DF	#2
		W/ PLASTER	(2)	2X6	DF	#2	(2)	2X6	DF	#2	(2)	2X6	DF	#2

2x6 OPENING SCHEDULE DF#2 @ 9'-6" MAX HEIGHT

MAX WALL HEIGHT	OPENING SIZE	EXT FINISH	HEADER				SILL				FULL HEIGHT KING STUD			
			NUMBER	SIZE	LUMBER	TYPE	NUMBER	SIZE	LUMBER	TYPE	NUMBER	SIZE	LUMBER	TYPE
10'-6" MAX	3070	NO PLASTER	(1)	2X6	DF	#2	(1)	2X6	DF	#2	(1)	2X6	DF	#2
		W/ PLASTER	(1)	2X6	DF	#2	(1)	2X6	DF	#2	(2)	2X6	DF	#2
	4070	NO PLASTER	(1)	2X6	DF	#2	(1)	2X6	DF	#2	(1)	2X6	DF	#2
		W/ PLASTER	(1)	2X6	DF	#2	(1)	2X6	DF	#2	(2)	2X6	DF	#2
	6040	NO PLASTER	(1)	2X6	DF	#2	(1)	2X6	DF	#2	(2)	2X6	DF	#2
		W/ PLASTER	(1)	2X6	DF	#2	(1)	2X6	DF	#2	(2)	2X6	DF	#2
	8040	NO PLASTER	(1)	2X6	DF	#2	(1)	2X6	DF	#2	(2)	2X6	DF	#2
		W/ PLASTER	(2)	2X6	DF	#2	(2)	2X6	DF	#2	(2)	2X6	DF	#2

2x6 OPENING SCHEDULE DF#2 @ 10'-6" MAX HEIGHT

MAX WALL HEIGHT	OPENING SIZE	EXT FINISH	HEADER				SILL				FULL HEIGHT KING STUD			
			NUMBER	SIZE	LUMBER	TYPE	NUMBER	SIZE	LUMBER	TYPE	NUMBER	SIZE	LUMBER	TYPE
12'-2" MAX	3070	NO PLASTER	(1)	2X6	HF	#2	(1)	2X6	HF	#2	(1)	2X6	HF	#2
		W/ PLASTER	(1)	2X6	HF	#2	(1)	2X6	HF	#2	(2)	2X6	HF	#2
	4070	NO PLASTER	(1)	2X6	HF	#2	(1)	2X6	HF	#2	(1)	2X6	HF	#2
		W/ PLASTER	(1)	2X6	HF	#2	(1)	2X6	HF	#2	(2)	2X6	HF	#2
	6040	NO PLASTER	(1)	2X6	HF	#2	(1)	2X6	HF	#2	(2)	2X6	HF	#2
		W/ PLASTER	(1)	2X6	HF	#2	(1)	2X6	HF	#2	(3)	2X6	HF	#2
	8040	NO PLASTER	(1)	2X6	HF	#2	(1)	2X6	HF	#2	(2)	2X6	HF	#2
		W/ PLASTER	(2)	2X6	HF	#2	(2)	2X6	HF	#2	(3)	2X6	HF	#2

2x6 OPENING SCHEDULE HF#2 @ 12'-2" MAX HEIGHT

MAX WALL HEIGHT	OPENING SIZE	EXT FINISH	HEADER				SILL				FULL HEIGHT KING STUD			
			NUMBER	SIZE	LUMBER	TYPE	NUMBER	SIZE	LUMBER	TYPE	NUMBER	SIZE	LUMBER	TYPE
12'-2" MAX	3070	NO PLASTER	(1)	2X6	DF	#2	(1)	2X6	DF	#2	(1)	2X6	DF	#2
		W/ PLASTER	(1)	2X6	DF	#2	(1)	2X6	DF	#2	(2)	2X6	DF	#2
	4070	NO PLASTER	(1)	2X6	DF	#2	(1)	2X6	DF	#2	(1)	2X6	DF	#2
		W/ PLASTER	(1)	2X6	DF	#2	(1)	2X6	DF	#2	(2)	2X6	DF	#2
	6040	NO PLASTER	(1)	2X6	DF	#2	(1)	2X6	DF	#2	(2)	2X6	DF	#2
		W/ PLASTER	(1)	2X6	DF	#2	(1)	2X6	DF	#2	(2)	2X6	DF	#2
	8040	NO PLASTER	(1)	2X6	DF	#2	(1)	2X6	DF	#2	(2)	2X6	DF	#2
		W/ PLASTER	(2)	2X6	DF	#2	(2)	2X6	DF	#2	(3)	2X6	DF	#2

2x6 OPENING SCHEDULE DF#2 @ 12'-2" MAX HEIGHT

MAX WALL HEIGHT	OPENING SIZE	EXT FINISH	HEADER				SILL				FULL HEIGHT KING STUD			
			NUMBER	SIZE	LUMBER	TYPE	NUMBER	SIZE	LUMBER	TYPE	NUMBER	SIZE	LUMBER	TYPE
9'-6" MAX	3070	NO PLASTER	(1)	2X4	DF	#2	(1)	2X4	DF	#2	(2)	2X4	DF	#2
	4070	NO PLASTER	(1)	2X4	DF	#2	(1)	2X4	DF	#2	(2)	2X4	DF	#2
	6040	NO PLASTER	(2)	2X4	DF	#2	(2)	2X4	DF	#2	(2)	2X4	DF	#2
	8040	NO PLASTER	(2)	2X4	DF	#2	(2)	2X4	DF	#2	(3)	2X4	DF	#2

2x4 OPENING SCHEDULE DF#2 @ 9'-6" MAX HEIGHT

MAX WALL HEIGHT	OPENING SIZE	EXT FINISH	HEADER				SILL				FULL HEIGHT KING STUD			
			NUMBER	SIZE	LUMBER	TYPE	NUMBER	SIZE	LUMBER	TYPE	NUMBER	SIZE	LUMBER	TYPE
10'-6" MAX	3070	NO PLASTER	(1)	2X4	DF	#2	(1)	2X4	DF	#2	(2)	2X4	DF	#2
	4070	NO PLASTER	(1)	2X4	DF	#2	(1)	2X4	DF	#2	(2)	2X4	DF	#2
	6040	NO PLASTER	(2)	2X4	DF	#2	(2)	2X4	DF	#2	(3)	2X4	DF	#2
	8040	NO PLASTER	(3)	2X4	DF	#2	(3)	2X4	DF	#2	(3)	2X4	DF	#2

2x4 OPENING SCHEDULE DF#2 @ 10'-6" MAX HEIGHT

MAX WALL HEIGHT	OPENING SIZE	EXT FINISH	HEADER				SILL				FULL HEIGHT KING STUD			
			NUMBER	SIZE	LUMBER	TYPE	NUMBER	SIZE	LUMBER	TYPE	NUMBER	SIZE	LUMBER	TYPE
9'-6" MAX	3070	NO PLASTER	(1)	2X4	HF	#2	(1)	2X4	HF	#2	(2)	2X4	HF	#2
	4070	NO PLASTER	(1)	2X4	HF	#2	(1)	2X4	HF	#2	(2)	2X4	HF	#2
	6040	NO PLASTER	(2)	2X4	HF	#2	(2)	2X4	HF	#2	(2)	2X4	HF	#2
	8040	NO PLASTER	(2)	2X4	HF	#2	(2)	2X4	HF	#2	(3)	2X4	HF	#2

2x4 OPENING SCHEDULE HF#2 @ 9'-6" MAX HEIGHT

MAX WALL HEIGHT	OPENING SIZE	EXT FINISH	HEADER				SILL				FULL HEIGHT KING STUD			
			NUMBER	SIZE	LUMBER	TYPE	NUMBER	SIZE	LUMBER	TYPE	NUMBER	SIZE	LUMBER	TYPE
10'-6" MAX	3070	NO PLASTER	(1)	2X4	HF	#2	(1)	2X4	HF	#2	(2)	2X4	HF	#2
	4070	NO PLASTER	(1)	2X4	HF	#2	(1)	2X4	HF	#2	(2)	2X4	HF	#2
	6040	NO PLASTER	(2)	2X4	HF	#2	(2)	2X4	HF	#2	(3)	2X4	HF	#2
	8040	NO PLASTER	(3)	2X4	HF	#2	(3)	2X4	HF	#2	(4)	2X4	HF	#2

2x4 OPENING SCHEDULE HF#2 @ 10'-6" MAX HEIGHT

MAX WALL HEIGHT	OPENING SIZE	EXT FINISH	HEADER				SILL				FULL HEIGHT KING STUD			
			NUMBER	SIZE	LUMBER	TYPE	NUMBER	SIZE	LUMBER	TYPE	NUMBER	SIZE	LUMBER	TYPE
12'-2" MAX	3070	NO PLASTER	(1)	2X4	HF	#2	(1)	2X4	HF	#2	(2)	2X4	HF	#2
	4070	NO PLASTER	(1)	2X4	HF	#2	(1)	2X4	HF	#2	(2)	2X4	HF	#2
	6040	NO PLASTER	(2)	2X4	HF	#2	(2)	2X4	HF	#2	(3)	2X4	HF	#2
	8040	NO PLASTER	(2)	2X4	HF	#2	(2)	2X4	HF	#2	(4)	2X4	HF	#2

2x4 OPENING SCHEDULE HF#2 @ 12'-2" MAX HEIGHT

MAX WALL HEIGHT	OPENING SIZE	EXT FINISH	HEADER				SILL				FULL HEIGHT KING STUD			
			NUMBER	SIZE	LUMBER	TYPE	NUMBER	SIZE	LUMBER	TYPE	NUMBER	SIZE	LUMBER	TYPE
12'-2" MAX	3070	NO PLASTER	(1)	2X4	DF	#2	(1)	2X4	DF	#2	(2)	2X4	DF	#2
	4070	NO PLASTER	(1)	2X4	DF	#2	(1)	2X4	DF	#2	(2)	2X4	DF	#2
	6040	NO PLASTER	(2)	2X4	DF	#2	(2)	2X4	DF	#2	(3)	2X4	DF	#2

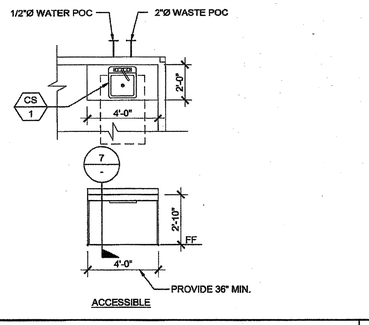

TYPICAL SINK CABINET 11

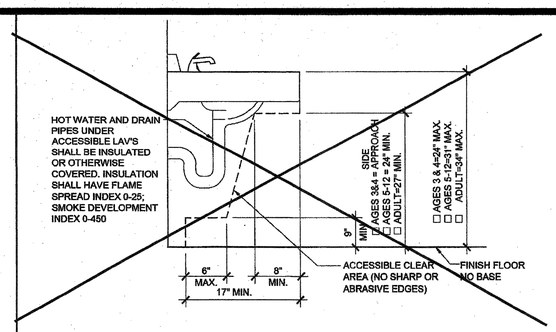

ACCESSIBLE LAV CLEARANCE SCALE: N.T.S. 6

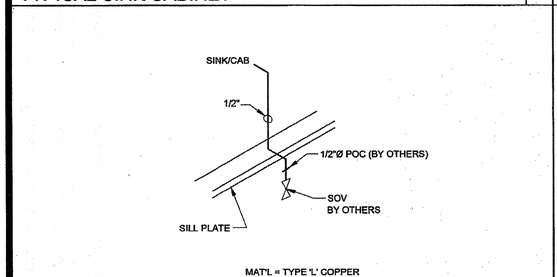

SINK CABINET COLD WATER SUPPLY SCALE: N.T.S. 12

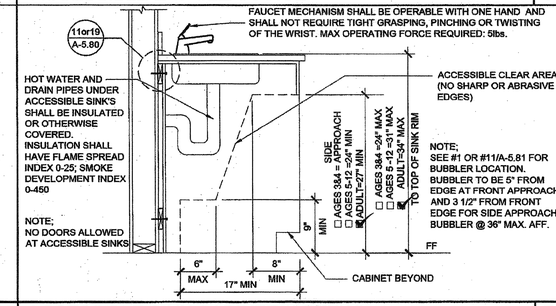

ACCESSIBLE SINK CABINET (OPTION) SCALE: N.T.S. 7

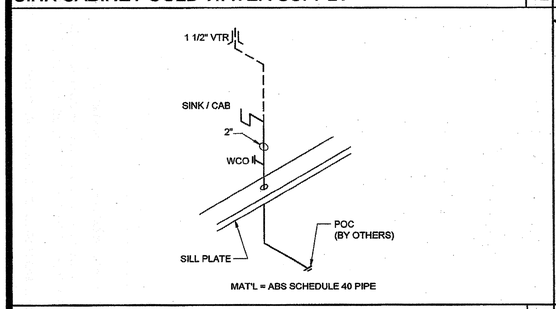

SINK CABINET WASTE 13

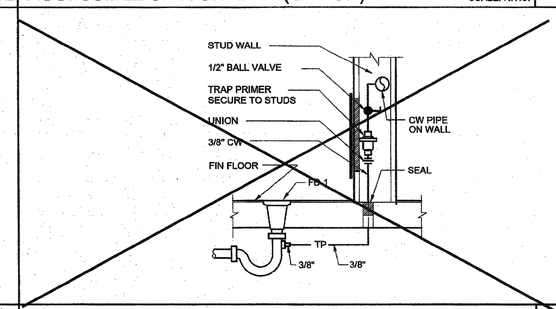

TRAP PRIMER TO FLOOR DRAIN SCALE: N.T.S. 8

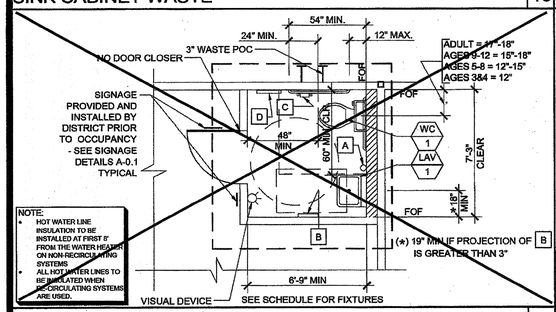

TYPICAL TOILET ROOM PLAN 14

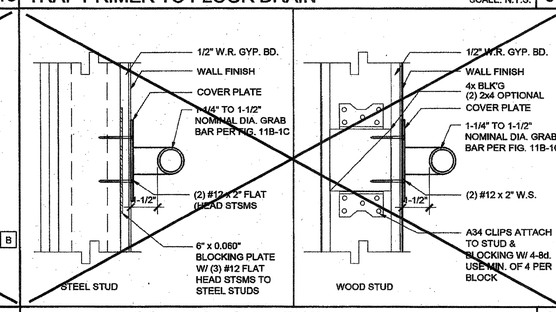

GRAB BAR CONNECTION DETAIL 9

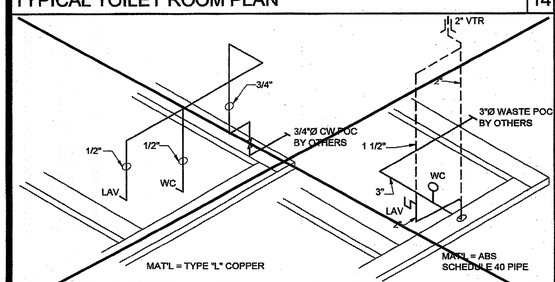

TOILET ROOM COLD WATER SUPPLY AND WASTE 15

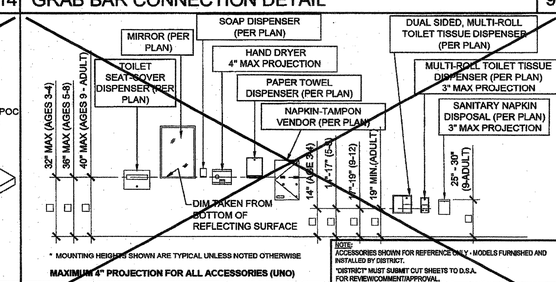

TOILET ACCESSORIES MOUNTING HEIGHTS 10

THE DIVISION OF THE STATE ARCHITECT, OFFICE OF REGULATION SERVICES ACCEPTS THE FOLLOWING DIMENSIONS AS ADEQUATELY SERVING THE NEEDS OF CHILDREN IN PROJECTS UNDER THEIR JURISDICTION. THESE DIMENSIONS ARE BASED ON CBC TABLE 11B-604.9 SUGGESTED DIMENSIONS FOR WATER CLOSETS SERVING CHILDREN AGES 3 TO 12.

ACCESSIBILITY DIMENSIONS	11B-604.9 SUGGESTED DIMS			
	ADULT	AGES 9 THROUGH 12	AGES 5 THROUGH 8	AGES 3 AND 4
TOILET CENTERING FROM WALL	17" - 18"	15" - 18"	12" - 15"	12"
TOILET SEAT HEIGHT (DIM TO TOP OF SEAT)	17" - 18"	15" - 17"	12" - 15"	11" - 12"
GRAB BAR HEIGHT (TO TOP)	33" - 36"	25" - 27"	20" - 25"	18" - 20"
TOILET PAPER IN FRONT OF TOILET	7" - 9"	7" - 9"	7" - 9"	7" - 9"
NAPKIN DISPOSAL IN FRONT OF TOILET	12" MAX.	12" MAX.	N/A	N/A
MIRROR HEIGHT (TO BOTTOM OF GLASS)	40" MAX.	40" MAX.	36" MAX.	32" MAX.
DISPENSER HEIGHT	19" MIN.	17" - 19"	14" - 17"	11"
LAVATORY/SINK TOP HEIGHT	34" MAX.	31" MAX.	31" MAX.	24" MAX.
LAVATORY/SINK KNEE CLEARANCE	27" MIN.	24" MIN.	24" MIN.	SIDE APPROACH
URINAL LIP HEIGHT	17" MAX.	17" MAX.	15" MAX.	15" MIN.
URINAL FLUSH HANDLE HEIGHT	44" MAX.	44" MAX.	37" MAX.	32" MAX.
DRINKING FOUNTAIN BUBBLER HT. (LOW)	36" MAX.	30" MAX.	30" MAX.	30" MAX.
DRINKING FOUNTAIN KNEE CLEARANCE	27" MIN.	SIDE APPROACH	SIDE APPROACH	SIDE APPROACH
RAMP/STAIR HANDRAIL HEIGHT (TO TOP)	34" - 38"	34" - 38"	34" - 38"	34" - 38"

STANDARD DIMENSIONS	ALTERNATE HEIGHT (DIMS)			
	ADULT	AGES 9 THROUGH 12	AGES 5 THROUGH 8	AGES 3 AND 4
TOILET CENTERING FROM WALL/PARTITION	15" MIN	15" MIN	15" MIN	15" MIN
TOILET SEAT HEIGHT/DIM TO TOP OF SEAT	15"	15"	15"	15"
TOILET CLEARANCE/FRONT	24"	24"	24"	24"
URINAL LIP HEIGHT	24"	24"	18"	16"
URINAL CENTER FROM WALL/PARTITION	12"	12"	12"	12"

PLUMBING ACCESSORIES (REF. ONLY - MODELS FURNISHED AND INSTALLED BY DISTRICT U.N.O.)

- A — SOAP DISPENSER: LIQUID SOAP DISPENSER 4" MAX. PROJECTION
- B — PAPER TOWEL DISPENSER/TRASH BIN COMBO: SURFACE MOUNTED 4" MAX. PROJECTION-CANNOT ENCROACH INTO 30x48 CLEAR SPACE OF FIXTURE
- C — TOILET PAPER HOLDER: SINGLE ROLL SEMI-RECESSED OR 3" MAX PROJECTION
- D — TOILET SEAT DISPENSER: SURFACE MOUNTED

* 44" MAX. PER CODE
[A] = ADULT; [E] = AGES 9-12; [K] = AGES 3-8

FIXTURE MOUNTING HEIGHTS 2

		COLD WATER	HOT WATER	WASTE	VENT	FIXTURE DESCRIPTION (AS CALLED OUT OR APPROVED EQUAL)
WC 7	[AGE 9-12] WATER CLOSET TANK TYPE (ACCESSIBLE)	1/2"		3"	2"	STD: PROFLO PF1704BB (1.28 GPF) ALT: AMERICAN STANDARD 2615.016 BABY DEVORO 10" HIGH, 10" ROUGH-IN, VITREOUS CHINA ELONGATED RIM, TANK TYPE; CHURCH #L2145ST (2" LIFT) SOLID OPEN WHITE ELONGATED PLASTIC SEAT
WC 8	[AGE 3-4] WATER CLOSET FLOOR MTD/FLUSH (ACCESSIBLE)	1"	-	3"	2"	AMERICAN STANDARD 2599.001 MADERA YOUTH (1.28 GPF) 14" HIGH, VITREOUS CHINA ELONGATED RIM, SIPHON JET, 10" ROUGH-IN; OLSONITE 10SSCTFR ELONGATED WHITE PLASTIC SEAT; SLOAN ROYAL #111-1.28 LOW CONSUMPTION FLUSHOMETER VALVE

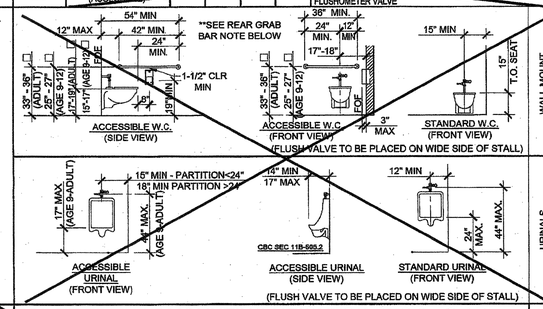

TOILET FIXTURE MOUNTING HEIGHTS(AGES 9 TO ADULT) 3

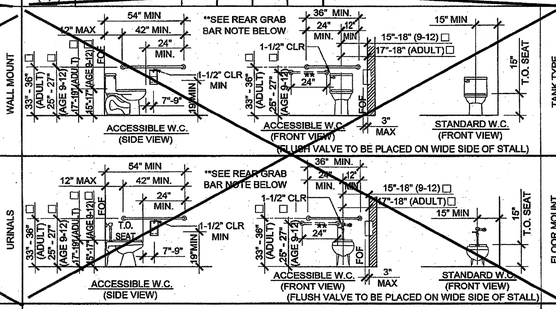

TOILET FIXTURE MOUNTING HEIGHTS(AGES 9 TO ADULT) 16

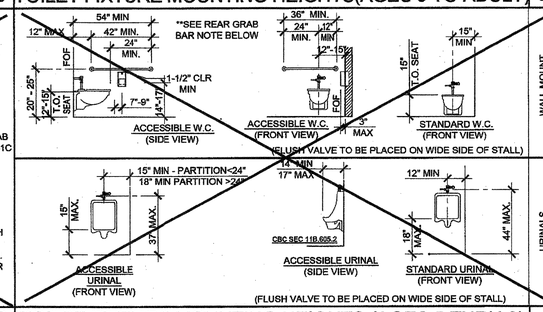

TOILET FIXTURE MOUNTING HEIGHTS (AGES 5 THRU 8) 4

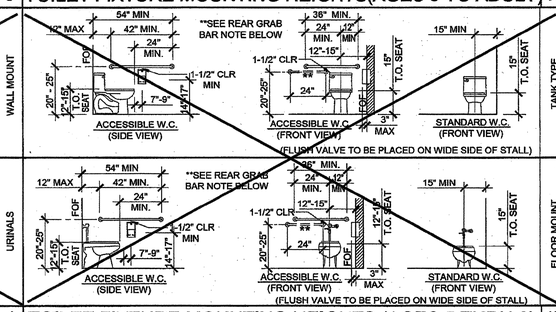

TOILET FIXTURE MOUNTING HEIGHTS (AGES 5 THRU 8) 17

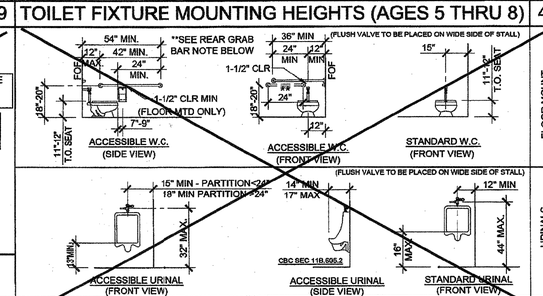

TOILET FIXTURE MOUNTING HEIGHTS (AGES 3 AND 4) 5

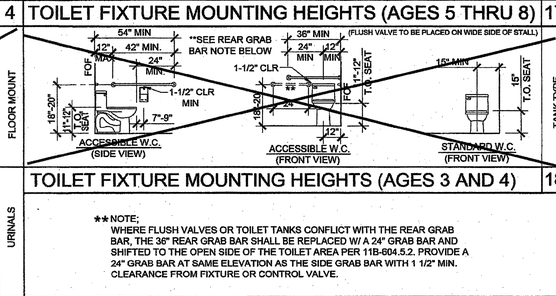

TOILET FIXTURE MOUNTING HEIGHTS (AGES 3 AND 4) 18

**NOTE;
WHERE FLUSH VALVES OR TOILET TANKS CONFLICT WITH THE REAR GRAB BAR, THE 36" REAR GRAB BAR SHALL BE REPLACED W/ A 24" GRAB BAR AND SHIFTED TO THE OPEN SIDE OF THE TOILET AREA PER 11B-604.5.2. PROVIDE A 24" GRAB BAR AT SAME ELEVATION AS THE SIDE GRAB BAR WITH 1 1/2" MIN. CLEARANCE FROM FIXTURE OR CONTROL VALVE.

PLUMBING FIXTURE SCHEDULE

SYMBOL	FIXTURE	COLD WATER	HOT WATER	WASTE	VENT	FIXTURE DESCRIPTION (AS CALLED OUT OR APPROVED EQUAL)
WC 1	[ADULT] WATER CLOSET TANK TYPE (ACCESSIBLE)	1/2"		3"	2"	STD: PROFLO ADA PF9403 (1.28 GPF) ALT: AMERICAN STANDARD ADA 2758.128, 17 HIGH, VITREOUS CHINA ELONGATED RIM, TANK TYPE; 12" ROUGH-IN; OLSONITE 10CC SOLID OPEN WHITE ELONGATED PLASTIC SEAT
WC 2	[AGE 9-12] WATER CLOSET TANK TYPE (ACCESSIBLE)	1/2"		3"	2"	STD: PROFLO STANDARD PF3300 (1.28 GPF) ALT: AMERICAN STANDARD 2557.128 15" HIGH, VITREOUS CHINA ELONGATED RIM, TANK TYPE; 12" ROUGH-IN; OLSONITE 10CC SOLID OPEN WHITE ELONGATED PLASTIC SEAT
WC 3	[AGE 3-4] WATER CLOSET TANK TYPE (ACCESSIBLE & NON-ACCESSIBLE)	1/2"		3"	2"	STD: PROFLO PF1704BB (1.28 GPF) ALT: AMERICAN STANDARD 2315.016 BABY DEVORO 10" HIGH, 10" ROUGH-IN, VITREOUS CHINA ELONGATED RIM, TANK TYPE; OLSONITE 10CC SOLID OPEN WHITE ELONGATED PLASTIC SEAT
WC 4	[ADULT] WATER CLOSET FLOOR MTD/FLUSH (ACCESSIBLE)	1"		3"	2"	STD: PROFLO ADA PF1723 (1.28 GPF) ALT: AMERICAN STD ADA 3043.001 "MADERA" 16 3/4" HIGH, VITREOUS CHINA ELONGATED RIM, SIPHON JET, 10" ROUGH-IN; OLSONITE 10CC SOLID OPEN WHITE ELONGATED PLASTIC SEAT; SLOAN ROYAL #111-1.28 LOW CONSUMPTION FLUSHOMETER VALVE
WC 5	[AGE 9-12] WATER CLOSET FLOOR MTD/FLUSH (ACCESSIBLE)	1"		3"	2"	STD: PROFLO STANDARD PF1721 (1.28 GPF) ALT: AMERICAN STANDARD 2234.001 MADERA 14" HIGH, VITREOUS CHINA ELONGATED RIM, SIPHON JET, 12" ROUGH-IN; OLSONITE 10CC SOLID OPEN WHITE ELONGATED PLASTIC SEAT; SLOAN ROYAL #111-1.28 LOW CONSUMPTION FLUSHOMETER VALVE
WC 6	[AGE 3 & 4] WATER CLOSET FLOOR MTD/FLUSH (ACCESSIBLE & NON-ACCESSIBLE)	1"		3"	2"	STD: PROFLO PF1706BB (1.28 GPF) ALT: AMERICAN STANDARD BABY DEVORO 2282.010 VITREOUS CHINA ELONGATED RIM, 10" ROUGH-IN LOW CONSUMPTION CLOSET BOWL; OLSONITE 126CC SOLID OPEN WHITE ELONGATED PLASTIC SEAT; SLOAN ROYAL #111-1.28 LOW CONSUMPTION FLUSH VALVE
LAV 1	LAVATORY (ACCESSIBLE)	1/2"		2"	1-1/2"	STD: AMERICAN STANDARD 0355.012 LUCERNE ALT: CRANE 1412-20 "HARWICH" 20X16 VITREOUS CHINA LAV 2 SHIFT 1/2" CONCEALED HANGER; OLYMPIA #L5161 SINGLE HANDLE FAUCET (AMERICAN STANDARD 9141.011 TO BE USED @ KINDER & ELEMENTARY APPLICATIONS ONLY) (0.5 GPM)
FD 1	FLOOR DRAIN			2"	1 1/2"	JAY R SMITH #2005YA-07-P050 NB - FLOOR DRAIN TRAPPED 5" x 5" DIAMETER, 5" NICKEL BRONZE STRAINER w/ 1/2" MAX GRATE OPENINGS IN ALL DIRECTIONS
TP 1	TRAP PRIMER	1/2"				PR-500 WITH 8"x12" LOCKABLE BOX, 1/2" BALL SHUT OFF VALVE, AND PP7 DU-O FRESH WATER DISTRIBUTION SYSTEM
GB 1	GRAB BAR					BOBRICK B-6806-1-1/2 OC STAINLESS STEEL GRAB BAR, SATIN FINISH, 36" LONG ON BACK AND 42" ON SIDE. OPTIONAL 24" BAR IN TOILETS CONVERTED TO ADULT
MR 1	MIRROR					SERIES 530 RETURNED MIRRORS STAINLESS STEEL - 304L 16 GA. ** SHEET METAL MANUFACTURED OR APPROVED EQUAL
CS 1	CLASSROOM SINK	1/2"	1/2"	2"	1 1/2"	JUST CRA-1725-A-GR 17"x25" w/ 4 1/2" BOWL DEPTH, WITH CHICAGO FAUCET #350 AND BUBBLER JSB-10
WH 1	WATER HEATER	3/4"	3/4"			☐ A.O. SMITH #DEL-6 (6 GALLON) ☐ A.O. SMITH #DEL-10 (10 GALLON)
WH 2	INSTANT WATER HEATER	1/2"	1/2"			EMAX ISP-301Z, 120V, 3.0KW, 25A
DF 1	DRINKING FOUNTAIN	1/2"		2"	1-1/2"	HALSEY-TAYLOR LR-LEVEL TRADESPEL C / COOLING TYPE

THESE DRAWINGS AND ALL MATERIAL CONTAINED HEREIN ARE THE PROPERTY OF SILVERCREEK INDUSTRIES, INC (SCI Inc) AND SHALL NOT BE REPRODUCED, COPIED OR OTHERWISE DISPOSED OF DIRECTLY OR INDIRECTLY AND SHALL NOT BE USED IN WHOLE OR IN PART TO ASSIST IN THE MAKING OF OR FOR THE PURPOSE OF FURNISHING ANY INFORMATION FOR THE MAKING OF DRAWINGS, PRINTS, APPARATUS OR PARTS THEREOF WITHOUT THE FULL KNOWLEDGE AND WRITTEN CONSENT OF SCI Inc.
ALL PATENTABLE MATERIAL CONTAINED HEREIN AND ORIGINATING WITH SCI Inc SHALL BE THE PROPERTY OF SCI Inc

SILVER CREEK INDUSTRIES, INC.

"BUILDING FOR THE NEXT GENERATION"

SILVER CREEK

2830 BARRETT AVE PERRIS, CALIFORNIA 92571
PHONE: 951-943-5393 FAX: 951-943-2211

PROJECT NAME:

24x40 STOCKPILE OFFICE BUILDING

SHEET TITLE:

PLUMBING DETAILS AND SCHEDULE

LICENSED ARCHITECT
JAGE F. SHIVELY III
C-33467
REN 01-31-2017
STATE OF CALIFORNIA

ARCHITECT OF RECORD SUBMISSION DATE

FILE #: 15-6
IDENTIFICATION STAMP
DIV. OF THE STATE ARCHITECT
OFFICE OF REGULATION SERVICES
03-118270
AC FLS SS OL
DATE NOV - 9 2017
TRACKING #: 53221-290

PROJECT SPECIFIC STATE AGENCY APPROVAL

IDENTIFICATION STAMP
DIV. OF THE STATE ARCHITECT
04 116284
ACS FLS SS RAE
DATE MAY 18 2017

ORIGINAL PC STATE AGENCY APPROVAL

PRE-CHECK (PC) DOCUMENT CODE 2013 CBC
A SEPARATE REQUEST APPLICATION FOR CONSTRUCTION IS REQUIRED

IDENTIFICATION STAMP
DIV. OF THE STATE ARCHITECT
OFFICE OF REGULATION SERVICES
PC 04-114102
AC FLS SS RAE
DATE AUG - 4 2015

REVISIONS

1
2
3
4
5
6
7

SILVER CREEK INDUSTRIES
24' x 40' PC - 2:12 PITCH

PROJECT NO:	
DRAWN BY:	
SCALE:	AS NOTED
DATE:	01-30-15
P.C. SHEET NUMBER	P-1.01

REFER TO SHEET "P-1.01N" FOR PROJECT SPECIFIC

LEGEND

SYMBOL	ABB.	DESCRIPTION
	SAD	SUPPLY AIR DUCT
	RAD	RETURN AIR DUCT
	EAD	EXHAUST AIR DUCT
	(L)	LINED DUCTWORK
	CD	SUPPLY CEILING DIFFUSER
	CR	RETURN CEILING REGISTER
	ER	EXHAUST CEILING REGISTER
	VTR	VENT THRU ROOF
	FD	FIRE DAMPER
	MVD	MANUAL VOLUME DAMPER
UC	UC	UNDERCUT DOOR
T	STAT	THERMOSTAT
BT	BT	BYPASS TIMER
	P.O.C	POINT OF CONNECTION

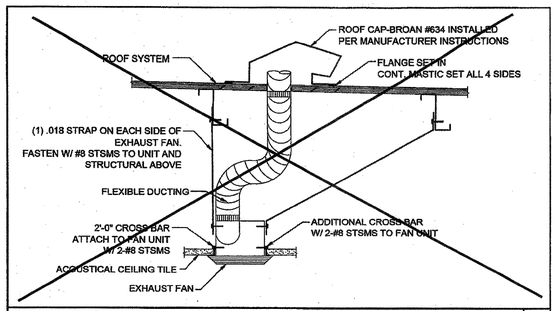

EXHAUST FAN INSTALLATION — SCALE : 1"=1'-0"

CEILING MOUNTED EXHAUST FAN SCHEDULE

SYM.	LOCATION	SERVICE	MANUF.	MODEL	CFM	SONES	SP	ELECTRICAL VOLTS	ELECTRICAL Ø	ELECTRICAL POWER	WGT.	REMARKS
EF 1	CEILING	TOILET EXHAUST	BROAN*	676	100	4.0	0.25	120	1	156 WATTS	7 LBS.	WITH BROAN ROOF CAP #636. PROVIDE 4" DIA. EXHAUST DUCT UP TO ROOF. INTERLOCK WITH LIGHT SWITCH.
EF 2	CEILING	TOILET EXHAUST	BROAN*	L100	109	1.0	0.25	120	1	97 WATTS	22.80 LBS.	WITH BROAN ROOF CAP #634. PROVIDE 6" DIA. EXHAUST DUCT UP TO ROOF. INTERLOCK WITH LIGHT SWITCH.
EF 3	CEILING	TOILET EXHAUST	BROAN*	L200	210	2.0	0.25	120	1	127 WATTS	23.0 LBS.	WITH BROAN ROOF CAP #634. PROVIDE 8" DIA. EXHAUST DUCT UP TO ROOF. INTERLOCK WITH LIGHT SWITCH.
EF 4	CEILING	TOILET EXHAUST	BROAN*	L300	308	2.8	0.25	120	1	212 WATTS	23.10 LBS.	WITH BROAN ROOF CAP #634. PROVIDE 8" DIA. EXHAUST DUCT UP TO ROOF. INTERLOCK WITH LIGHT SWITCH.

OR APPROVED EQUAL.

PERFORATED FACE GRILLE SCHEDULE (SUPPLY)

ITEM	NECK SIZE	RANGE CFM	MFG & MODEL #
T-BAR SUPPLY 16X16-4W	6"Ø	0 - 150	Fixed Curve Blade, 4-way throw
	8"Ø	150 - 230	For lay-in T-bar ceilings use Harth & Cooley SD-9419 . (Sizes as shown on Mech Plan)
	10"Ø	230 - 350	
	12"Ø	350 - 460	
	14"Ø	460 - 640	

PERFORATED FACE GRILLE SCHEDULE (RETURN)

ITEM	NECK SIZE	RANGE CFM	MFG & MODEL #
T-BAR RETURN	6"Ø	0 - 230	Perforated face
	10"Ø	230 - 460	For lay-in T-bar ceilings use Shoemaker 105P with 24 ga., 45 deg. angle. (Sizes as shown on Mech Plan.)
	14"Ø	460 - 710	

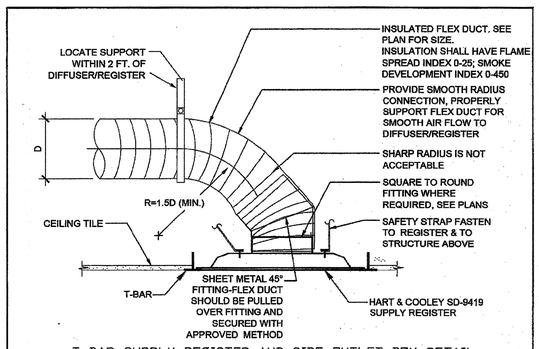

T-BAR SUPPLY REGISTER AND SIDE OUTLET BOX DETAIL

N.T.S.

SUPPLY CEILING DIFFUSER MOUNTING — SCALE: NONE — D

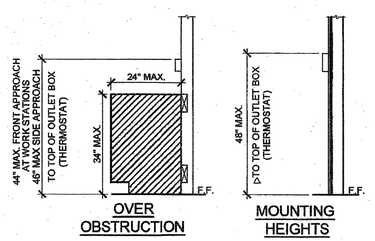

OVER OBSTRUCTION — MOUNTING HEIGHTS

△ PROVIDE MIN 30"x48" CLR
△ PROVIDE MIN 36"x48" CLR
THERE IS NO SIDE OR FRONT APPROACH PERPENDICULAR APPROACH AT EACH OBSTRUCTION AT EACH LOCATION

GENERAL NOTES

ALL MECHANICAL, PLUMBING AND ELECTRICAL COMPONENTS SHALL BE ANCHORED AND INSTALLED PER THE DETAILS ON THE DSA APPROVED CONSTRUCTION DOCUMENTS. WHERE NO DETAIL IS INDICATED, THE FOLLOWING COMPONENTS SHALL BE ANCHORED OR BRACED TO MEET THE FORCE AND DISPLACEMENT REQUIREMENTS PRESCRIBED IN THE 2013 CBC, SECTIONS 1616A.1.18 THROUGH 1616A.1.26 AND ASCE 7-10 CHAPTER 13, 26 AND 30.

1. ALL PERMANENT EQUIPMENT AND COMPONENTS.
2. TEMPORARY OR MOVABLE EQUIPMENT THAT IS PERMANENTLY ATTACHED (E.G. HARD WIRED) TO THE BUILDING UTILITY SERVICES SUCH AS ELECTRICITY, GAS OR WATER.
3. MOVABLE EQUIPMENT WHICH IS STATIONED IN ONE PLACE FOR MORE THAN 8 HOURS AND HEAVIER THAN 400 POUNDS ARE REQUIRED TO BE ANCHORED WITH TEMPORARY ATTACHMENTS.

THE FOLLOWING MECHANICAL AND ELECTRICAL COMPONENTS SHALL BE POSITIVELY ATTACHED TO THE STRUCTURE, BUT NEED NOT BE DETAILED ON THE PLANS. THESE COMPONENTS SHALL HAVE FLEXIBLE CONNECTIONS PROVIDED BETWEEN THE COMPONENT AND ASSOCIATED DUCTWORK, PIPING, AND CONDUIT.

A. COMPONENTS WEIGHING LESS THAN 400 POUNDS AND HAVE A CENTER OF MASS LOCATED 4 FEET OR LESS ABOVE THE ADJACENT FLOOR OR ROOF LEVEL THAT DIRECTLY SUPPORT THE COMPONENT.
B. COMPONENTS WEIGHING LESS THAN 20 POUNDS, OR IN THE CASE OF DISTRIBUTED SYSTEMS, LESS THAN 5 POUNDS PER FOOT, WHICH ARE SUSPENDED FROM A ROOF OR FLOOR OR HUNG FROM A WALL.

FOR THOSE ELEMENTS THAT DO NOT REQUIRE DETAILS ON THE APPROVED DRAWINGS, THE INSTALLATION SHALL BE SUBJECT TO THE APPROVAL OF THE STRUCTURAL ENGINEER OF RECORD AND THE DSA DISTRICT STRUCTURAL ENGINEER. THE PROJECT INSPECTOR WILL VERIFY THAT ALL COMPONENTS AND EQUIPMENT HAVE BEEN ANCHORED IN ACCORDANCE WITH ABOVE REQUIREMENTS.

PIPING, DUCTWORK AND ELECTRICAL DISTRIBUTION SYSTEM BRACING NOTE

PIPING, DUCTWORK AND ELECTRICAL DISTRIBUTION SYSTEMS SHALL BE BRACED TO COMPLY WITH THE FORCES AND DISPLACEMENTS PRESCRIBED IN ASCE 7-10 SECTION 13.3 AS DEFINED IN ASCE 7-10 SECTION 13.6.8, 13.6.7, 13.6.5.6 AND 2013 CBC SECTIONS 1616A.1.23, 1616A.1.24, 1616A.1.25 AND 1616A.1.26.

THE BRACING AND ATTACHMENTS TO THE STRUCTURE SHALL BE DETAILED ON THE APPROVED DRAWINGS OR THEY SHALL COMPLY WITH ONE OF THE OSHPD PRE-APPROVALS (OPA #).

COPIES OF THE BRACING SYSTEM INSTALLATION GUIDE OR MANUAL SHALL BE AVAILABLE ON THE JOBSITE PRIOR TO THE START OF HANGING AN BRACING OF THE PIPE, DUCTWORK AND ELECTRICAL DISTRIBUTION SYSTEMS.

THE STRUCTURAL ENGINEER OF RECORD SHALL VERIFY THE ADEQUACY OF THE STRUCTURE TO SUPPORT THE HANGER AND BRACE LOADS.

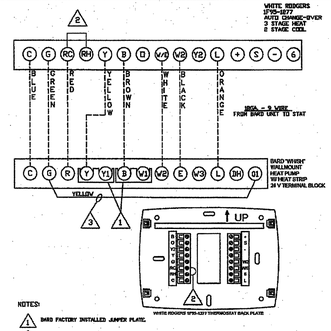

UNIT TO THERMOSTAT WIRING — SCALE: NONE — A

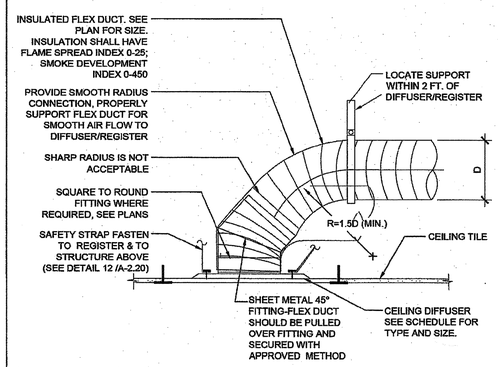

RETURN CEILING DIFFUSER MOUNTING — SCALE: NONE — B

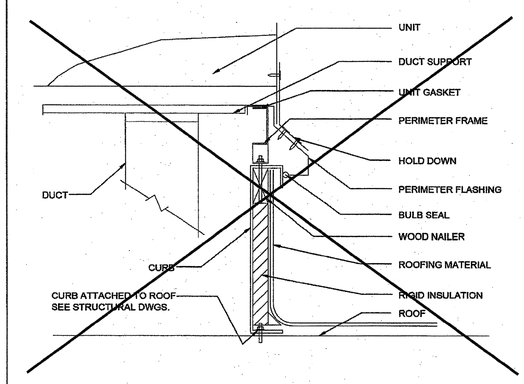

A/C UNIT MOUNTING — SCALE: NONE — C

BUILDING SIZES VARY. SEE KEY PLANS ON SHEET A-0.3 FOR APPROPRIATE HVAC TONNAGE PER BUILDING SIZE.

THESE DRAWINGS AND ALL MATERIAL CONTAINED HEREIN ARE THE PROPERTY OF SILVERCREEK INDUSTRIES, INC (SCI Inc) AND SHALL NOT BE REPRODUCED, COPIED OR OTHERWISE DISPOSED OF DIRECTLY OR INDIRECTLY AND SHALL NOT BE USED IN WHOLE OR IN PART TO ASSIST IN THE MAKING OF OR FOR THE PURPOSE OF FURNISHING ANY INFORMATION FOR THE MAKING OF DRAWINGS, PRINTS, APPARATUS OR PARTS THEREOF WITHOUT THE FULL KNOWLEDGE AND WRITTEN CONSENT OF SCI Inc.
ALL PATENTABLE MATERIAL CONTAINED HEREIN AND ORIGINATING WITH SCI Inc SHALL BE THE PROPERTY OF SCI Inc

SILVER CREEK INDUSTRIES, INC.
"BUILDING FOR THE NEXT GENERATION"
SILVER CREEK
2830 BARRETT AVE PERRIS, CALIFORNIA 92571
PHONE: 951-943-5393 FAX: 951-943-2211

PROJECT NAME:

24x40 STOCKPILE OFFICE BUILDING

SHEET TITLE:

MECHANICAL NOTES, SCHEDULES, & DETAILS

LICENSED ARCHITECT — CHRIS S. SILVERLY III — C-33467 — REN 01-31-2017 — STATE OF CALIFORNIA

ARCHITECT OF RECORD SUBMISSION DATE

FILE #: 15-6
IDENTIFICATION STAMP
DIV. OF THE STATE ARCHITECT
OFFICE OF REGULATION SERVICES
03-118270
AC FLS SS CL
DATE NOV - 8 2017
TRACKING #: 63221-290

PROJECT SPECIFIC STATE AGENCY APPROVAL

IDENTIFICATION STAMP
DIV. OF THE STATE ARCHITECT
04 118284 1.
ACS FLS SS RAF
DATE MAY - 1 2017

ORIGINAL PC STATE AGENCY APPROVAL

PRE-CHECK (PC) DOCUMENT CODE 2013 CBC
A SEPARATE PROJECT APPLICATION WILL BE SUBMITTED WHEN REQUIRED

IDENTIFICATION STAMP
DIV. OF THE STATE ARCHITECT
OFFICE OF REGULATION SERVICES
PC 04-114102
AC FLS SS RAF
DATE AUG - 4 2015

REVISIONS
1
2
3
4
5
6
7
8

SILVER CREEK INDUSTRIES
24' x 40' PC - 2:12 PITCH

PROJECT NO:	
DRAWN BY:	
SCALE:	AS NOTED
DATE:	01-30-15

P.C. SHEET NUMBER

M-0.1

NOT USED 2

NOT USED 3

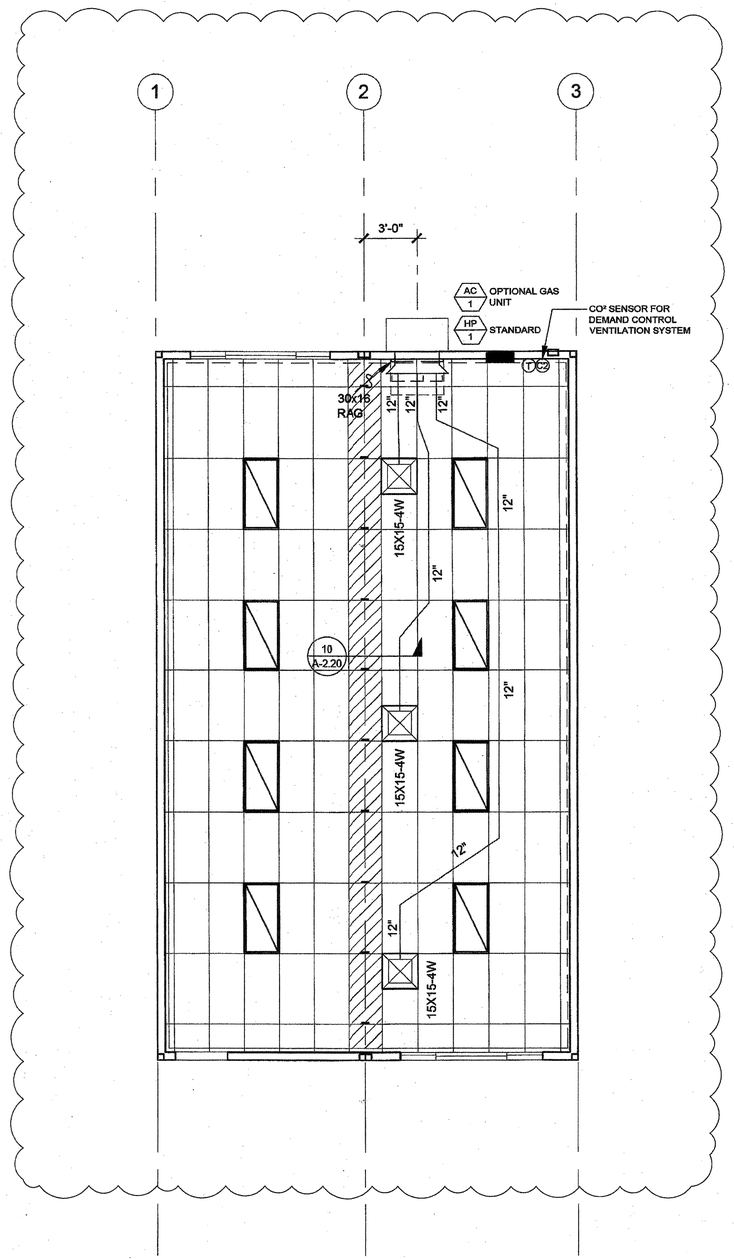

MECHANICAL PLAN - STANDARD 4 LIGHT CONFIGURATION

SCALE: 1/4" = 1'-0" 1

9 EER

SINGLE PACKAGE VERTICAL HEAT PUMP SCHEDULE

	STANDARD	OPTION #1	OPTION #2
TAG	HP-1	HP-1	HP-1
NOMINAL TONNAGE	4.0 TONS	5 TONS	3.5 TONS
MANUFACTURER	BARD	BARD	BARD
MODEL#	W48H2-A04	W60H2-A05	W42H2-A04
CFM	1550	1700	1400
STATIC PRESSURE	0.3	0.3	0.3
DRIVE	DIRECT	DIRECT	DIRECT
MCA	58	67	57
MOCP	60	80	60
VOLTAGE	208/230-1	208/230-1	208/230-1
WIRE SIZE (PWR/GRND)	#6/#10	#4/#8	#6/#10
DESIGN RETURN AIR (DB/WB)	80/67	80/67	80/67
SENSIBLE COOLING @ 95° F	35,600	39,600	32,700
TOTAL COOLING @ 95° F	46,000	54,000	42,000
HEATING CAP. BTUH @ 47° F	44,000	54,000	42,000
HEATING CAP. BTUH @ 17° F	26,000	32,000	25,000
OPERATING WEIGHT	550#	580#	550#
EER	9.00	9.00	9.00
COP @ 47° F	3.00	3.00	3.00
COP @ 17° F	2.00	2.00	2.00

NOTES:
PROVIDE SET-BACK THERMOSTAT.
MODEL# SHOWN IS FOR UNIT WITH OPTIONAL AUXILIARY HEAT STRIP, IF HEAT STRIP IS NOT USED THE MCA AND MOCP MUST BE REVISED. HEAT STRIPS LARGER THAN THE SIZE SHOWN MAY NOT BE USED.
MINIMUM OUTSIDE AIR SHALL BE NO LESS THAN 15 CFM PER EXPECTED OCCUPANT LOAD.
THE UNIT SHALL UTILIZE DEMAND CONTROL VENTILATION, THE CO2 SENSOR SHALL BE LOCATED SO THAT IT IS NOT EXPECTED TO BE OBSTRUCTED BY FURNITURE OR EQUIPMENT AND SHALL BE INSTALLED NO LESS THAN 36" AFF AND NO MORE THAN 72" AFF.
AIR HANDLERS WITH OTHER VOLTAGES SHALL BE ACCEPTABLE.
AIR HANDLERS OTHER THAN THE MAKE AND MODEL LISTED ABOVE SHALL BE ACCEPTABLE WHEN THE NOMINAL TONNAGE DOES NOT EXCEED 5 TONS AND THE EER AND COP VALUES ARE NO LESS THAN THOSE SHOWN ABOVE.

10 EER

SINGLE PACKAGE VERTICAL HEAT PUMP SCHEDULE

	STANDARD	OPTION #1	OPTION #2
TAG	HP-1	HP-1	HP-1
NOMINAL TONNAGE	4.0 TONS	5 TONS	3.5 TONS
MANUFACTURER	BARD	BARD	BARD
MODEL#	S49H2-A05	S61H2-A05	S43H2-A04
CFM	1400	1450	1250
STATIC PRESSURE	0.2	0.2	0.15
DRIVE	DIRECT	DIRECT	DIRECT
MCA	65	69	55
MOCP	70	80	60
VOLTAGE	208/230-1	208/230-1	208/230-1
WIRE SIZE (PWR/GRND)	#6/#10	#4/#8	#6/#10
DESIGN RETURN AIR (DB/WB)	80/67	80/67	80/67
SENSIBLE COOLING @ 95° F	34,400	37,900	31,200
TOTAL COOLING @ 95° F	46,000	55,000	41,500
HEATING CAP. BTUH @ 47° F	45,000	52,000	39,000
HEATING CAP. BTUH @ 17° F	26,000	30,000	23,000
OPERATING WEIGHT	550#	580#	550#
EER	10.00	10.40	10.50
COP @ 47° F	3.00	3.00	3.20
COP @ 17° F	2.00	2.00	2.10

NOTES:
PROVIDE SET-BACK THERMOSTAT.
MODEL# SHOWN IS FOR UNIT WITH OPTIONAL AUXILIARY HEAT STRIP, IF HEAT STRIP IS NOT USED THE MCA AND MOCP MUST BE REVISED. HEAT STRIPS LARGER THAN THE SIZE SHOWN MAY NOT BE USED.
MINIMUM OUTSIDE AIR SHALL BE NO LESS THAN 15 CFM PER EXPECTED OCCUPANT LOAD.
THE UNIT SHALL UTILIZE DEMAND CONTROL VENTILATION, THE CO2 SENSOR SHALL BE LOCATED SO THAT IT IS NOT EXPECTED TO BE OBSTRUCTED BY FURNITURE OR EQUIPMENT AND SHALL BE INSTALLED NO LESS THAN 36" AFF AND NO MORE THAN 72" AFF.
AIR HANDLERS WITH OTHER VOLTAGES SHALL BE ACCEPTABLE.
AIR HANDLERS OTHER THAN THE MAKE AND MODEL LISTED ABOVE SHALL BE ACCEPTABLE WHEN THE NOMINAL TONNAGE DOES NOT EXCEED 5 TONS AND THE EER AND COP VALUES ARE NO LESS THAN THOSE SHOWN ABOVE.

9 EER (GAS ALTERNATE)

SINGLE PACKAGE VERTICAL AIR CONDITIONER WITH GAS FURNACE

	STANDARD	OPTION #1	OPTION #2
TAG	AC-1	AC-1	AC-1
NOMINAL TONNAGE	4.0 TONS	5 TONS	3.5 TONS
MANUFACTURER	BARD	BARD	BARD
MODEL#	W48G2-AXB	W60G2-AXB	W42G2-AXB
CFM	1600	1750	1300
STATIC PRESSURE	0.2	0.2	0.2
DRIVE	DIRECT	DIRECT	DIRECT
MCA	38	40	32
MOCP	50	60	50
VOLTAGE	208/230-1	208/230-1	208/230-1
WIRE SIZE (PWR/GRND)	#6/#10	#6/#10	#6/#10
DESIGN RETURN AIR (DB/WB)	80/67	80/67	80/67
SENSIBLE COOLING @ 95° F	35,500	40,700	30,500
TOTAL COOLING @ 95° F	46,000	57,000	40,500
HEATING INPUT	75,000	75,000	75,000
HEATING OUTPUT	61,500	61,500	61,500
OPERATING WEIGHT	710#	725#	700#
EER	9.7	9.8	9.8
THERMAL EFFICIENCY (TE)	82	82	82

NOTES:
PROVIDE SET-BACK THERMOSTAT.
MINIMUM OUTSIDE AIR SHALL BE NO LESS THAN 15 CFM PER EXPECTED OCCUPANT LOAD.
THE UNIT SHALL UTILIZE DEMAND CONTROL VENTILATION, THE CO2 SENSOR SHALL BE LOCATED SO THAT IT IS NOT EXPECTED TO BE OBSTRUCTED BY FURNITURE OR EQUIPMENT AND SHALL BE INSTALLED NO LESS THAN 36" AFF AND NO MORE THAN 72" AFF.
AIR HANDLERS WITH OTHER VOLTAGES SHALL BE ACCEPTABLE.
AIR HANDLERS OTHER THAN THE MAKE AND MODEL LISTED ABOVE SHALL BE ACCEPTABLE WHEN THE NOMINAL TONNAGE DOES NOT EXCEED 5 TONS AND THE EER AND TE VALUES ARE NO LESS THAN THOSE SHOWN ABOVE.

THESE DRAWINGS AND ALL MATERIAL CONTAINED HEREIN ARE THE PROPERTY OF SILVERCREEK INDUSTRIES, INC (SCI Inc) AND SHALL NOT BE REPRODUCED, COPIED OR OTHERWISE DISPOSED OF DIRECTLY OR INDIRECTLY AND SHALL NOT BE USED IN WHOLE OR IN PART TO ASSIST IN THE MAKING OF OR FOR THE PURPOSE OF FURNISHING ANY INFORMATION FOR THE MAKING OF DRAWINGS, PRINTS, APPARATUS OR PARTS THEREOF WITHOUT THE FULL KNOWLEDGE AND WRITTEN CONSENT OF SCI Inc.
ALL PATENTABLE MATERIAL CONTAINED HEREIN AND ORIGINATING WITH SCI Inc SHALL BE THE PROPERTY OF SCI Inc

SILVER CREEK INDUSTRIES, INC.
"BUILDING FOR THE NEXT GENERATION"
SILVER CREEK
2830 BARRETT AVE PERRIS, CALIFORNIA 92571
PHONE: 951-943-5393 FAX: 951-943-2211

PROJECT NAME:

24x40 STOCKPILE OFFICE BUILDING

SHEET TITLE:

MECHANICAL PLAN
WALL MOUNT
24' x 40'

LICENSED ARCHITECT
JOE F. SHIVELY III
C-33467
REN 01-31-2017
STATE OF CALIFORNIA

ARCHITECT OF RECORD SUBMISSION DATE

FILE #: 15-6
IDENTIFICATION STAMP
DIV. OF THE STATE ARCHITECT
OFFICE OF REGULATION SERVICES
03-118270
AC FLS SS
DATE NOV - 9 2017
TRACKING #: 63221-290

PROJECT SPECIFIC STATE AGENCY APPROVAL

IDENTIFICATION STAMP
DIV. OF THE STATE ARCHITECT
04 116284
ACS FLS SS RAF
DATE MAY 18 2017

ORIGINAL PC STATE AGENCY APPROVAL

PRE-CHECK (PC) DOCUMENT
A SEPARATE PERMIT APPLICATION FOR CONSTRUCTION IS REQUIRED

IDENTIFICATION STAMP
DIV. OF THE STATE ARCHITECT
OFFICE OF REGULATION SERVICES
PC 04-114102
AC FLS SS RAF
DATE AUG - 4 2015

REVISIONS

1
2
3
4
5
6
7
8

SILVER CREEK INDUSTRIES
24' x 40' PC - 2:12 PITCH

PROJECT NO:
DRAWN BY:
SCALE: AS NOTED
DATE: 01-30-15

P.C. SHEET NUMBER

M-1.01

REFER TO SHEET "M-1.01N" FOR PROJECT SPECIFIC

NOT USED | 5

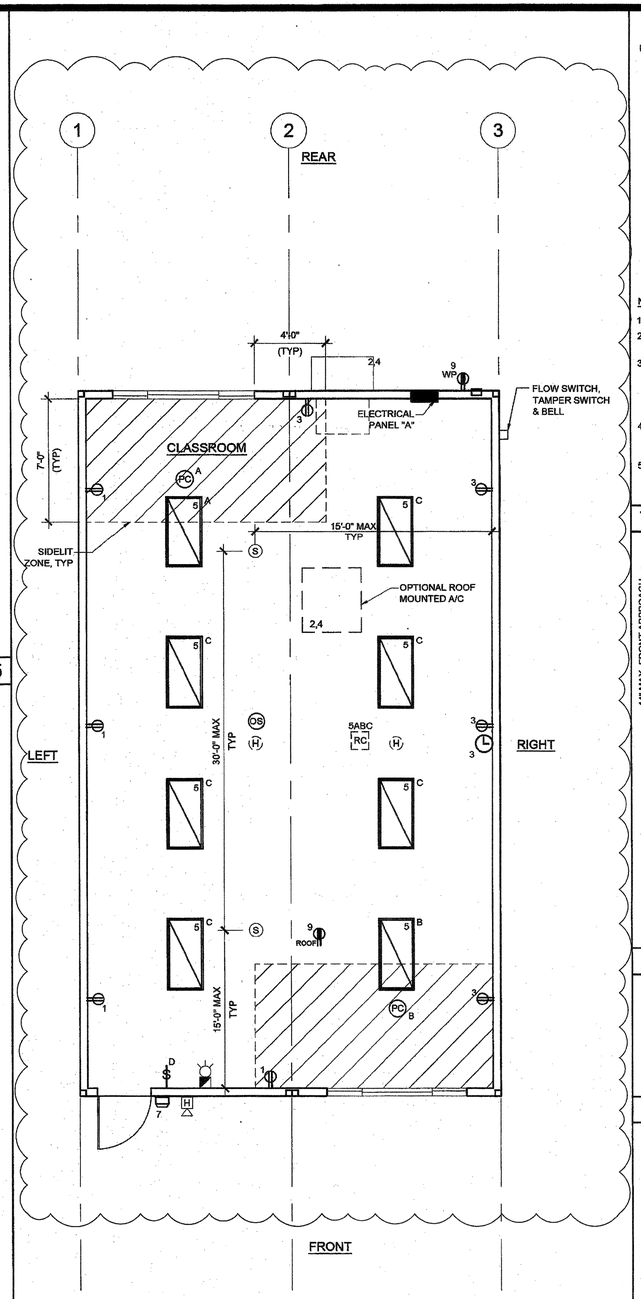

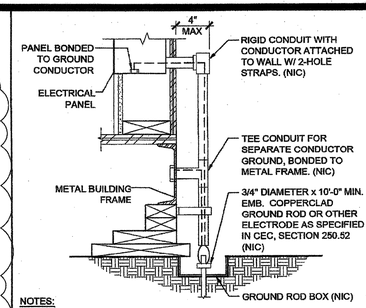

NOTES:

1. SIZE OF CONDUCTORS SHALL COMPLY WITH CEC TABLE 250.66
2. ELEC. TRADE SHALL CHECK AREA FOR EXISTING CONDUITS, SEWER, GAS & WATER PIPING BEFORE DRIVING GROUND RODS.
3. BOND SEPARATE CONDUCTORS FROM GROUND ROD TO ELEC'L. PANEL & TO METAL BUILDING FRAME (CEC 250.52) IN ADDITION TO THE DETAIL SHOWN ABOVE, BOND THE ELECTRICAL GROUND TO METAL UNDERGROUND WATER PIPE IN DIRECT CONTACT WITH THE EARTH FOR 10 FT. OR MORE, IF AVAILABLE (CEC 250.52)
4. ALL MODULES OF METAL FRAME BLDGS. SHALL BE ELECTRICALLY BONDED TOGETHER (BOLTING ONLY IS NOT ACCEPTABLE BONDING). BONDING SHALL INCLUDE METAL RAMP.
5. CHECK RESISTANT TO GROUND ROD, IF RESISTANCE EXCEEDS 25 OHMS, INSTALL ADDITIONAL GROUND RODS WITH CONDUCTORS AS SHOWN SEPARATED AT LEAST 6'-0" UNTIL RESISTANCE IS REDUCED TO 25 OHMS OR LESS (CEC 250.56).

TYPICAL GROUNDING DETAIL | 1

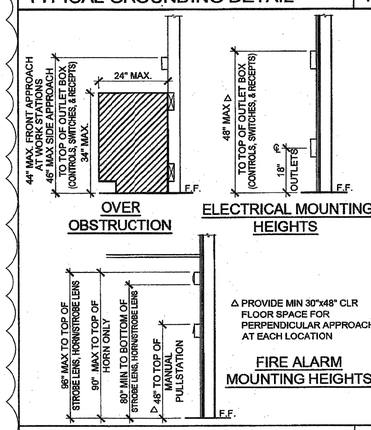

ACCESSIBLE HEIGHTS | 2

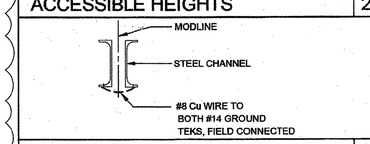

GROUND JUMPER AT MODLINE | 3

GENERAL GROUNDING NOTES

EACH BUILDING SHALL BE SEPARATELY GROUNDED WITH A 3/4" RD. X 8' COPPERCLAD STEEL GROUND ROD, WHERE ROCK BOTTOM IS ENCOUNTERED, ROD SHALL BE DRIVEN AT AN ANGLE NOT TO EXCEED 45 DEGREE'S FROM THE VERTICAL OR SHALL BE BURIED IN A TRENCH THAT IS AT LEAST 30" DEEP (BY SITE ELECTRICAL).

TESTING: TEST FOR RESISTANCE TO GROUND, IF RESISTANCE EXCEEDS 25 OHMS. INSTALL ADDITIONAL GROUND RODS SEPARATED AT LEAST 6'-0" UNTIL RESISTANCE IS REDUCES TO 25 OHMS OR LESS. (BY SITE ELECTRICAL).

APPROVAL OF THIS PLAN DOES NOT CONSTITUTE APPROVAL OF THIS FIRE ALARM FOR ALL SITES. THE FIRE ALARM SYSTEM AND/OR COMPONENTS MAYBE REQUIRED TO BE CHANGED DUE TO SITE LOCATION EXISTING CONDITIONS OR INCOMPATIBLE COMPONENTS.

GROUND MG TEST SHALL BE DONE IN THE PRESENCE OF THE PROJECT INSPECTOR. ALL GROUNDING SHALL BE IN ACCORDANCE WITH CEC ARTICLE 250.

SCHOOL EQUIPMENT ANCHORAGE

ALL MECHANICAL, PLUMBING AND ELECTRICAL COMPONENTS SHALL BE ANCHORED AND INSTALLED PER THE DETAILS ON THE DSA APPROVED CONSTRUCTION DOCUMENTS. WHERE NO DETAIL IS INDICATED, THE FOLLOWING COMPONENTS SHALL BE ANCHORED OR BRACED TO MEET THE FORCE AND DISPLACEMENT REQUIREMENTS PRESCRIBED IN THE 2013 CBC, SECTIONS 1616A.1.18 THROUGH 1616A.1.26 AND ASCE 7-10 CHAPTER 13, 26 AND 30.

1. ALL PERMANENT EQUIPMENT AND COMPONENTS.
2. TEMPORARY OR MOVABLE EQUIPMENT THAT IS PERMANENTLY ATTACHED (E.G. HARD WIRED) TO THE BUILDING UTILITY SERVICES SUCH AS ELECTRICITY, GAS OR WATER.
3. MOVABLE EQUIPMENT WHICH IS STATIONED IN ONE PLACE FOR MORE THAN 8 HOURS AND HEAVIER THAN 400 POUNDS ARE REQUIRED TO BE ANCHORED WITH TEMPORARY ATTACHMENTS.

THE FOLLOWING MECHANICAL AND ELECTRICAL COMPONENTS SHALL BE POSITIVELY ATTACHED TO THE STRUCTURE, BUT NEED NOT BE DETAILED ON THE PLANS. THESE COMPONENTS SHALL HAVE FLEXIBLE CONNECTIONS PROVIDED BETWEEN THE COMPONENT AND ASSOCIATED DUCTWORK, PIPING, AND CONDUIT.

A. COMPONENTS WEIGHING LESS THAN 400 POUNDS AND HAVE A CENTER OF MASS LOCATED 4 FEET OR LESS ABOVE THE ADJACENT FLOOR OR ROOF LEVEL THAT DIRECTLY SUPPORT THE COMPONENT.
B. COMPONENTS WEIGHING LESS THAN 20 POUNDS, OR IN THE CASE OF DISTRIBUTED SYSTEMS, LESS THAN 5 POUNDS PER FOOT, WHICH ARE SUSPENDED FROM A ROOF OR FLOOR OR HUNG FROM A WALL.

FOR THOSE ELEMENTS THAT DO NOT REQUIRE DETAILS ON THE APPROVED DRAWINGS, THE INSTALLATION SHALL BE SUBJECT TO THE APPROVAL OF THE STRUCTURAL ENGINEER OF RECORD AND THE DSA DISTRICT STRUCTURAL ENGINEER. THE PROJECT INSPECTOR WILL VERIFY THAT ALL COMPONENTS AND EQUIPMENT HAVE BEEN ANCHORED IN ACCORDANCE WITH ABOVE REQUIREMENTS.

PIPING, DUCTWORK AND ELECTRICAL DISTRIBUTION SYSTEM BRACING NOTE

PIPING, DUCTWORK AND ELECTRICAL DISTRIBUTION SYSTEMS SHALL BE BRACED TO COMPLY WITH THE FORCES AND DISPLACEMENTS PRESCRIBED IN ASCE 7-10 SECTION 13.3 AS DEFINED IN ASCE 7-10 SECTION 13.6.8, 13.6.7, 13.6.5.6 AND 2013 CBC SECTIONS 1616A.1.23, 1616A.1.24, 1616A.1.25 AND 1616A.1.26.

THE BRACING AND ATTACHMENTS TO THE STRUCTURE SHALL BE DETAILED ON THE APPROVED DRAWINGS OR THEY SHALL COMPLY WITH ONE OF THE OSHPD PRE-APPROVALS (OPA #).

COPIES OF THE BRACING SYSTEM INSTALLATION GUIDE OR MANUAL SHALL BE AVAILABLE ON THE JOBSITE PRIOR TO THE START OF HANGING AN BRACING OF THE PIPE, DUCTWORK AND ELECTRICAL DISTRIBUTION SYSTEMS.

THE STRUCTURAL ENGINEER OF RECORD SHALL VERIFY THE ADEQUACY OF THE STRUCTURE TO SUPPORT THE HANGER AND BRACE LOADS.

FIRE ALARM NOTES

1. SMOKE AND HEAT DETECTOR CONDUIT AND DEVICES PROVIDED AND INTERCONNECTED BY OTHERS TO FIRE ALARM SYSTEM
2. PROVIDE DEDICATED FIRE ALARM 120 VOLT CIRCUIT CONNECTED TO LOCKED-ON BREAKER. THE CIRCUIT BREAKER SHALL BE LOCKED-ON WITH APPROVED LOCKING DEVICE, MARKED RED AND IDENTIFIED AS "FIRE ALARM CONTROL CIRCUIT". NFPA 72, 10.6.5.2.

CONDUIT FILL AND CONDUCTOR CAPACITY TABLE

(ALL CONDUCTORS SHALL BE TYPE THHN/THWN 75 DEG. C. COPPER)

WIRE SIZE	CAPACITY	WIRE TYPE	NO. OF CONDUCTOR PERMITTED 1/2" C	3/4" C	1" C	1 1/4" C
#12	20A	THHN	9	16	25	45
#10	30A	THHN	5	10	16	28
#8	45A	THHN	2	5	8	14
#6	65A	THHN	1	3	5	10
#4	85A	THHN	1	2	4	7

JUNCTION BOX SIZE TABLE

BOX	SIZE	CU. IN.	MAX NO. OF CONDUCTORS #12	#10	#8	#6
4SS	1 1/4" x 4" SQ	18.0	8	7	6	0
4S	1 1/2" x 4" SQ	21.0	9	8	7	0
4SD	2 1/8" x 4" SQ	30.3	13	12	10	6
4SX	2 7/8" x 4" SQ	43.5	23	21	17	10
5SD	2 1/8" x 4-11/16" SQ	42.0	18	16	14	6
5SX	3 7/8" x 4-11/16" SQ	86.0	38	34	28	17
664	4" x 6" SQ	144.0	64	57	48	28

* DEDUCT ONE CONDUCTOR FOR (1) OR MORE GROUNDING CONDUCTORS ENTERING THE BOX

LEGEND

- 2x4 CEILING LIGHT WITH (3) T-8 LAMPS, LAY-IN FLUORESCENT LIGHT FIXTURE WITH DIMMABLE BALLAST ORACLE LIGHTING - MODEL 24.OT.332.2.T8A12.L41KC4 WATTAGE: 32W T8 (48"LG) OR EQUAL
- WALL MOUNTED HVAC UNIT. SEE MECHANICAL DWGS
- ROOF MOUNTED HVAC UNIT-SEE MECHANICAL DWGS
- ELECTRICAL PANEL AT +60" AFF TO TOP OF ELECTRICAL PANEL WITH 1 1/2" DIA POWER STUB OUT
- OS — CEILING MOUNTED OCCUPANCY SENSOR. WATTSTOPPER #LMPC-100 OR EQUAL.
- PC — CEILING MOUNTED PHOTOCELL, WATTSTOPPER #LMLS-500
- US — ULTRASONIC CEILING OCCUPANCY SENSOR. WATTSTOPPER W-500A OR EQUAL. SENSOR TO BE CONNECTED TO KEYED LIGHT SWITCHES FOR MANUAL OVERRIDE AND USE FOR RESTROOM W/ PARTITIONS.
- WS-1 — SINGLE SWITCH WALL OCCUPANCY SENSOR. WATTSTOPPER PW-100 OR EQUAL. SENSOR TO BE MOUNTED AT +44" AFF AND USE FOR OPEN ROOM (OR RESTROOM) LESS THAN 100 SQ FT W/ (1) CIRCUIT.
- RC — LIGHTING MANAGEMENT SYSTEM ROOM CONTROLLER, INSTALLED ABOVE CEILING, LOCATION AND # OF LOADS/ZONES TO BE VERIFIED, WATTSTOPER # LMRC-2XX
- $D — SINGLE BUTTON DIMMER SWITCH, AT +48" AFF. TO TOP OF OUTLET BOX, WATTSTOPPER #LMDM-101
- $ — LIGHT SWITCH. MOUNT AT +48" AFF TO TOP OF OUTLET BOX
- $3 — 3-WAY LIGHT SWITCH. MOUNT AT +48" AFF TO TOP OF OUTLET BOX
- DUPLEX (WALL MOUNTED) RECEPTACLE 15A - 125V - 3 WIRE. MOUNT AT +18" AFF U.O.N. TO CENTERLINE OF DEVICE
- WP — EXTERIOR WEATHER PROOF GFI RECEPTACLE AT +24 " AFF FOR A/C SERVICES (MAX 25'-0" FROM UNITS)
- GFI — GROUND FAULT CIRCUIT INTERRUPT RECEPTACLE WITHIN 6'-0" OF ALL SINKS
- ROOF — ROOF MOUNTED WEATHER PROOF GFI RECEPTACLE
- EM — EXTERIOR LED LIGHT FIXTURE W/ 90 MIN. EMERGENCY BATTERY BACKUP WHEN 'EM' IS DESIGNATED NEXT TO FIXTURE W/ PHOTOCELL W/ 30w MAX. MOUNT AT +93" AFF
- CLOCK OUTLET AT +90" AFF TO CENTERLINE OF DEVICE
- EXIT — EXIT SIGN WITH 90 MIN. BATTERY BACK UP. EXIT SIGN REQUIRED FOR CLASSROOMS WITH TWO OR MORE EXTERIOR DOORS, CLASSROOMS WITH ONE EXTERIOR DOOR - OPTIONAL)
- 4SD J-BOX FOR FIRE ALARM PULL STATION (DEVICE BY OTHERS). MOUNT AT +48" AFF TO TOP OF OUTLET BOX WITH 3/4" CONDUIT TO FIRE ALARM STROBE WITH PULL STRING
- 4SD J-BOX FOR FIRE ALARM STROBE OR VOICE EVAC SPEAKER (DEVICE BY OTHERS). BOTTOM OF LENS SHALL BE BETWEEN 80" AND 96" AFF AND WITH 3/4" CONDUIT TO EXTERIOR FIRE ALARM HORN WITH PULL STRING
- H — 4SD J-BOX FOR EXTERIOR FIRE ALARM HORN (DEVICE BY OTHERS). MOUNT AT +90" AFF TO TOP OF DEVICE WITH 3/4" CONDUIT STUBBED TO ATTIC WITH PULL STRING
- RECESSED 4SD J-BOX W / COVER PLATE FOR FUTURE FIRE ALARM SYSTEM BY OTHERS. MOUNT AT +18" AFF U.O.N. TO CENTERLINE OF BOX AND PROVIDE 1" CO STUB TO ATTIC SPACE WITH PULL STRING
- S — 4SD J-BOX IN ATTIC FOR CEILING MOUNTED SMOKE DETECTOR (DEVICE BY OTHERS). MAXIMUM 21'-0" FROM ANY POINT IN ROOM AND 30'-0" BETWEEN THEM. PROVIDE A 6'-0" CONDUIT FROM EACH J-BOX TO SMOKE DETECTOR LOCATION. CONDUIT & CONNECTION TO CEILING DEVICE & DEVICE BY OTHERS (ALARM NOTE #1)
- H — 4SD J-BOX IN ATTIC FOR ATTIC MOUNTED HEAT DETECTOR (DEVICE BY OTHERS). MAXIMUM 35'-0" FROM ANY POINT IN ATTIC AND 50'-0" BETWEEN THEM. PROVIDE A 6'-0" CONDUIT FROM EACH J-BOX TO HEAT DETECTOR LOCATION. CONDUIT & CONNECTION TO CEILING DEVICE & DEVICE BY OTHERS (ALARM NOTE #1)
- WH — 4SD J-BOX FOR WATER HEATER LOCATE ABOVE CEILING W/ COVER PLATE, HARD WIRE TO UNIT
- 100 CFM CEILING MOUNTED EXHAUST FAN. INTERLOCKED WITH LIGHT SWITCH
- 2x4 CEILING LIGHT WITH (3) T-8 LAMPS, LAY-IN FLUORESCENT LIGHT FIXTURE WITH DIMMABLE BALLAST ORACLE LIGHTING - MODEL 24.OT.332.2.T8A12.L41KC4 WATTAGE: 32W T8 (48"LG) OR EQUAL EACH LIGHT FIXTURE WHICH IS INDICATED AS BEING AN EMERGENCY LIGHT SHALL HAVE A BALLAST BATTERY PACK INSTALLED ON THE FIXTURE. THE BATTERY PACK SHALL PROVIDE POWER TO A SINGLE LAMP WITHIN THE FIXTURE FOR NO LESS THAN 90 MINUTES. ANY LIGHT FIXTURE EQUIPPED WITH A BATTERY PACK SHALL BE WIRED IN SUCH A MANNER THAT THE BATTERY WILL BE ACTIVATED IMMEDIATELY UPON LOSS OF POWER TO THE FIXTURE. ADDITIONALLY THE BATTERY PACK SHALL BE OPERATED USING BATTERY POWER LIGHTING CONTROL SWITCHES AND SENSORS SHALL NOT BE ABLE TO SHUT THE FIXTURE OFF.
- FS — DEDICATED CIRCUIT w/ LOCK ON DEVICE FOR FIRE SPRINKLER SWITCH AND BELL

NOT USED | 6

ELECTRICAL PLAN | SCALE: 1/4" = 1'-0" | 4

ELECTRICAL PANEL

VOLTS: 120/208 V | PANEL: "A" WALL MOUNTED HVAC | FEED: REAR
MAIN: 100 A | LOCATION: INTERIOR ACCESS | MOUNTING: FLUSH

LOAD	QTY	WATTS AØ	WATTS BØ	BREAKER Amps	P	Circuit	A	B	Circuit	BREAKER Amps	P	WATTS AØ	WATTS BØ	QTY	LOAD
RECEPTACLES	4	720		20	1	1			2	60	2	6670		1	4 TON HVAC - WALL MOUNT (4 KW)
RECEPTACLES/CLOCK	5		900	20	1	3			4		-		6670		-
INTERIOR LIGHTING	8	960		20	1	5			6						
EXTERIOR LIGHTING	1		40	20	1	7			8						
WALL RECEPTACLE (GFI)	1	180		20	1	9			10						DED. - SOLAR READY
						11			12						DED. - SOLAR READY
						13			14	20	1		40		FIRE ALARM (NOTE #2)
A = 8530 WATTS / PHASE		1860	940									6670	6710		B = 7650 WATTS / PHASE
TOTAL = 16,180 WATTS		78		AMPS		120/208			VOLTS			1 Ø			3 WIRE

ELECTRICAL PANEL

VOLTS: 120/208 V | PANEL: "A" ROOF MOUNTED HVAC | FEED: REAR
MAIN: 100 A | LOCATION: INTERIOR ACCESS | MOUNTING: FLUSH

LOAD	QTY	WATTS AØ	WATTS BØ	BREAKER Amps	P	Circuit	A	B	Circuit	BREAKER Amps	P	WATTS AØ	WATTS BØ	QTY	LOAD
RECEPTACLES	4	720		20	1	1			2	70	2	7360		1	4 TON HVAC - ROOF MOUNT (5 KW)
RECEPTACLES/CLOCK	5		900	20	1	3			4		-		7360		-
INTERIOR LIGHTING	8	960		20	1	5			6						
EXTERIOR LIGHTING	1		40	20	1	7			8						
ROOF RECEPTACLE (GFI)	1	180		20	1	9			10						DED. - SOLAR READY
						11			12						DED. - SOLAR READY
						13			14	20	1		40		FIRE ALARM (NOTE #2)
A = 9220 WATTS / PHASE		1860	940									7360	7400		B = 8340 WATTS / PHASE
TOTAL = 17560 WATTS		84		AMPS		120/208			VOLTS			1 Ø			3 WIRE

NOTE: PROVIDE A MINIMUM OF 72 SF SOLAR READY AREA PER MODULE. AREA TO BE A MINIMUM OF 5' IN ANY DIRECTION WITH A MINIMUM SPACE OF 80 SF PER BUILDING.

THESE DRAWINGS AND ALL MATERIAL CONTAINED HEREIN ARE THE PROPERTY OF SILVERCREEK INDUSTRIES, INC (SCI Inc) AND SHALL NOT BE REPRODUCED, COPIED OR OTHERWISE DISPOSED OF DIRECTLY OR INDIRECTLY AND SHALL NOT BE USED IN WHOLE OR IN PART TO ASSIST IN THE MAKING OF OR FOR THE PURPOSE OF FURNISHING ANY INFORMATION FOR THE MAKING OF DRAWINGS, PRINTS, APPARATUS OR PARTS THEREOF WITHOUT THE FULL KNOWLEDGE AND WRITTEN CONSENT OF SCI Inc.
ALL PATENTABLE MATERIAL CONTAINED HEREIN AND ORIGINATING WITH SCI Inc SHALL BE THE PROPERTY OF SCI Inc

SILVER CREEK INDUSTRIES, INC.
"BUILDING FOR THE NEXT GENERATION"
SILVER CREEK
2830 BARRETT AVE PERRIS, CALIFORNIA 92571
PHONE: 951-943-5393 FAX: 951-943-2211

PROJECT NAME:

24x40 STOCKPILE OFFICE BUILDING

SHEET TITLE:

ELECTRICAL PLAN AND SCHEDULE 24' x 40'

LICENSED ARCHITECT — DAVID E. SHIVELY III — C-33467 — REN 01-31-2017 — STATE OF CALIFORNIA

ARCHITECT OF RECORD SUBMISSION DATE

FILE #: 15-6
IDENTIFICATION STAMP DIV. OF THE STATE ARCHITECT OFFICE OF REGULATION SERVICES
03-118270
AC FLS SS
DATE NOV - 8 2017
TRACKING #: 63221-290

PROJECT SPECIFIC STATE AGENCY APPROVAL

IDENTIFICATION STAMP DIV. OF THE STATE ARCHITECT
04 116284
ACS FLS SS RAF
DATE MAY - 8 2017

ORIGINAL PC STATE AGENCY APPROVAL

PRE-CHECK (PC) DOCUMENT CODE 8/11 CSC
A SEPARATE REQUEST APPLICATION FOR CONSTRUCTION IS REQUIRED

IDENTIFICATION STAMP DIV. OF THE STATE ARCHITECT OFFICE OF REGULATION SERVICES
PC 04-114102
AC FLS SS RAF
DATE AUG - 7 2015

REVISIONS

1
2
3
4
5
6
7
8

SILVER CREEK INDUSTRIES
24' x 40' PC - 2:12 PITCH

PROJECT NO:
DRAWN BY:
SCALE: AS NOTED
DATE: 01-30-15

P.C. SHEET NUMBER

E-1.01

REFER TO SHEET "E-1.01N" FOR PROJECT SPECIFIC

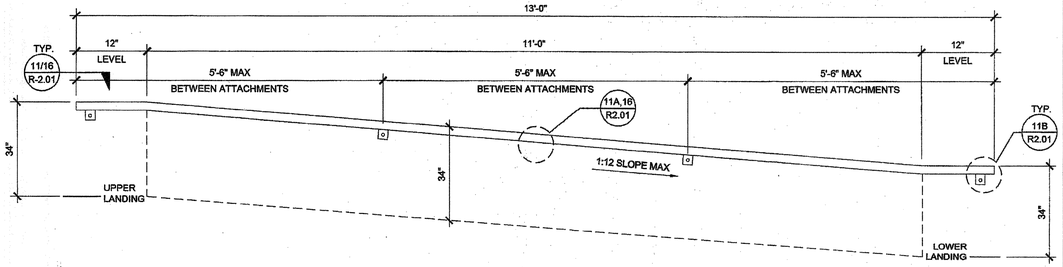

HANDRAIL ATTACHMENT TO BUILDING

SCALE : 1" = 1'-0" | 6

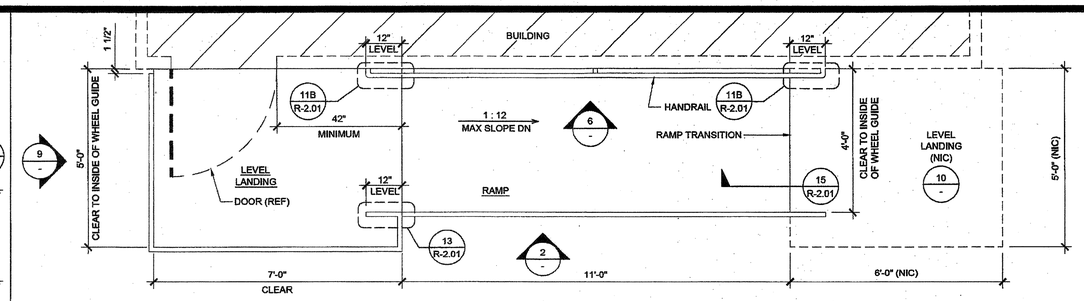

RAMP AND LANDING AT BUILDING

SCALE : 1/2" = 1'-0" | 1

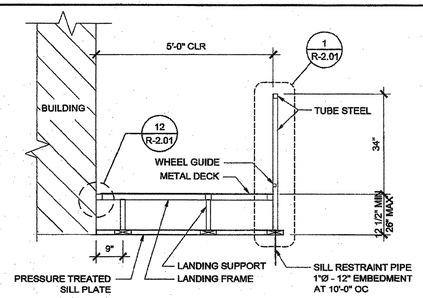

SECTION AT LANDING

SCALE : 1/2" = 1'-0" | 7

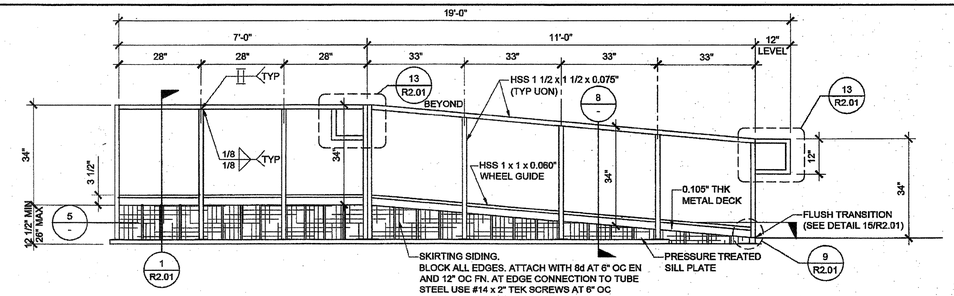

RAMP AND LANDING ELEVATION

SCALE : 1/2" = 1'-0" | 2

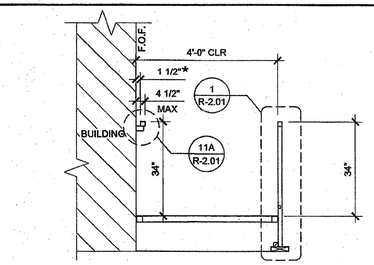

NOTE (*)

1. ALL HANDRAIL SURFACES SHALL BE SMOOTH WITH NO SHARP CORNERS, PER CBC 11B-505.8 WALL TO BE SMOOTH AND TO EXTEND 8" ABOVE HANDRAIL

SECTION AT RAMP

SCALE : 1/2" = 1'-0" | 8

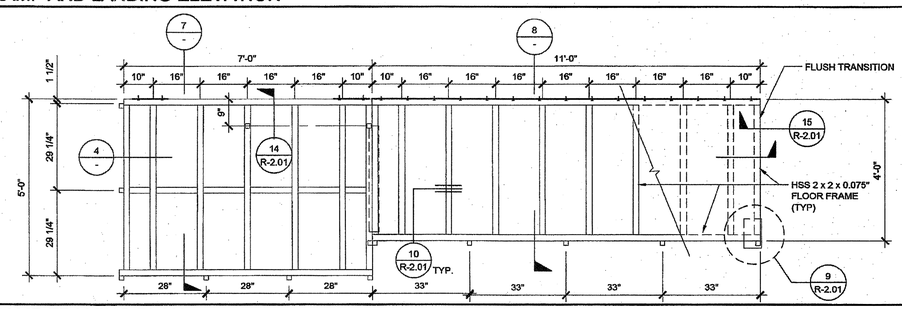

RAMP FRAMING PLAN

SCALE : 1/2" = 1'-0" | 3

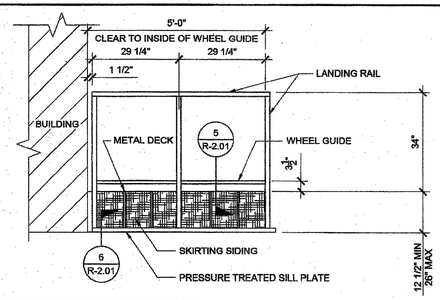

LANDING ELEVATION

SCALE : 1/2" = 1'-0" | 9

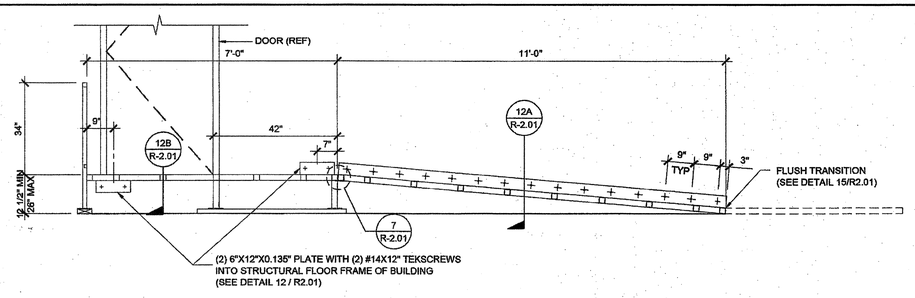

SECTION AT RAMP AND LANDING

SCALE : 1/2" = 1'-0" | 4

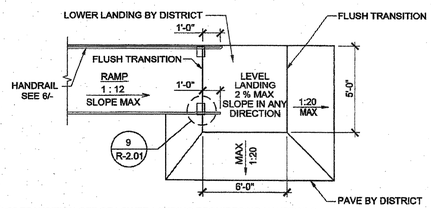

NOTE:

1. 1:20 TRANSITION OFF OF LOWER LANDING REQUIRES NO HANDRAILS.
2. TRANSITIONS EXCEEDING 1:20 BUT NOT TO EXCEED 1:12 REQUIRE REMOVAL OF 12" HANDRAIL EXTENSION AND ADDITIONAL HANDRAILING BY DISTRICT.
(THIS CONDITION REQUIRES A SITE SPECIFIC DETAIL PROVIDED BY ARCHITECT TO DEMONSTRATE ACCESSIBLE RAMP.)

RAMP TRANSITION

SCALE: NTS | 10

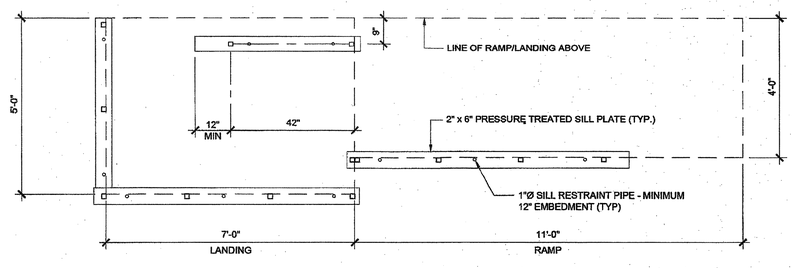

SILL PLAN FOR RAMP AND LANDING

SCALE : 1/2" = 1'-0" | 5

THESE DRAWINGS AND ALL MATERIAL CONTAINED HEREIN ARE THE PROPERTY OF SILVERCREEK INDUSTRIES, INC (SCI Inc) AND SHALL NOT BE REPRODUCED, COPIED OR OTHERWISE DISPOSED OF DIRECTLY OR INDIRECTLY AND SHALL NOT BE USED IN WHOLE OR IN PART TO ASSIST IN THE MAKING OF OR FOR THE PURPOSE OF FURNISHING ANY INFORMATION FOR THE MAKING OF DRAWINGS, PRINTS, APPARATUS OR PARTS THEREOF WITHOUT THE FULL KNOWLEDGE AND WRITTEN CONSENT OF SCI Inc.
ALL PATENTABLE MATERIAL CONTAINED HEREIN AND ORIGINATING WITH SCI Inc SHALL BE THE PROPERTY OF SCI Inc

SILVER CREEK INDUSTRIES, INC.
"BUILDING FOR THE NEXT GENERATION"
SILVER CREEK
2830 BARRETT AVE PERRIS, CALIFORNIA 92571
PHONE: 951-943-5393 FAX: 951-943-2211

PROJECT NAME:

24x40 STOCKPILE OFFICE BUILDING

SHEET TITLE:

RAMP LANDING

LICENSED ARCHITECT
J. F. SHIVELY III
C-33487
REN 01-31-2017
STATE OF CALIFORNIA

ARCHITECT OF RECORD SUBMISSION DATE

FILE #: 15-8
IDENTIFICATION STAMP
DIV. OF THE STATE ARCHITECT
OFFICE OF REGULATION SERVICES
03-118270
AC. FLS. SS CL
DATE NOV - 9 2017
TRACKING #: 63221-290

PROJECT SPECIFIC STATE AGENCY APPROVAL

IDENTIFICATION STAMP
DIV. OF THE STATE ARCHITECT
04 116284
AC. FLS. SS RAF
DATE MAY 18 2017

ORIGINAL PC STATE AGENCY APPROVAL

PRE-CHECK (PC) DOCUMENT
CCCS: §913 CBC
A SEPARATE PROJECT APPLICATION FOR CONSTRUCTION IS REQUIRED

IDENTIFICATION STAMP
DIV. OF THE STATE ARCHITECT
OFFICE OF REGULATION SERVICES
PC 04-114102
AC. FLS. SS RAF
DATE AUG - 4 2015

REVISIONS

1
2
3
4
5
6
7
8

SILVER CREEK INDUSTRIES
24' x 40' PC - 2:12 PITCH

PROJECT NO:
DRAWN BY:
SCALE: AS NOTED
DATE: 01-30-15

P.C. SHEET NUMBER

R-1.01

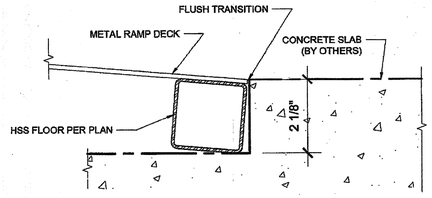

FLUSH TRANSITION AT BOTTOM OF RAMP
SCALE : 6" = 1'-0" | 15

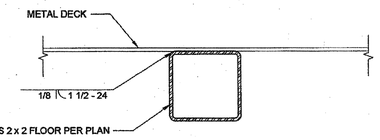

DECK TO FRAME
SCALE : 6" = 1'-0" | 10

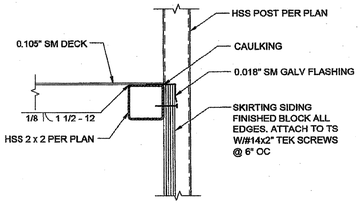

SKIRT FLASHING
SCALE : 3" = 1'-0" | 5

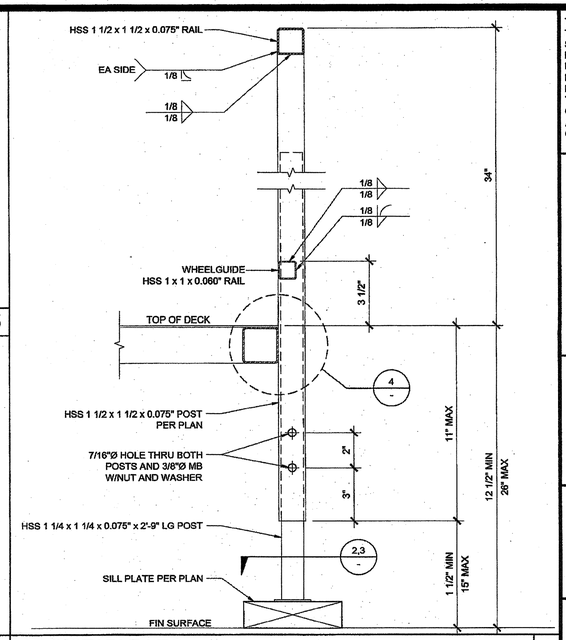

ADJUSTABLE LEG
SCALE : 3" = 1'-0" | 1

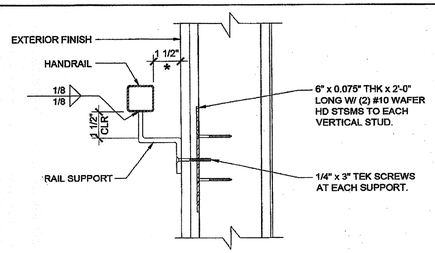

NOTE (*)
1. ALL SURFACES SHALL BE SMOOTH WITH NO SHARP CORNERS, PER CBC 11B-405.8 WALL TO BE SMOOTH AND TO EXTEND 8" ABOVE HANDRAIL

HANDRAIL CONNECTION AT SHEETMETAL BLKG
SCALE : 3" = 1'-0" | 16

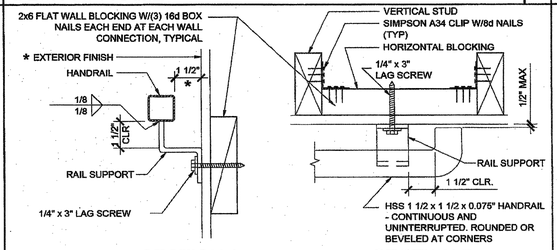

NOTE (*)
1. ALL SURFACES SHALL BE SMOOTH WITH NO SHARP CORNERS, PER CBC 11B-405.8 WALL TO BE SMOOTH AND TO EXTEND 8" ABOVE HANDRAIL

HANDRAIL CONNECTION AT WOOD BLOCKING
SCALE : 3" = 1'-0" | 11

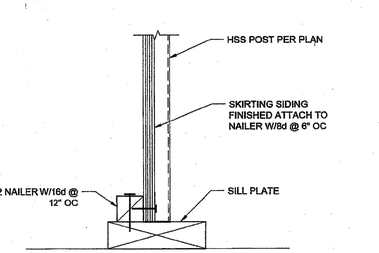

SKIRT FLASHING AT SILL PLATE
SCALE : 3" = 1'-0" | 6

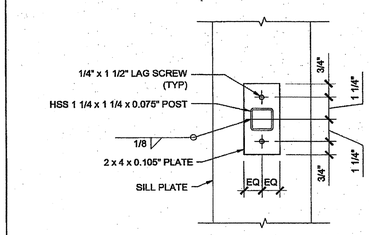

ADJUSTABLE LEG
SCALE : 3" = 1'-0" | 1

17

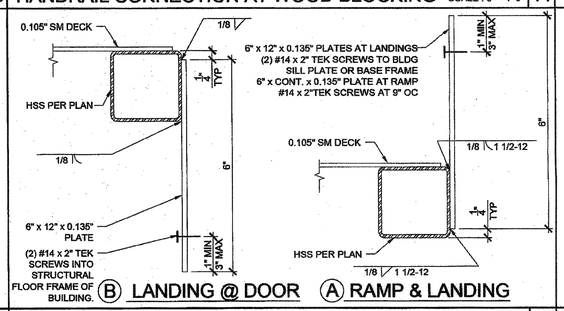

SECTION AT PLATE
SCALE : 6" = 1'-0" | 12

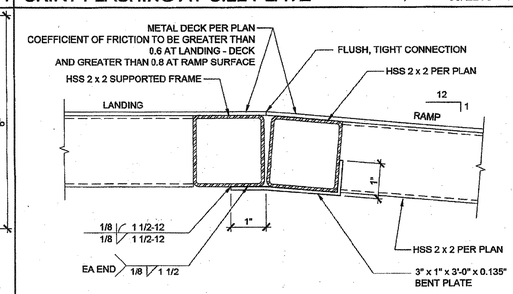

RAMP AT LANDING
SCALE : 6" = 1'-0" | 7

ADJUSTABLE LEG BASE PLATE
SCALE : 3" = 1'-0" | 2

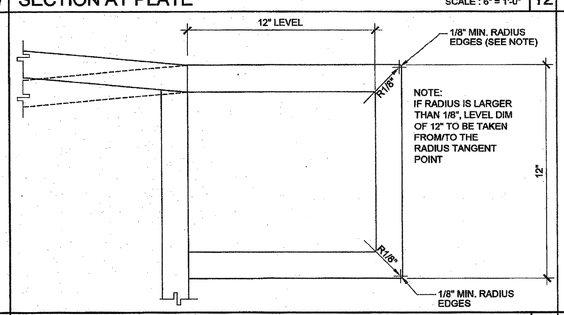

EXTEND HANDRAIL @ TOP OR BOTT. ENDS
SCALE : 3" = 1'-0" | 13

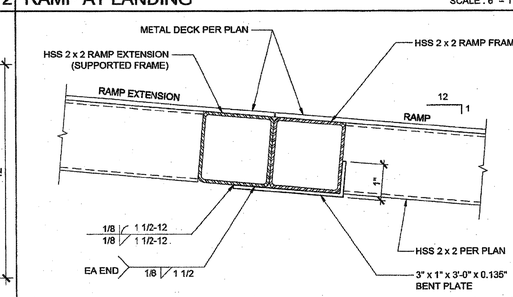

RAMP EXTENSION
SCALE : 6" = 1'-0" | 8

ADJUSTABLE LEG BASE PLATE
SCALE : 3" = 1'-0" | 3

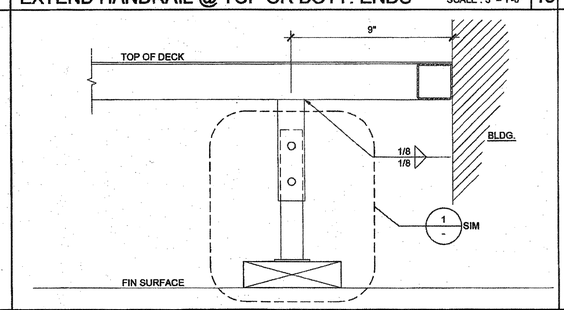

INTERIOR LANDING LEG SECTION
SCALE : 3" = 1'-0" | 14

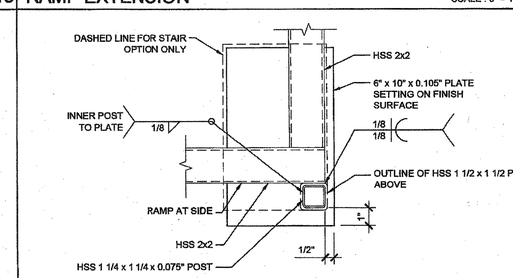

BASE PLATE AT RAMP TOE
SCALE : 3" = 1'-0" | 9

GUARDRAIL POST ATTACHMENT
SCALE : 6" = 1'-0" | 4

THESE DRAWINGS AND ALL MATERIAL CONTAINED HEREIN ARE THE PROPERTY OF SILVERCREEK INDUSTRIES, INC (SCI Inc) AND SHALL NOT BE REPRODUCED, COPIED OR OTHERWISE DISPOSED OF DIRECTLY OR INDIRECTLY AND SHALL NOT BE USED IN WHOLE OR IN PART TO ASSIST IN THE MAKING OF OR FOR THE PURPOSE OF FURNISHING ANY INFORMATION FOR THE MAKING OF DRAWINGS, PRINTS, APPARATUS OR PARTS THEREOF WITHOUT THE FULL KNOWLEDGE AND WRITTEN CONSENT OF SCI Inc.
ALL PATENTABLE MATERIAL CONTAINED HEREIN AND ORIGINATING WITH SCI Inc SHALL BE THE PROPERTY OF SCI Inc

SILVER CREEK INDUSTRIES, INC.
"BUILDING FOR THE NEXT GENERATION"
SILVER CREEK
2830 BARRETT AVE PERRIS, CALIFORNIA 92571
PHONE: 951-943-5393 FAX: 951-943-2211

PROJECT NAME:

24x40 STOCKPILE OFFICE BUILDING

SHEET TITLE:

RAMP DETAILS

LICENSED ARCHITECT
C-33467
REN 01-31-2017
STATE OF CALIFORNIA

ARCHITECT OF RECORD SUBMISSION DATE

FILE #: 15-6
IDENTIFICATION STAMP
DIV. OF THE STATE ARCHITECT
OFFICE OF REGULATION SERVICES
03-118270
AC FLS SS CL
DATE NOV - 9 2016
TRACKING #: 63221-290

PROJECT SPECIFIC STATE AGENCY APPROVAL

IDENTIFICATION STAMP
DIV. OF THE STATE ARCHITECT
04 116284
ACS FLS SS RAF
DATE MAY 18 2017

ORIGINAL PC STATE AGENCY APPROVAL

PRE-CHECK (PC) DOCUMENT
DOES NOT CONSTITUTE A BEGIN WORK REQUEST APPLICATION FOR CONSTRUCTION IS REQUIRED

IDENTIFICATION STAMP
DIV. OF THE STATE ARCHITECT
OFFICE OF REGULATION SERVICES
PC 04-114102
AC FLS SS RAF
DATE AUG - 4 2015

REVISIONS
1
2
3
4
5
6
7
8

SILVER CREEK INDUSTRIES
24' x 40' PC - 2:12 PITCH

PROJECT NO:	
DRAWN BY:	
SCALE:	AS NOTED
DATE:	01-30-15

P.C. SHEET NUMBER

R-2.01

58