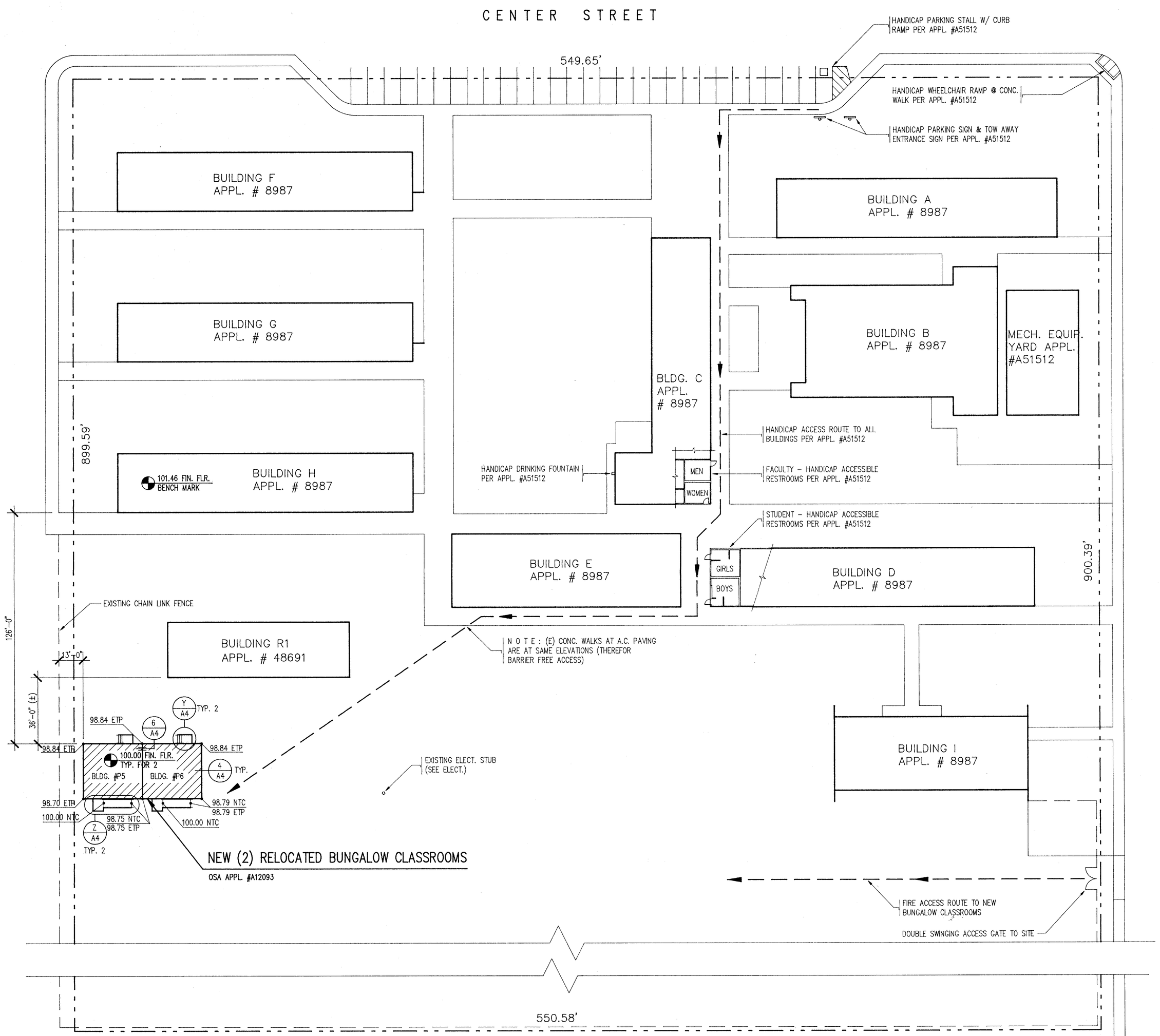

LEGEND

FF FINISH FLOOR
ETP EXISTING TOP OF PAVING
NTC NEW TOP OF CONCRETE

SIERRA JR. HIGH SCHOOL 3017 CENTER STREET

SITE PLAN

SCALE : 1" = 30'-0"

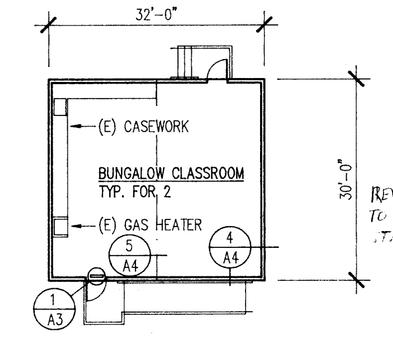

(SIERRA JR. HIGH SCHOOL ONLY)

TYPICAL FLOOR PLAN

SCALE : 1/16" = 1'-0"

SHEET INDEX

SHT.	TITLE
A1	SIERRA JR. HIGH SCHOOL SITE PLAN ~ SHEET INDEX ~ VICINITY MAP
A2	BESSIE OWENS ELEMENTARY SCHOOL SITE PLAN
A3	FREMONT ELEMENTARY SCHOOL SITE PLAN ~ PARTIAL SITE PLAN
A4	SECTIONS ~ DETAILS
A5	MT. VERNON SCHOOL & HORACE MANN SCHOOL SITE PLANS
P1	PARTIAL SITE / PLUMBING PLANS
E1	FREMONT ELEM. SCHOOL SITE PLAN ~ NOTES ~ DETAIL ~ SCHEDULE
E2	BESSIE OWENS ELEM. SCHOOL SITE PLAN ~ SINGLE LINE DIAGRAM ~ SCHEDULE
E3	SIERRA JR. HIGH SCHOOL SITE PLAN ~ SPECIFICATIONS ~ SINGLE LINE DIAGRAM

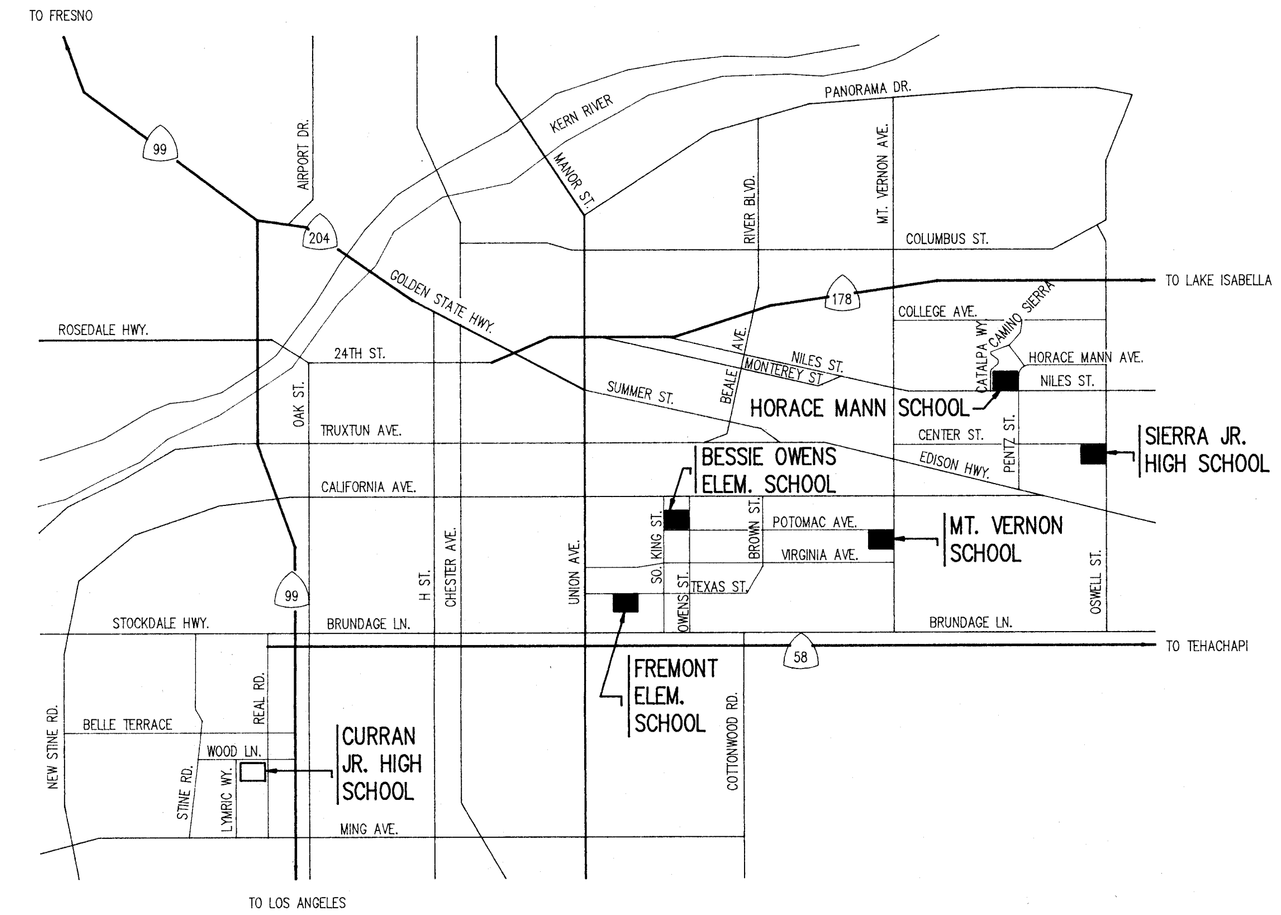

VICINITY MAP

SCALE : N.T.S.

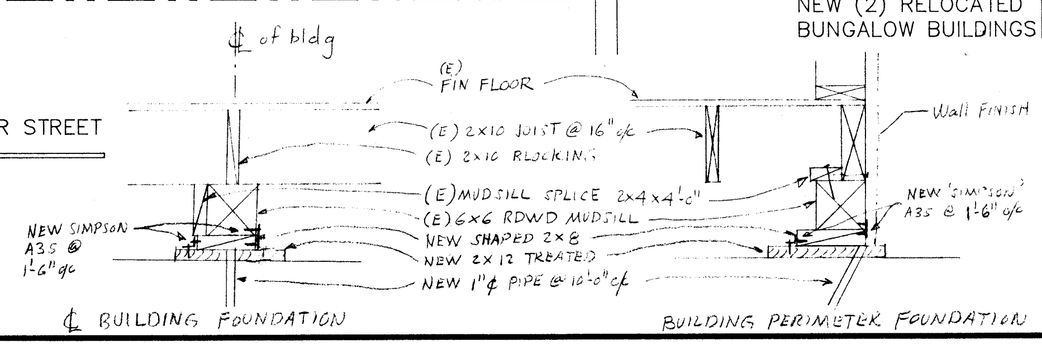

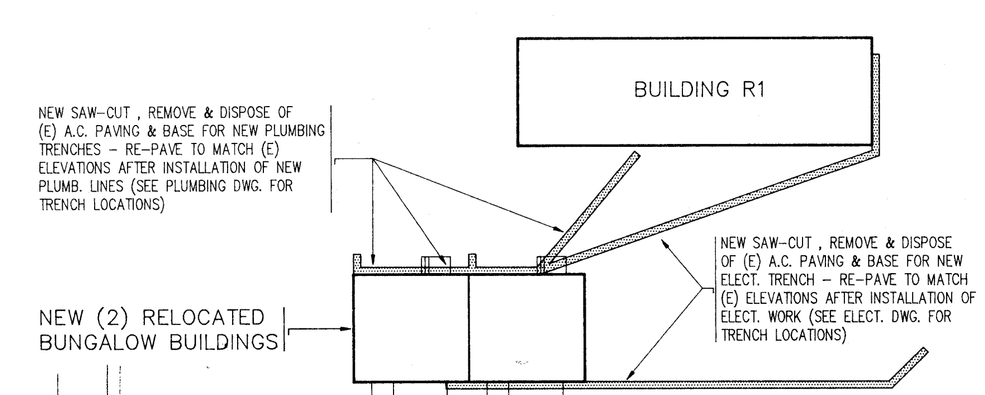

TRENCH PATCHING PLAN

SCALE : 1" = 30'-0"

FIRE MARSHAL

A.C.S.

O.S.A.

Glenn Hartzell A.I.A.
26 'H' STREET , 93304 (805) 324-6416
P.O. BOX 2344 , 93303 , BAKERSFIELD , CALIFORNIA
ARCHITECT C-10298 DATE 6-11-90

BAKERSFIELD CITY SCHOOL DISTRICT
BY RESOLUTION OF THE BOARD OF TRUSTEES APPROVED : _____ DATE

SIERRA JR. HIGH SCHOOL SITE PLAN ~ SHEET INDEX ~ VICINITY MAP

(RELOCATE BUNGALOW CLASSROOMS)
BAKERSFIELD CITY SCHOOL DISTRICT
1300 BAKER STREET
BAKERSFIELD , KERN COUNTY , CALIFORNIA

DATE 6-11-90 DRAWN BF & JA

JOB NO. 122

SHEET NO. A1

SHEET 1 OF 5

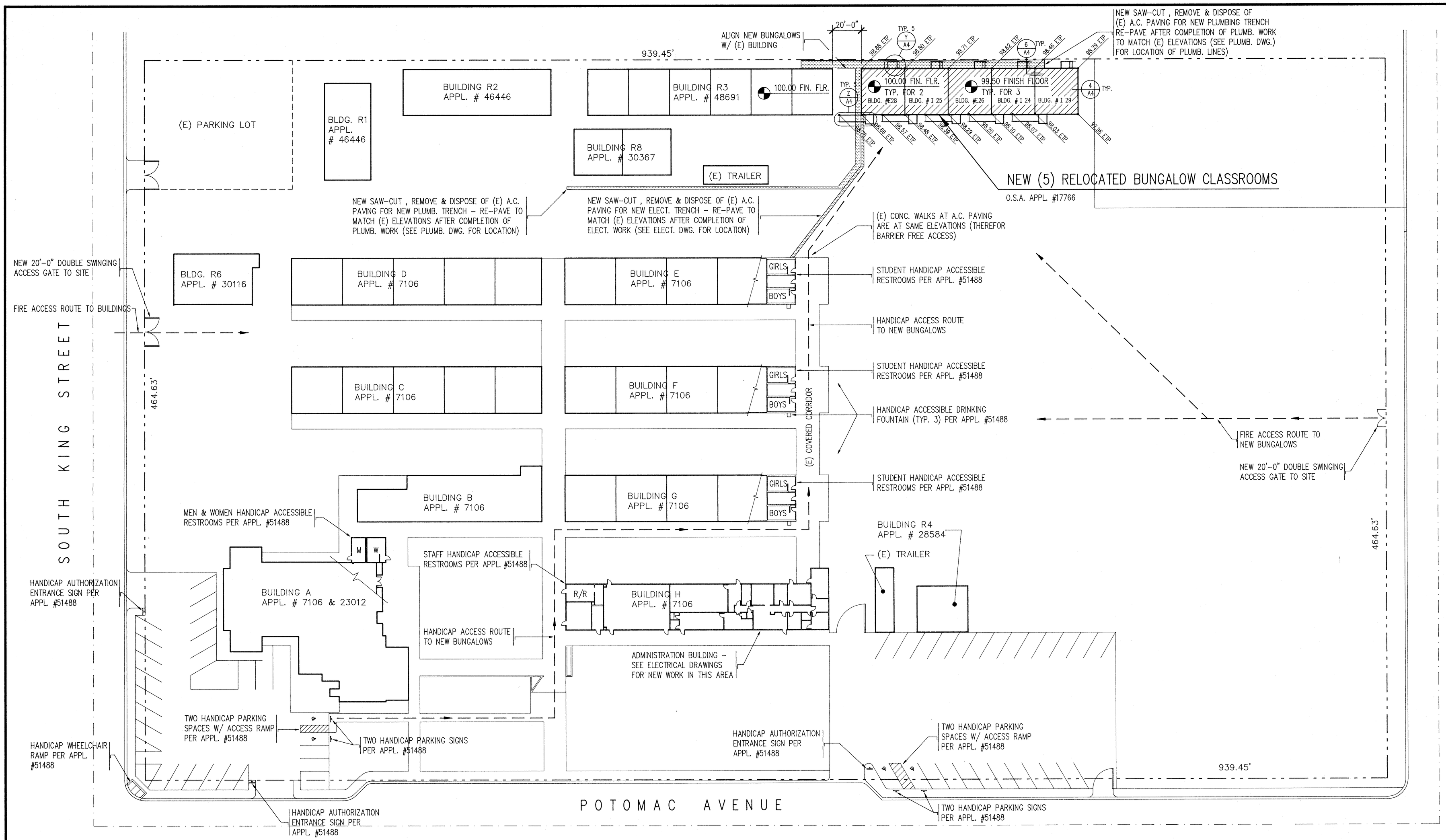

BESSIE OWENS ELEMENTARY SCHOOL

315 POTOMAC AVENUE

SITE PLAN

SCALE : 1" = 30'-0"

FIRE MARSHAL

A.C.S.

IDENTIFICATION STAMP
Department of General Services
OFFICE OF STATE ARCHITECT
JUN 29 1990
A544301 J.W.

O.S.A.

Glenn Hartzell A.I.A.
26 "H" STREET , 93304 (805) 324-6416
P.O. BOX 2344 , 93303 , BAKERSFIELD , CALIFORNIA
ARCHITECT C-10298 DATE 6-11-90

BAKERSFIELD CITY SCHOOL DISTRICT
BY RESOLUTION OF THE BOARD OF TRUSTEES APPROVED :
DATE

DATE	DRAWN
6-11-90	EF & JA

BESSIE OWENS ELEMENTARY SCHOOL SITE PLAN
(RELOCATE BUNGALOW CLASSROOMS)
BAKERSFIELD CITY SCHOOL DISTRICT
1300 BAKER STREET
BAKERSFIELD , KERN COUNTY , CALIFORNIA

JOB NO. 122

SHEET NO. A 2

SHEET 2 OF 5

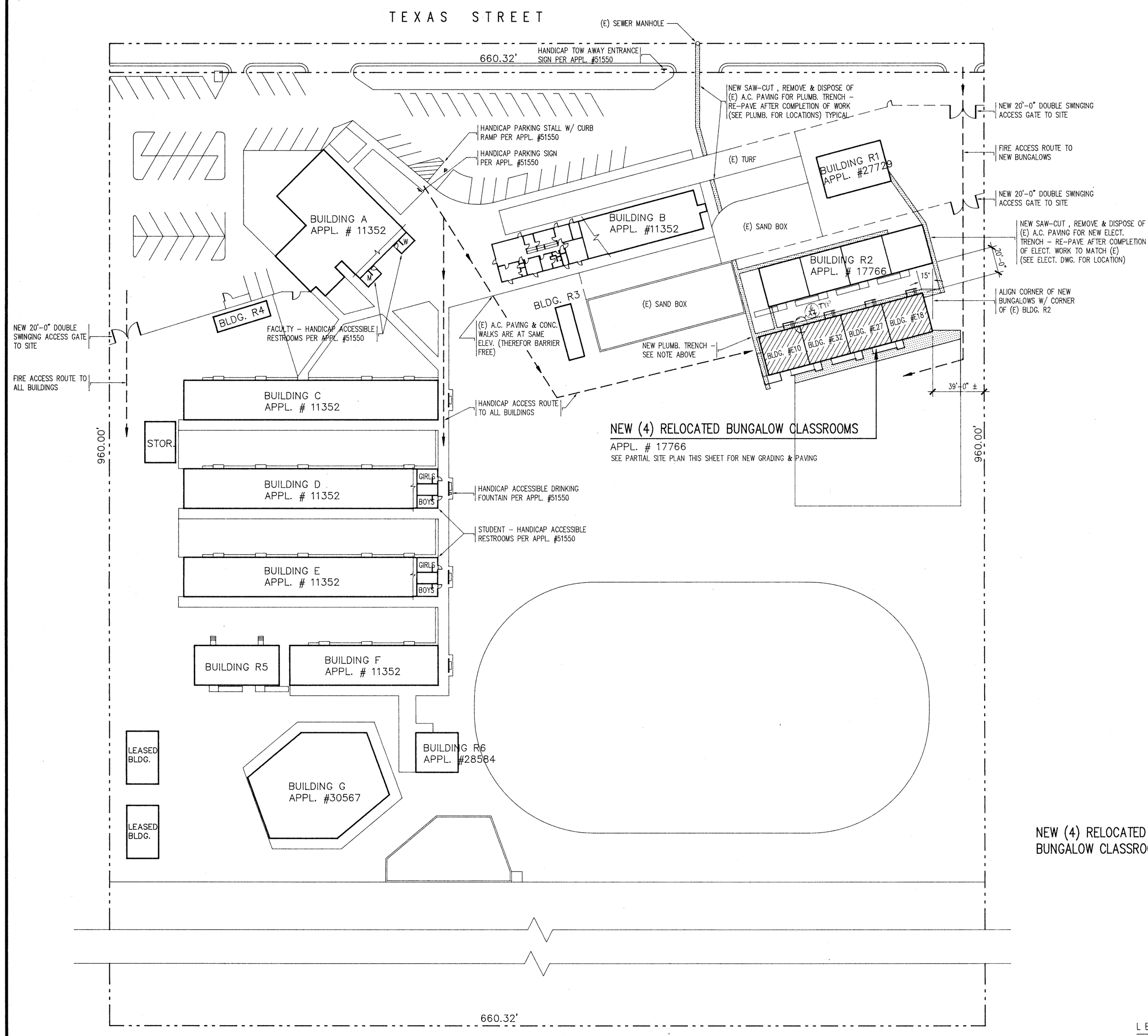

FREMONT ELEMENTARY SCHOOL 607 TEXAS STREET

SITE PLAN

SCALE : 1" = 40'-0"

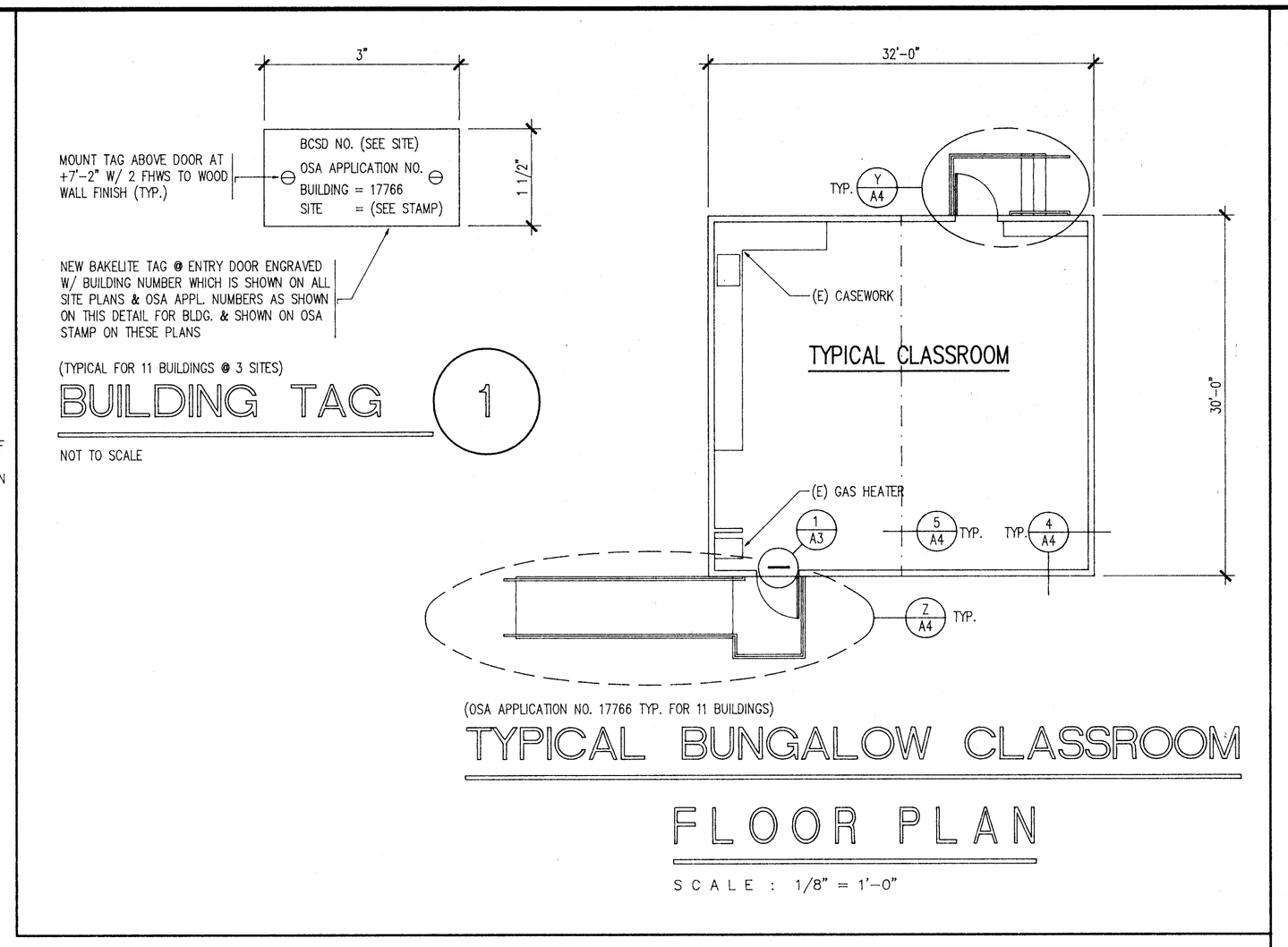

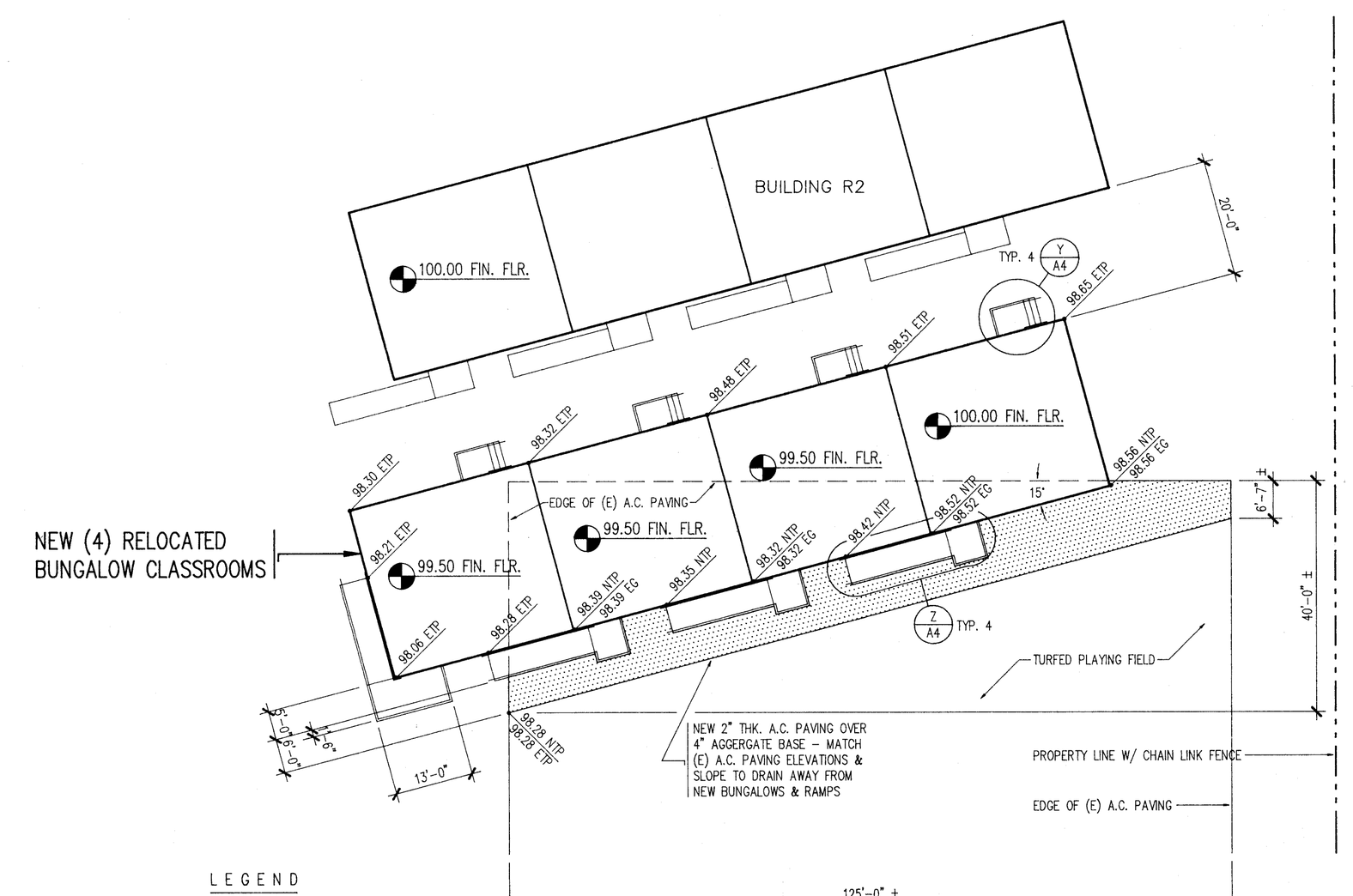

LEGEND

EG	EXISTING GRADE
ETP	EXISTING TOP OF PAVING
FIN. FLR.	FINISH FLOOR
NTP	NEW TOP OF PAVING

NOTE :
(E) SPRINKLER HEADS & IRRIGATION LINES TO BE REMOVED & REMODELED BY OWNER (SCHOOL DISTRICT)

PARTIAL SITE PLAN

SCALE : 1/16" = 1'-0"

FIRE MARSHAL

A.C.S.

O.S.A.

Glenn Hartzell A.I.A.
26 'H' STREET, 93304
P.O. BOX 2344, 93303, BAKERSFIELD, CALIFORNIA (805) 324-6416
ARCHITECT C-10298 DATE 6-11-90

BAKERSFIELD CITY SCHOOL DISTRICT
BY RESOLUTION OF THE BOARD OF TRUSTEES APPROVED _____ DATE _____

DATE 6-11-90
DRAWN BF & JA

FREMONT ELEMENTARY SCHOOL SITE PLAN – PARTIAL SITE PLAN

(RELOCATE BUNGALOW CLASSROOMS)
BAKERSFIELD CITY SCHOOL DISTRICT
1300 BAKER STREET
BAKERSFIELD, KERN COUNTY, CALIFORNIA

JOB NO. 122

SHEET NO. A3

SHEET 3 OF 5

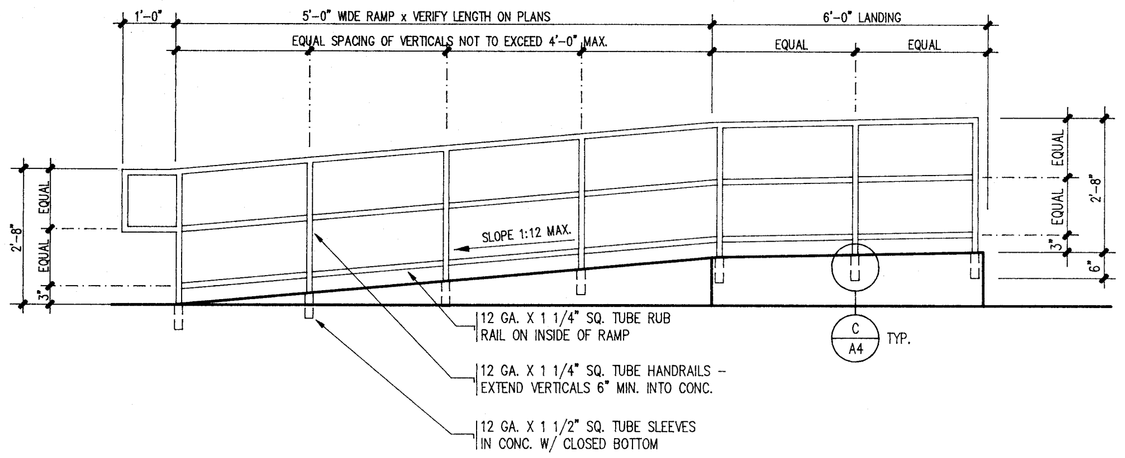

HANDRAIL ELEVATION (A)

SCALE : 1/2" = 1'-0"

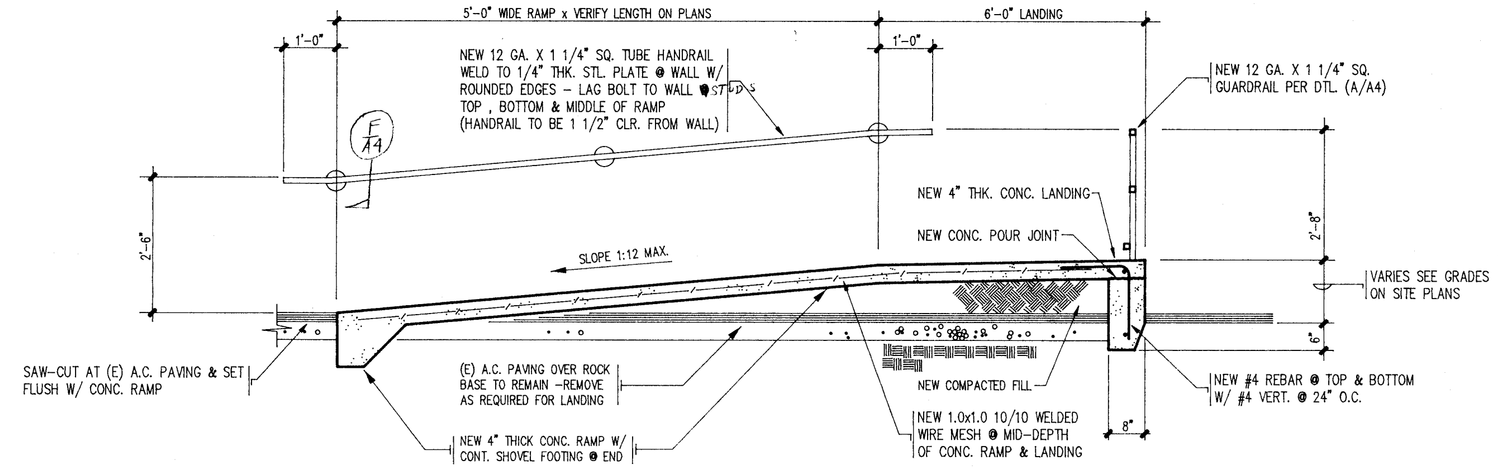

RAMP & LANDING SECTION (B)

SCALE : 1/2" = 1'-0"

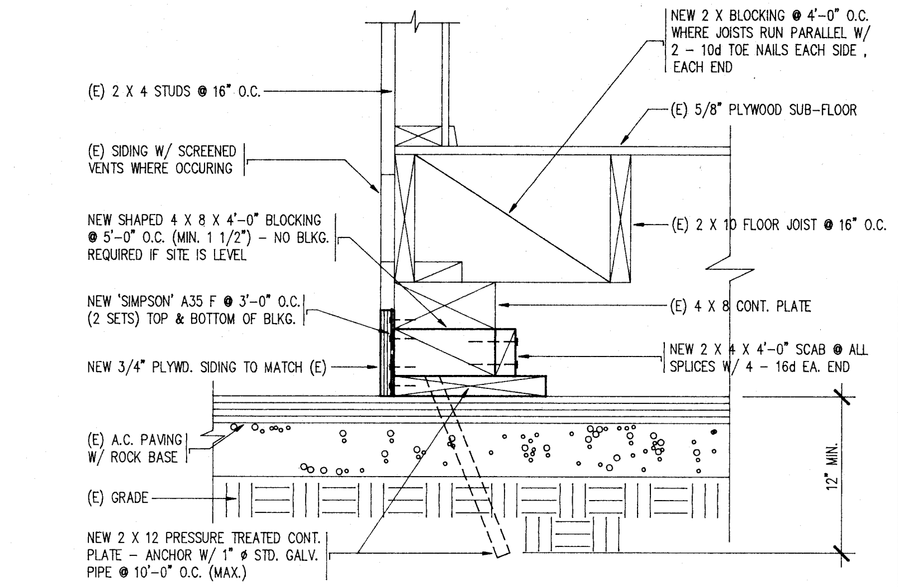

4 BUILDING FOUNDATION (TYP @ PERIMETER)

SCALE : 1 1/2" = 1'-0"

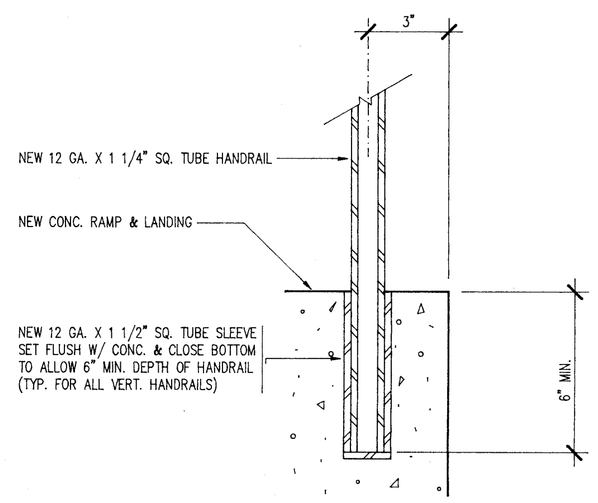

HANDRAIL SLEEVE DETAIL (C)

SCALE : 3" = 1'-0"

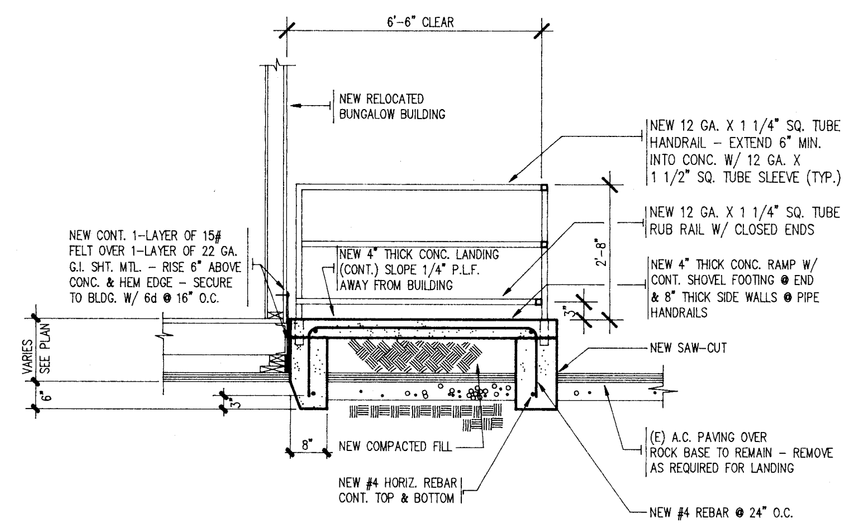

RAMP & LANDING SECTION (D)

SCALE : 1/2" = 1'-0"

NOTE:
RAMPS, LANDINGS, HANDRAILS: RAMPS SHALL NOT SLOPE MORE THAN 1" IN 12". HANDRAILS AT BOTH SIDES OF RAMP 32" HIGH. RAMP & LANDING TO HAVE NON–SLIP SURFACE.

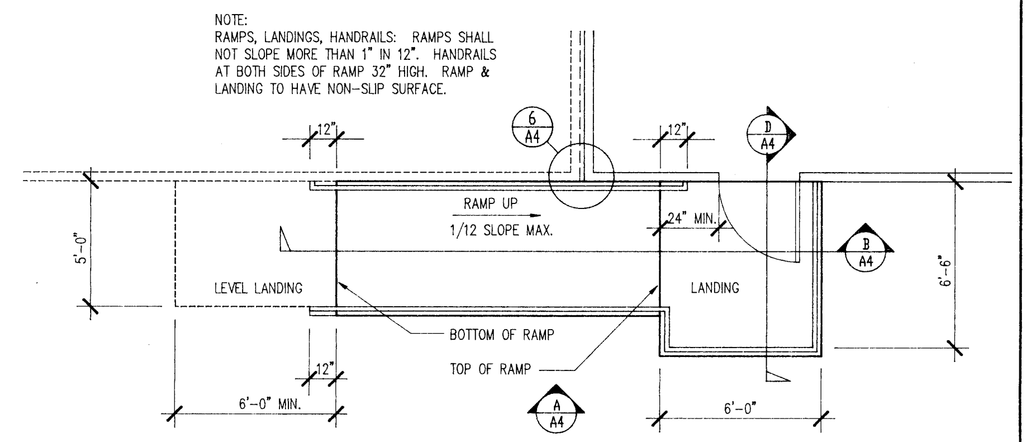

STANDARD RAMP PLAN (Z)

SCALE : 1/4" = 1'-0"

GENERAL NOTES for DETAILS (4) & (5)

1. SILL PLATES SHALL BE TREATED DOUGLAS FIR UNLESS OTHERWISE NOTED.
2. PIPES SHALL BE ASTM A53 GRADE B , 1" ø STD. GALVANIZED PIPES.
3. ALL NAILS TO BE GALVANIZED , COMMON WIRE NAILS. WHERE POSSIBLE NAILS DRIVEN PERPENDICULAR TO THE GRAIN SHALL BE USED INSTEAD OF TOE NAILS.
4. ALL FRAMING LUMBER SHALL BE GRADE MARKED DOUGLAS FIR , NO. 1

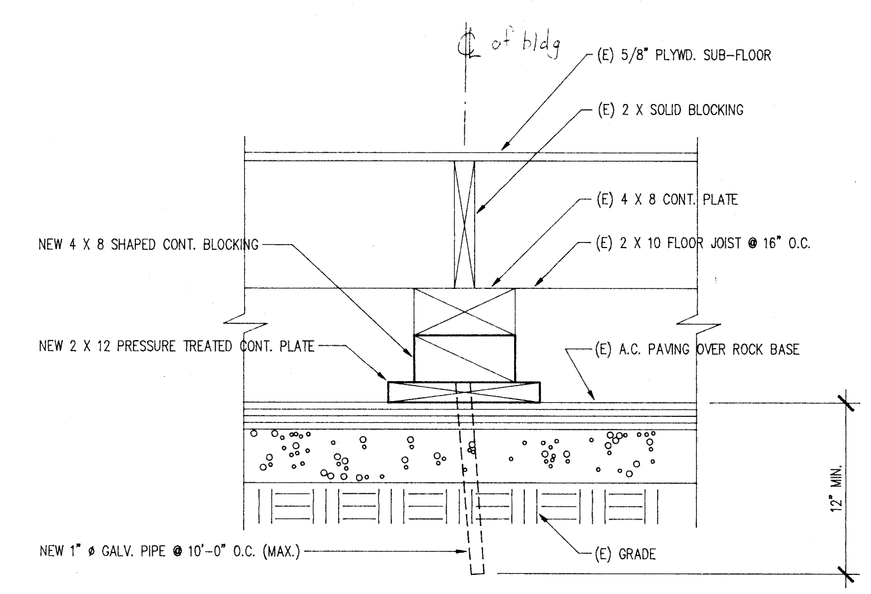

5 INTERM. BLDG. FOUNDATION

SCALE : 1 1/2" = 1'-0"

NOTES :

1) ALL ITEMS SHOWN BUT NOT NOTED SHALL BE THE SAME AS SECTION " D " THIS SHEET

2) ALL WELDS TO BE GROUND SMOOTH & ALL TUBE HANDRAILS & MEMBERS TO BE PRIMED & PAINTED

3) SUBMIT THREE (3) SETS OF SHOP DRAWINGS TO ARCHITECT PRIOR TO MANUFACTURING

CONCRETE SHALL BE 3000 PSI @ 28 DAYS & SHALL COMPLY TO TABLE 26A? TITLE 24 CCR
TEST 2 CONCRETE CYLINDERS

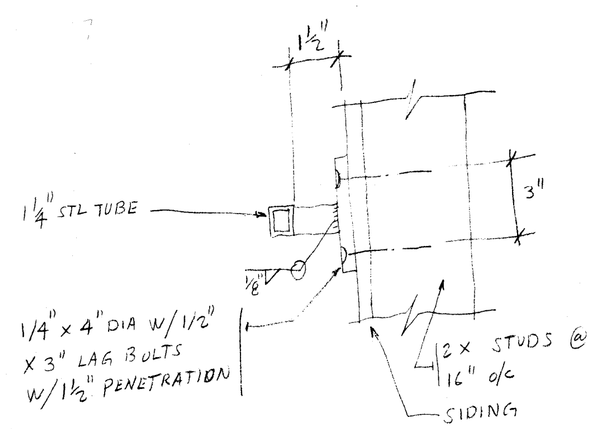

(F)

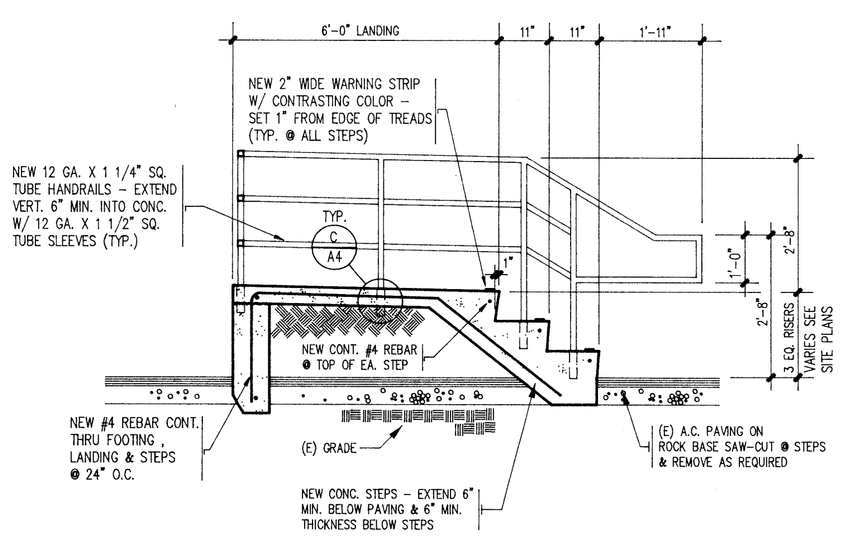

STEPS & LANDING SECTION (E)

SCALE : 1/2" = 1'-0"

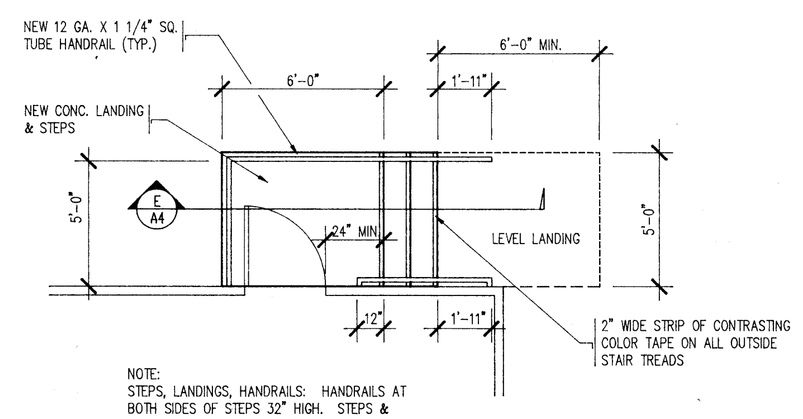

NOTE:
STEPS, LANDINGS, HANDRAILS: HANDRAILS AT BOTH SIDES OF STEPS 32" HIGH. STEPS & LANDING TO HAVE NON–SLIP SURFACE.

STANDARD STEPS PLAN (Y)

SCALE : 1/4" = 1'-0"

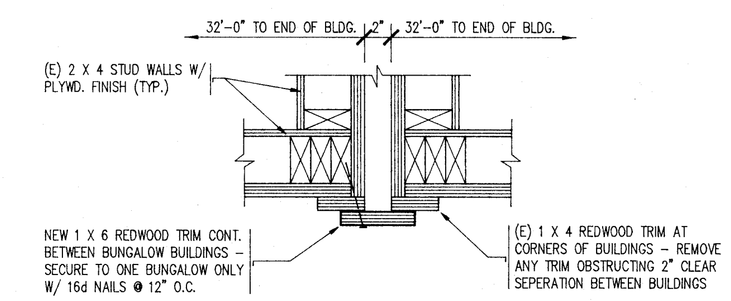

6 BUILDING SEPERATION

SCALE : 1 1/2" = 1'-0"

FIRE MARSHAL

A.C.S.

IDENTIFICATION STAMP
Department of General Services
Office of State Architect
JUN 29 1990
A54430 J.W.

O.S.A.

Glenn Hartzell A.I.A.
26 'H' STREET , 93304 (805) 324-6416
P.O. BOX 2344 , 93303 , BAKERSFIELD , CALIFORNIA
ARCHITECT C-10298 DATE 5-17-90

BAKERSFIELD CITY SCHOOL DISTRICT
BY RESOLUTION OF THE BOARD OF TRUSTEES
APPROVED : _____ DATE _____

DATE	DRAWN
6-11-90	B F

SECTIONS ~ DETAILS
(RELOCATE BUNGALOW CLASSROOMS)
BAKERSFIELD CITY SCHOOL DISTRICT
1300 BAKER STREET
BAKERSFIELD , KERN COUNTY , CALIFORNIA

JOB NO. 122

SHEET NO. A4

SHEET 4 OF 5

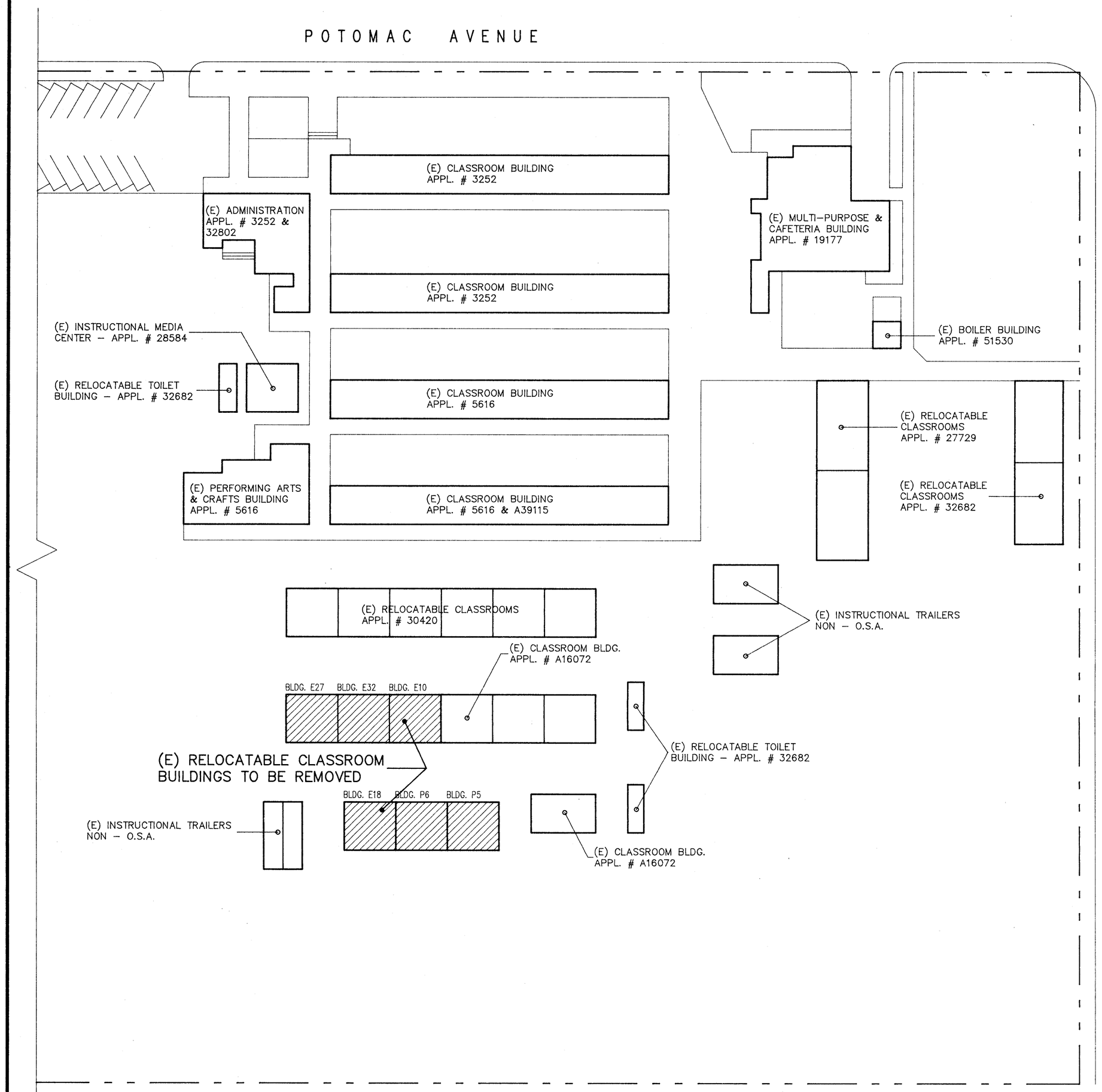

MT. VERNON SCHOOL 2161 POTOMAC AVENUE

SITE PLAN

SCALE : 1" = 40'-0"

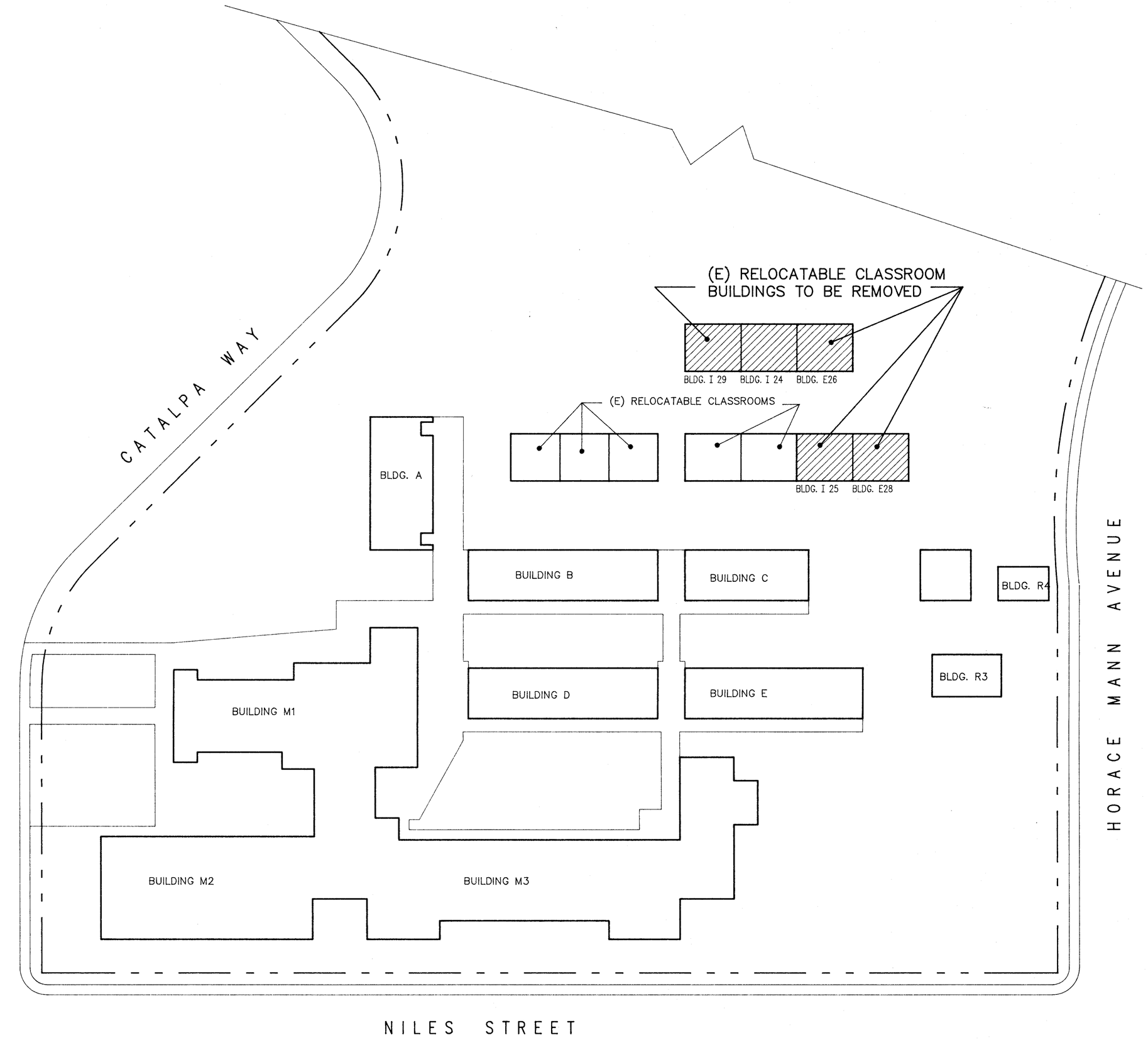

HORACE MANN SCHOOL 2710 NILES STREET

SITE PLAN

SCALE : 1" = 40'-0"

FIRE MARSHAL

A.C.S.

O.S.A.

Glenn Hartzell A.I.A.
26 "H" STREET, 93304 (805) 324-6416
P.O. BOX 2344, 93303, BAKERSFIELD, CALIFORNIA
ARCHITECT C-10298 Glenn Hartzell DATE 6-11-90

BAKERSFIELD CITY SCHOOL DISTRICT
BY RESOLUTION OF THE BOARD OF TRUSTEES APPROVED: _____ DATE

DATE 6-11-90
DRAWN B F

MT. VERNON SCHOOL & HORACE MANN SCHOOL SITE PLANS

(RELOCATE BUNGALOW CLASSROOMS) BAKERSFIELD CITY SCHOOL DISTRICT

1300 BAKER STREET
BAKERSFIELD, KERN COUNTY, CALIFORNIA

JOB NO. 122

SHEET NO. A5

SHEET 5 OF 5

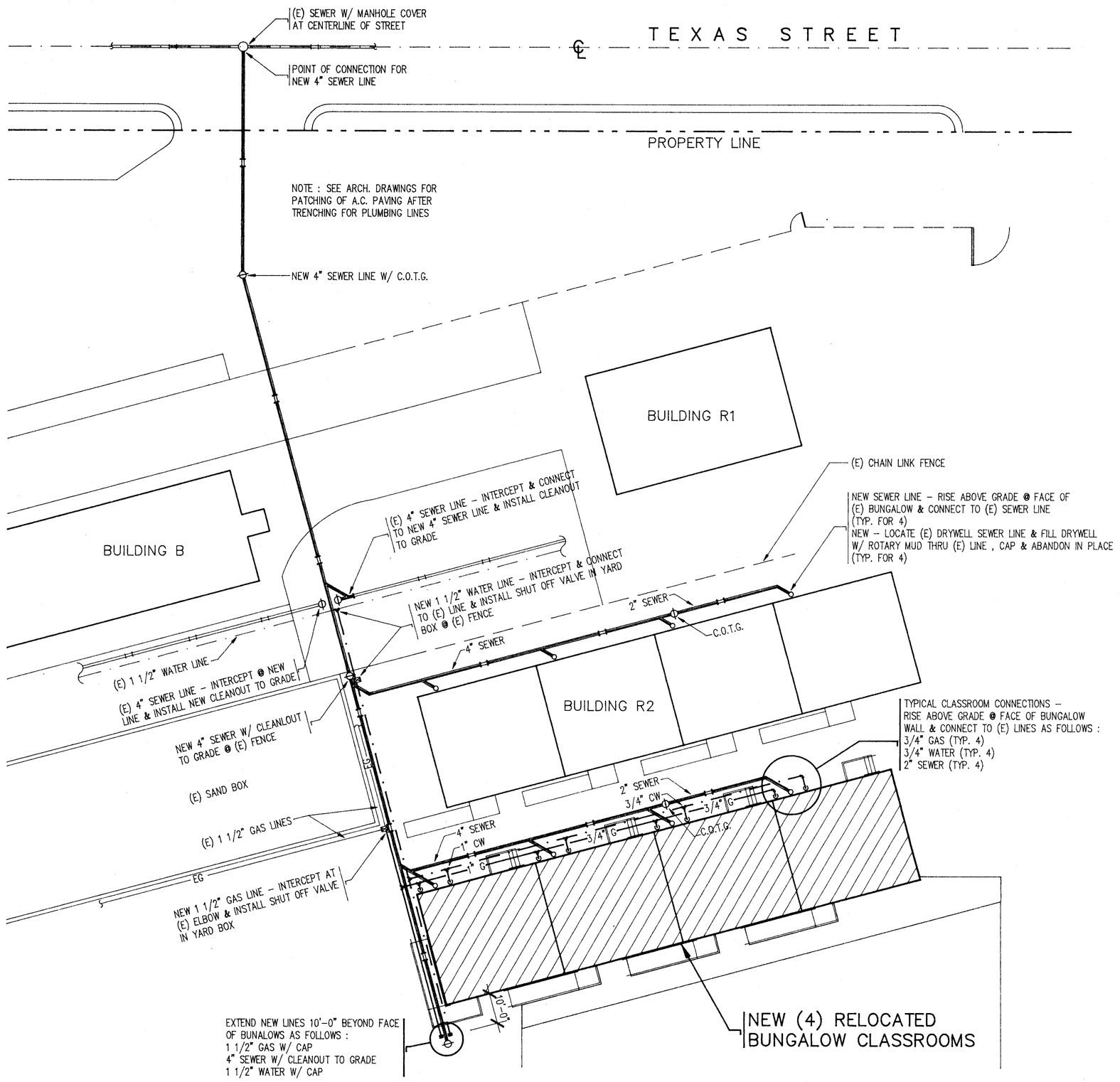

FREMONT ELEMENTARY SCHOOL

SCALE : 1" = 20'-0"

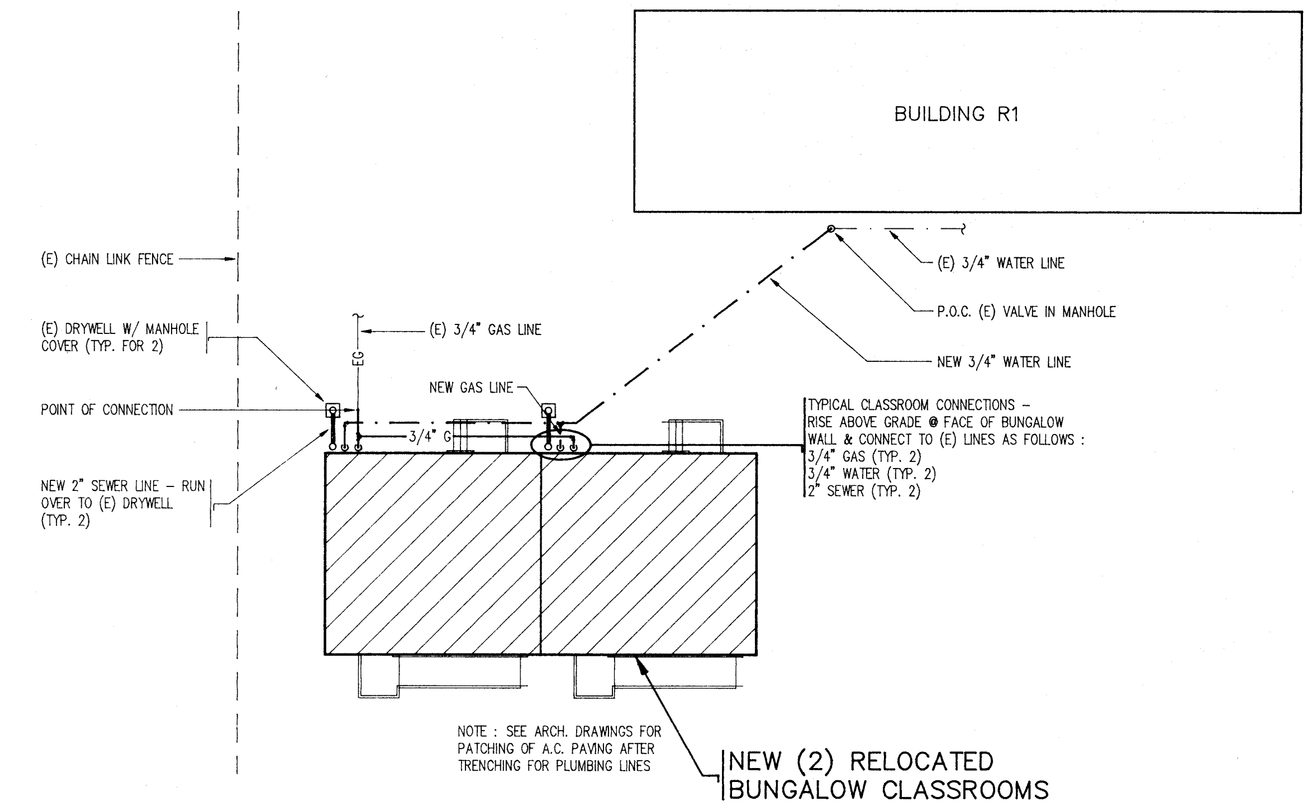

SIERRA JR. HIGH SCHOOL

SCALE : 1/16" = 1'-0"

GENERAL SPECIFICATIONS

1. ALL SOIL, WASTE, VENT, DRAINAGE LINES TO BE CAST IRON W/ MG COUPLING.
2. EXTERIOR CLEANOUTS #4253, SURFACE AREAS, USE #4425 ON NON SURFACE AREA PROVIDE 16"X8" CAST CONCRETE RING AT TOP OF BOX & FLUSH WITH GRADE.
3. ALL SOIL & WASTE LINES TO SLOPE 2% MIN. VERIFY INVERTS BEFORE STARTING WORK.
4. WATER LINES OUTSIDE OF BUILDING TO BE SCHEDULE 80 PVC INSTALL A 12 GAGE COPPER WIRE MARKER LINE ON PVC PIPE. ALL JOINTS TO BE HEAT WELDED (DO NOT USE GLUE OR SOLVENT).
5. ALL WATER LINES OUTSIDE TO BE BURIED BELOW VERIFIED FROST LINE
6. TEST ALL SOIL, WASTE, VENT, DRAINAGE, WATER & GAS LINES. SYSTEM SHALL SHOW NO LOSS IN PRESSURE AFTER A MINIMUM DURATION OF FOUR (4) HOURS OF PRESSURE INDICATED.
   1. SOIL, WASTE, SEWER, VENT LINES FILL W/WATER TO TOP OF HIGHEST VENT.
   2. WATER PIPING 100 PSI TEST WITH WATER.
   3. GAS PIPING 50 PSI TEST WITH AIR, SOAP, AND WATER.
7. REPAIR ALL LANDSCAPING AREAS TO ORIGINAL CONDITION.
8. GAS LINES TO BE SCHEDULE 40 BLACK STEEL PIPE W/40 MIL TAPE XTRU COAST ON UNDERGROUND PIPE. HOLIDAY TEST IN PRESENSE OF ENGINEER.
9. DISINFECTION OF DOMESTIC WATER SYSTEMS. DISINFECT ALL DOMESTIC WATER PIPING SYSTEMS.
   USE. DISINFECT TO BE AQUEOUS SOLUTION OF CHLORINE GAS OR OF SODIUM OR CALCIUM HYPOCHLORIDE.
   TEST TO BE PERFORMED IN COOPERATION WITH REPRESENTATIVE OF THE LOCAL HEALTH DEPARTMENT HAVING JURISDICTION AND WITNESSED BY A REPRESENTATIVE OF AN APPROVED LABORATORY OR THE ARCHITECT. DURING PERIOD OF TEST, SIGNS SHALL BE POSTED AT EACH WATER OUTLET STATING "CHLORINATION – DO NOT DRINK" PROCEDURE: SYSTEMS TO BE THOROUGHLY FLUSHED WITH WATER AT CITY PRESSURE. AFTER FLUSHING, ALL OUTLETS SHALL BE OPENED TO ALLOW A SLOW TRICKLE OF WATER. CHLORINE SOLUTION SHALL BE SLOWLY PUMPED AT CONTINUOUS RATE INTO VALVE OR SERVICE COCK NEAR CITY CONNECTION. PUMPING TO CONTINUE UNTIL AN ORTHOTOLIDINE TEST AT EACH OUTLET SHOWS CHLORINE CONCENTRATION 50PPM. SHUT ALL OUTLETS AND CITY SERVICE, MAINTAINING CHLORINE IN SYSTEM FOR 24 HOUR PERIOD.
   AT END OF PERIOD, TEST EACH OUTLET FOR CHLORINE RESIDULE OF 50 PPM. IF SYSTEM DOES NOT MEET TEST, REPEAT DISINFECTION. FOLLOW BY THOROUGHLY FLUSHING SYSTEM WITH CITY WATER UNTIL CHLORINE CONCENTRATION AT EACH OUTLET IS LESS THAN 0.5PPM. OBTAIN CERTIFICATE OF BACTERIOLOGICAL PURITY FROM HEATH DEPARTMENT AND THE TESTING LABORATORY AND DELIVER TO OWNER THROUGH ARCHITECT.

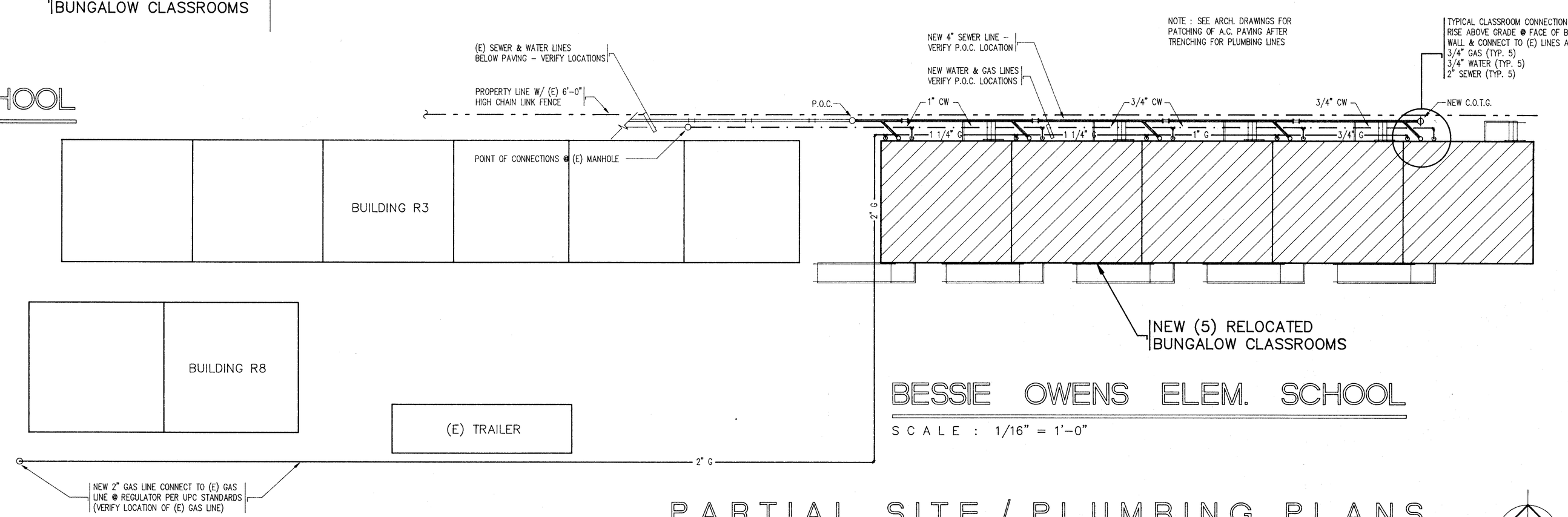

BESSIE OWENS ELEM. SCHOOL

SCALE : 1/16" = 1'-0"

PARTIAL SITE / PLUMBING PLANS

SCALE : AS SHOWN

FIRE MARSHAL

A.C.S.

O.S.A.

Glenn Hartzell A.I.A.
26 'H' STREET , 93304 (805) 324-6416
P.O. BOX 2344 , 93303 , BAKERSFIELD , CALIFORNIA
ARCHITECT C-10298 DATE 6-11-90

BAKERSFIELD CITY SCHOOL DISTRICT

BY RESOLUTION OF THE BOARD OF TRUSTEES APPROVED : _____ DATE _____

DATE	DRAWN
6-11-90	J A

PARTIAL SITE / PLUMBING PLANS ~ GENERAL SPECIFICATIONS

(RELOCATE BUNGALOW CLASSROOMS)

BAKERSFIELD CITY SCHOOL DISTRICT

1300 BAKER STREET
BAKERSFIELD , KERN COUNTY , CALIFORNIA

JOB NO. 122

SHEET NO. P1

SHEET 1 OF 1

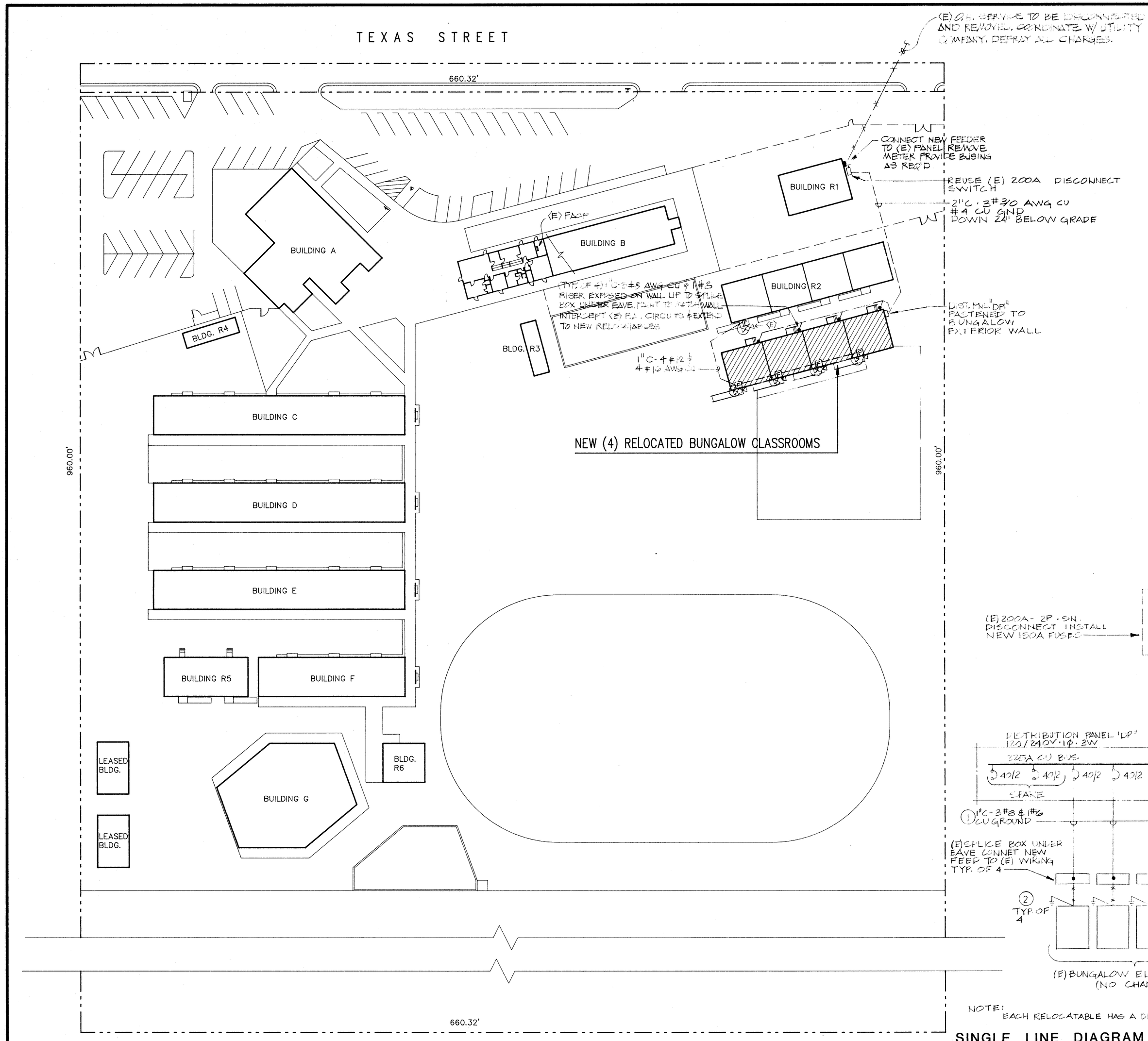

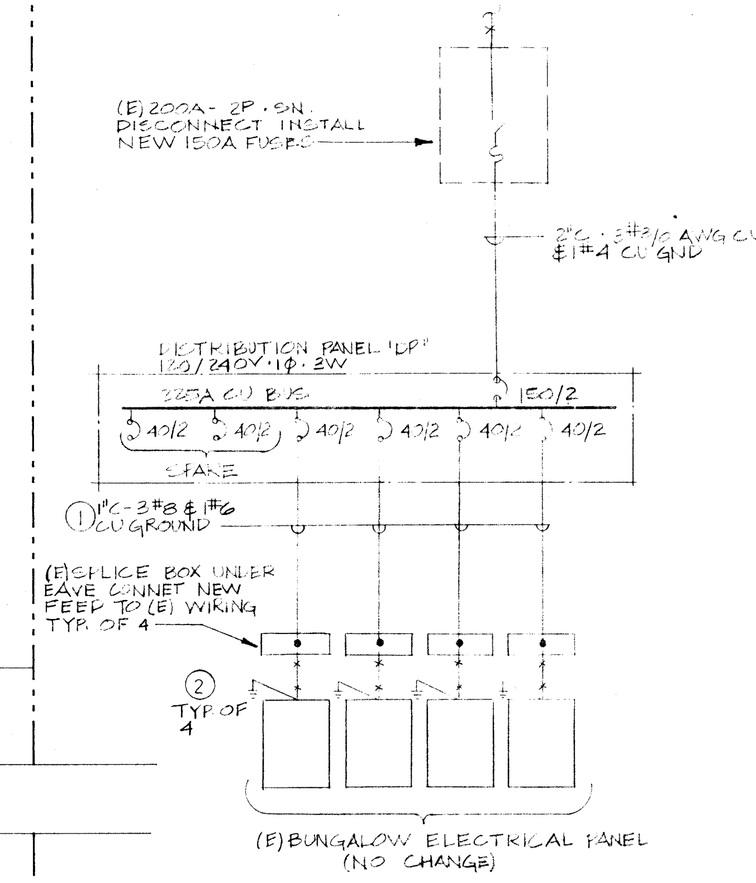

NOTE:
EACH RELOCATABLE HAS A DEMAND LOAD OF 20 AMPS

SINGLE LINE DIAGRAM

NOT TO SCALE

(2) E-1

SYMBOL SCHEDULE

SYMBOL	NAME	DESCRIPTION
(N)	DESIGNATES NEW ITEM	
(E)	DESIGNATES EXISTING ITEM	
	ELECTRICAL PANEL	
	(E) ELECTRICAL SWITCHBOARD	
	WIRING UNDERGROUND	SEE PLANS FOR SIZES
	WIRING EXPOSED	
	CONDUIT RISER	
	(E) WIRING	
	PULL BOX	SEE DETAIL
	FIRE ALARM PULL STATION MTD. @ +48"	PYROTRONICS #MS-151 CSFM #7150-0667:36
	FIRE ALARM HORN MTD. @ +84"	PYROTRONICS #HDC-24 CSFM #7135-0667:130

GROUNDING NOTES:

1. ALL GROUNDING PER C.C.R. TITLE 24
2. GROUND BOND BUILDING AND ALL METALLIC PIPES, GAS, WATER, ETC.
3. TEST GROUND AND CERTIFY IN WRITING, 25 OHMS OR LESS, GROUND READINGS. ADD GROUND RODS AS REQUIRED TO OBTAIN GROUND READING REQUIREMENT.

FIRE DETECTION SYSTEM NOTES:

1. ALL WIRING IS SHOWN DIAGRAMMATICALLY. CONTRACTOR MAY VARY SEQUENCE OR CIRCUITRY; HOWEVER, ALL CIRCUITS SHALL BE CONTINUOUS AND SUPERVISED FROM DEVICE TO DEVICE OR FAT TO DEVICE OR FCP TO FAT OR FAT TO FAT. NO PARALLEL BRANCHING SHALL BE ALLOWED. ANY CONNECTION OR ANY BREAK IN ANY CONDUCTOR SHALL BE BY TERMINAL CONNECTION AT A DEVICE OR AT A FAT ONLY.
2. ALL CONNECTIONS SHALL BE PROPERLY LABELED BY CONDUCTOR AND SHALL HAVE STAKE-ON LUG CONNECTORS.
3. FIRE ALARM TERMINAL CABINETS SHALL HAVE SUFFICIENT SPACE, TERMINAL BOARDS AND SCREW TERMINAL CONNECTORS TO ALLOW CONNECTION OF ALL CONDUCTORS SHOWN. CONTRACTOR SHALL BE REQUIRED TO SUBMIT WITH HIS OTHER SHOP DRAWINGS, DETAILED DRAWINGS OF HIS PROPOSED CONNECTIONS AT EACH FIRE ALARM TERMINAL CABINET PRIOR TO COMMENCING ANY WORK.
4. ALL CONDUCTORS SHOWN SHALL BE #16AWG, SOLID COPPER, UNLESS OTHERWISE NOTED.
5. * WRITTEN CERTIFICATION BY THE FIRE ALARM EQUIPMENT DISTRIBUTOR (OR VENDOR OR MANUFACTURER) SHALL BE SUBMITTED TO THE ARCHITECT (WITH COPIES TO THE ELECTRICAL ENGINEER AND THE STATE FIRE MARSHAL) AND THAT THE INSTALLATION INCLUDES TESTING AND OPERATION CONFORMS IN ALL RESPECTS TO THE REQUIREMENTS AS SET FORTH IN TITLE 19 OF THE CALIFORNIA CODE OF REGULATIONS AND PART 3, ARTICLE 3-760 OF TITLE 24 OF THE C.C.R. AND SECTION 2-809.
6. * INSTALLATION OF THE FIRE ALARM SYSTEMS SHALL NOT BE STARTED UNTIL WORKING DRAWINGS, INCLUDING STATE FIRE MARSHAL LISTING NUMBERS OF ALL FIRE ALARM COMPONENTS, ARE SUBMITTED TO AND APPROVED BY THE STATE FIRE MARSHAL AT THE OFFICE OF THE STATE ARCHITECT.
7. * UPON COMPLETION OF THE INSTALLATION OF THE FIRE ALARM SYSTEM, A SATISFACTORY TEST OF THE ENTIRE SYSTEM SHALL BE MADE IN THE PRESENCE OF THE ENFORCING AGENCY.

* INSTALLATION OF FIRE ALARM SYSTEM SHALL NOT BE STARTED UNTIL DETAIL PLANS, SPECIFICATIONS AND ENGINEERING CALCULATIONS HAVE BEEN ACCEPTED AND SIGNED BY THE ARCHITECT OR STRUCTURAL ENGINEER IN GENERAL CHARGE OF DESIGN AND THE SIGNATURE OF THE ARCHITECT OR PROFESSIONAL ENGINEER WHO HAS BEEN DELEGATED RESPONSIBILITY COVERING THE WORK SHOWN ON A PARTICULAR PLAN OR SPECIFICATION, AND APPROVED BY THE OFFICE OF THE STATE ARCHITECT. CAMPUS SHALL HAVE THE SAME TYPE OF ALARM THROUGHOUT - IE. MANUAL - AUTOMATIC

SCHOOL EQUIPMENT ANCHORAGE

ALL MECHANICAL AND ELECTRICAL EQUIPMENT SHALL BE BRACED OR ANCHORED TO RESIST HORIZONTAL FORCE ACTING IN ANY DIRECTION USING THE FOLLOWING CRITERIA:

FIXED EQUIPMENT ON GRADE	20% OF OPERATING WEIGHT
FIXED EQUIPMENT ON STRUCTURE	30% OF OPERATING WEIGHT
~~EMERGENCY POWER EQUIPMENT ON GRADE~~	~~40% OF OPERATING WEIGHT~~
~~EMERGENCY POWER EQUIPMENT ON STRUCTURE~~	~~60% OF OPERATING WEIGHT~~

FOR FLEXIBLY MOUNTED EQUIPMENT USE 4X THE ABOVE VALUES.
SIMULTANEOUS VERTICAL FORCE - USE 1/3X HORIZONTAL FORCE.

WHERE ANCHORAGE DETAILS ARE NOT SHOWN ON THE DRAWINGS, FOR EQUIPMENT 400 POUNDS OR LESS, THE FIELD INSTALLATION SHALL BE SUBJECT TO THE APPROVAL OF THE MECHANICAL AND ELECTRICAL ENGINEER AND THE FIELD REPRESENTATIVE OF THE OFFICE OF THE STATE ARCHITECT.

"The power source has been investigated and is adequate for the load"

By James W. Graham EE5101

ELECTRICAL SITE PLAN

SCALE : 1" = 40'-0"

FREMONT ELEMENTARY SCHOOL 607 TEXAS STREET

FIRE MARSHAL

A.C.S.

IDENTIFICATION STAMP
Department of General Services
JUN 29 1990
A54430

O.S.A.

Glenn Hartzell A.I.A.
26 'H' STREET , 93304 (805) 324-6416
P.O. BOX 2344 , 93303 , BAKERSFIELD , CALIFORNIA
ARCHITECT C-10298 DATE 6-4-90

INTERSTATE ENGINEERING, INC.
Electrical Engineers
127 East Belmont Ave.
Fresno, CA 93701
(209) 486-5191

BAKERSFIELD CITY SCHOOL DISTRICT
BY RESOLUTION OF THE BOARD OF TRUSTEES APPROVED : _____ DATE

FREMONT ELEM. SCHOOL SITE PLAN ~NOTES ~DETAIL~ SCHEDULE

DATE 6-11-90 DRAWN

(RELOCATE BUNGALOW CLASSROOMS)
BAKERSFIELD CITY SCHOOL DISTRICT
1300 BAKER STREET
BAKERSFIELD , KERN COUNTY , CALIFORNIA

JOB NO. 122

SHEET NO. E-1

SHEET 1 OF 3

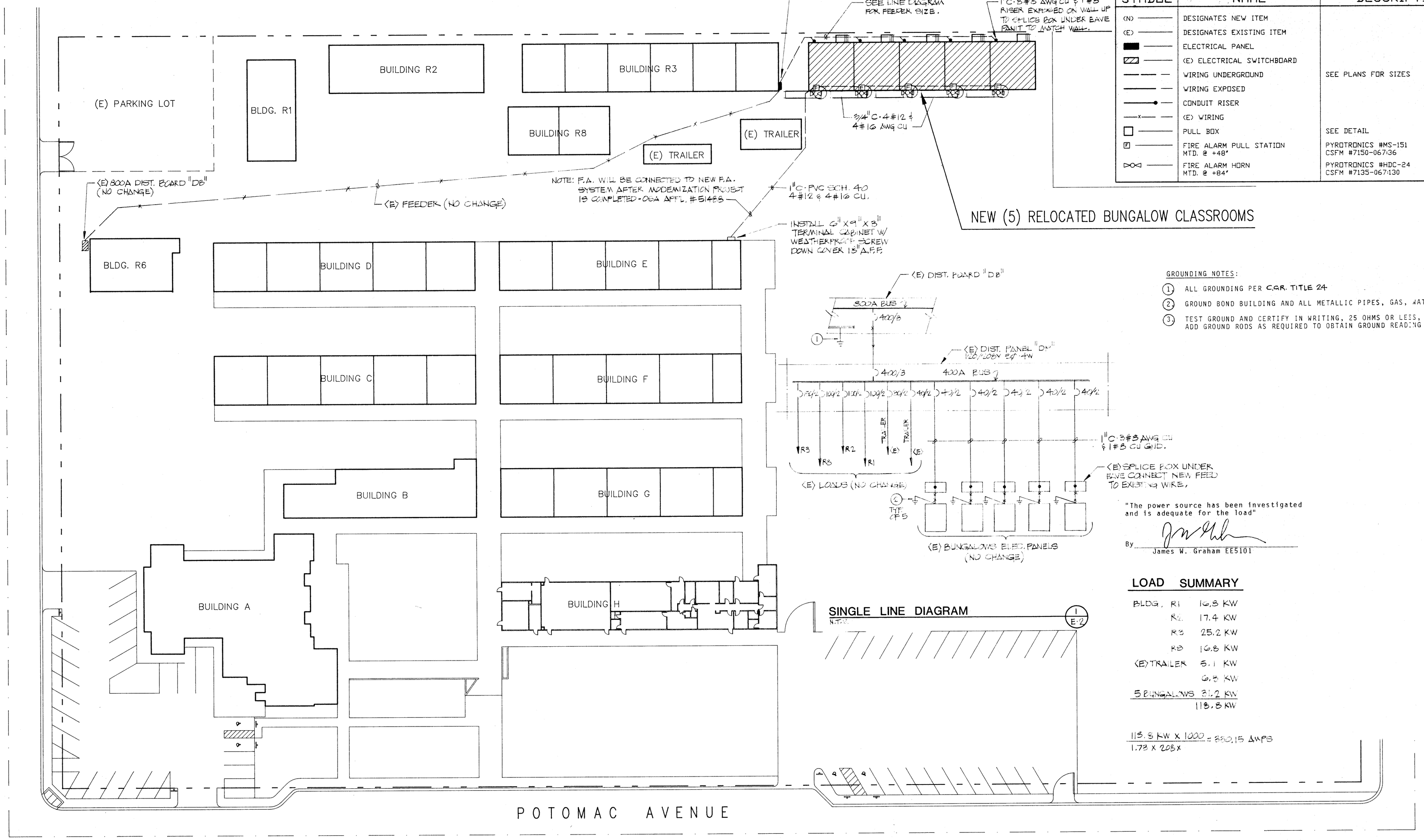

SYMBOL SCHEDULE

SYMBOL	NAME	DESCRIPTION
(N)	DESIGNATES NEW ITEM	
(E)	DESIGNATES EXISTING ITEM	
	ELECTRICAL PANEL	
	(E) ELECTRICAL SWITCHBOARD	
	WIRING UNDERGROUND	SEE PLANS FOR SIZES
	WIRING EXPOSED	
	CONDUIT RISER	
	(E) WIRING	
	PULL BOX	SEE DETAIL
	FIRE ALARM PULL STATION MTD. @ +48"	PYROTRONICS #MS-151 CSFM #7150-0673-36
	FIRE ALARM HORN MTD. @ +84"	PYROTRONICS #HDC-24 CSFM #7135-0673-130

GROUNDING NOTES:

1. ALL GROUNDING PER C.E.C. TITLE 24
2. GROUND BOND BUILDING AND ALL METALLIC PIPES, GAS, WATER, ETC.
3. TEST GROUND AND CERTIFY IN WRITING, 25 OHMS OR LESS, GROUND READINGS. ADD GROUND RODS AS REQUIRED TO OBTAIN GROUND READING REQUIREMENT.

LOAD SUMMARY

BLDG. R1	16.8 KW
R2	17.4 KW
R3	25.2 KW
R8	16.8 KW
(E) TRAILER	5.1 KW
	6.8 KW
5 BUNGALOWS	31.2 KW
	118.8 KW

118.8 KW X 1000 / 1.73 X 208 X = 330.15 AMPS

ELECTRICAL SITE PLAN

SCALE : 1" = 30'-0"

BESSIE OWENS ELEMENTARY SCHOOL

315 POTOMAC AVENUE

FIRE MARSHAL

A.C.S.

IDENTIFICATION STAMP
Department of General Services
Office of Project Development
JUN 29 1990
PA 54430 J.W.

O.S.A.

Glenn Hartzell A.I.A.
26 'H' STREET, 93304 (805) 324-6416
P.O. BOX 2344, 93303, BAKERSFIELD, CALIFORNIA
ARCHITECT C-10298 DATE 6-11-90

INTERSTATE ENGINEERING, INC.
Electrical Engineer 5101
127 East Belmont Ave.
Fresno, CA 93701
(209) 485-1151

BAKERSFIELD CITY SCHOOL DISTRICT
BY RESOLUTION OF THE BOARD OF TRUSTEES APPROVED: _____ DATE

BESSIE OWENS ELEM SCHOOL SITE PLAN - SINGLE LINE DIAGRAM
(RELOCATE BUNGALOW CLASSROOMS)
BAKERSFIELD CITY SCHOOL DISTRICT
1300 BAKER STREET
BAKERSFIELD, KERN COUNTY, CALIFORNIA

DATE 6-11-90
DRAWN

JOB NO. 122

SHEET NO. E-2

SHEET 2 OF 3

ELECTRICAL SPECIFICATIONS

SCOPE: Furnish all labor and new materials necessary for a complete and satisfactory operating electrical system for illumination, power and equipment in accordance with governing codes.

Wiring systems, disconnect switches and electrical connections to equipment covered by other sections of these specifications.

All hangers, anchors, sleeves, chases and supports and all electrical equipment and materials.

Extend existing fire alarm system.

All work and materials shall be in full accordance with the governing codes and rules including the National Electric Code, 1987 Edition. Nothing in these plans and specifications is to be construed to permit work not conforming to these Codes.

Submit six copies of equipment lists for power devices and any other special equipment. Contractor is to review and sign these indicating his review.

Include payment of all required insurances, electrical permits, fees and taxes.

Prepare record drawings of work installed.

LOCAL CONDITIONS AND PLANS: Before submitting a proposal the Contractor shall visit the site and fully inform himself of all existing conditions and limitations applying to the work. If after such examinations and study it appears that any change in the drawings and specifications should be allowed, the bidder shall so state in writing together with any change in cost involved.

GENERAL COORDINATION: The drawings indicate diagrammatically the desired location or arrangement of conduit runs, outlets, equipment, etc., and are to be followed as closely as possible. It shall be the contractor's responsibility to verify and coordinate the location of all outlets and raceways with other trades.

CUTTING, PATCHING, MATCHING:

This Contractor shall do all cutting necessary for the proper installation of his work and shall repair any damage done by himself or his workmen in kind and shall coordinate with that of other parties. Wherever possible, work shall be done in a concealed and neat workmanlike manner, necessitating the least amount of cutting of studs, plates and woodwork, and such cutting or notching is allowed only after consultation with and by permission of the Engineer.

EARTHQUAKE RESTRAINT: All electrical equipment and connections shall be designed to resist lateral seismic forces equal to 0.33 of equipment weight with allowable working code capacity increased by one-third, or 0.5 of the weight yield capacity.

MECHANICAL AND OTHER SPECIAL EQUIPMENT: Prior to commencing construction this Contractor shall arrange a conference with the Mechanical and Plumbing Contractors and sub-contractors as well as equipment suppliers and shall verify type, sizes, location, requirements, controls and diagrams of all equipment furnished by them. He shall, in writing, inform the Electrical Engineer that all phases of coordination of this equipment have been covered.

GUARANTEE: The Contractor agrees to replace any damage or defect in any part of the installation which may fail due to defective material and/or workmanship or failure to follow plans and specifications for a period of one year after final acceptance. He shall repair any damages to the electrical finishes.

RACEWAYS:

All conduit installed for general building wiring in hollow dry spaces of walls and ceiling shall be in EMT.

Flex may be used where fishing down existing walls is necessary and shall have a GWG. Sealtite flex not over 18" shall be used to feed mechanical units and shall be supported adequately.

CONDUCTORS: Furnish and install a copper THWN 600 volt conductor system for proper connection and operation of all equipment. Wire #10 and smaller shall be solid copper, see below. All conductors entering any panel or terminal box shall be identified by use of Brady Labels. Wiring shall be color coded.

DISCONNECT SWITCHES: Shall be NEMA 3R, properly supported with proper size "FRN" fuses.

PANELBOARDS: Shall be in accordance with plans in locations shown with door and lock. All branch circuit conductors shall be neatly served with Ty-Rap's and permanently tagged. They shall have typed panel schedules mounted behind plastic on doors. All existing panel schedules to be verified and updated including all new loads.

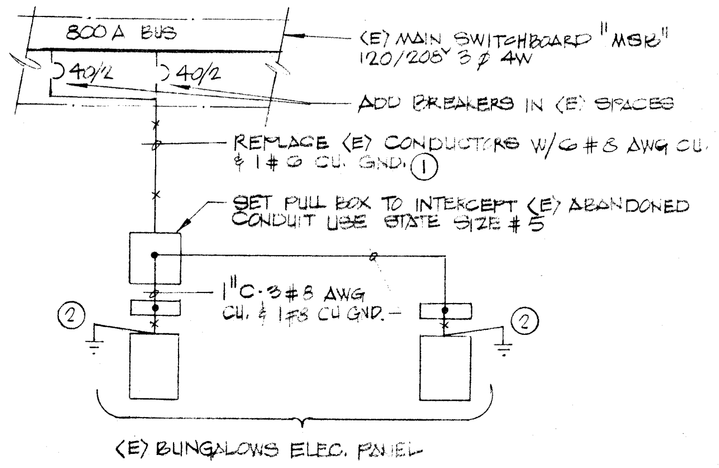

SINGLE LINE DIAGRAM 1 E-3

NOT TO SCALE

GROUNDING NOTES:

1. ALL GROUNDING PER C.C.R. TITLE 24
2. GROUND BOND BUILDING AND ALL METALLIC PIPES, GAS, WATER, ETC.
3. TEST GROUND AND CERTIFY IN WRITING, 25 OHMS OR LESS, GROUND READINGS. ADD GROUND RODS AS REQUIRED TO OBTAIN GROUND READING REQUIREMENT.

"The power source has been investigated and is adequate for the load"

By _____
James W. Graham EE5101

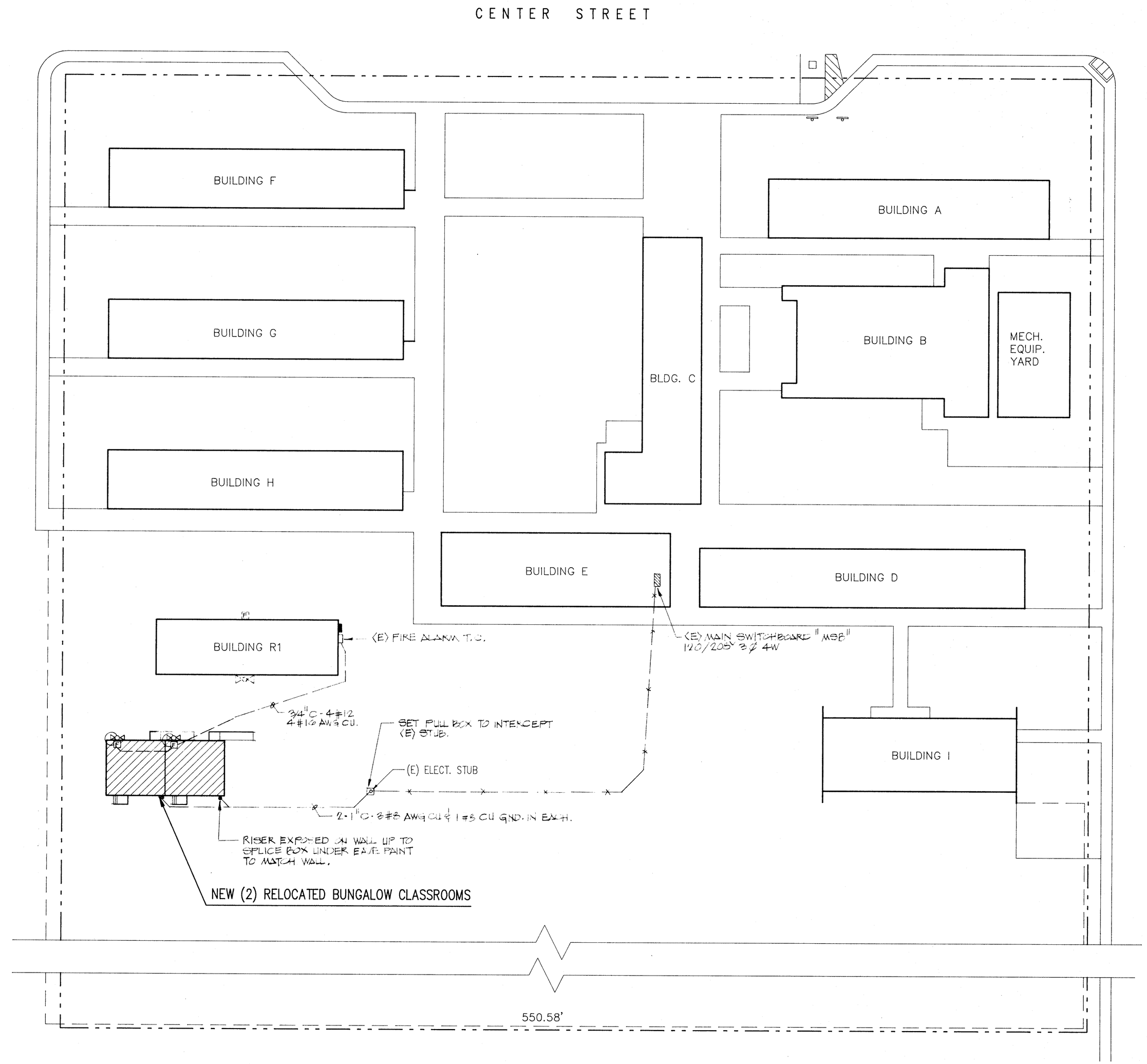

ELECTRICAL SITE PLAN

SCALE : 1" = 30'-0"

N

SIERRA JR. HIGH SCHOOL 3017 CENTER STREET

FIRE MARSHAL

A.C.S.

IDENTIFICATION STAMP
Department of General Services
Office of State Architect
JUN 29 1990
Structural Design Division
Appl. # 45 4 3 0
Stamp Applied By

O.S.A.

Glenn Hartzell A.I.A.
26 'H' STREET , 93304
P.O. BOX 2344 , 93303 , BAKERSFIELD , CALIFORNIA (805) 324-6416
ARCHITECT C-10298 DATE 6-11-90

INTERSTATE ENGINEERING, INC.
Electrical Engineer 5101
1121 E. Shaw Ave.
Fresno, CA 93701
(209) 486-1151

BAKERSFIELD CITY SCHOOL DISTRICT
BY RESOLUTION OF THE BOARD OF TRUSTEES
APPROVED : _____ DATE

DATE	DRAWN
6-11-90	

SIERRA JR. HIGH SCHOOL ~ SPECS. ~ SINGLE LINE DIAGRAM

(RELOCATE BUNGALOW CLASSROOMS)
BAKERSFIELD CITY SCHOOL DISTRICT
1300 BAKER STREET
BAKERSFIELD , KERN COUNTY , CALIFORNIA

JOB NO. 122

SHEET NO. E-3

SHEET 3 OF 3