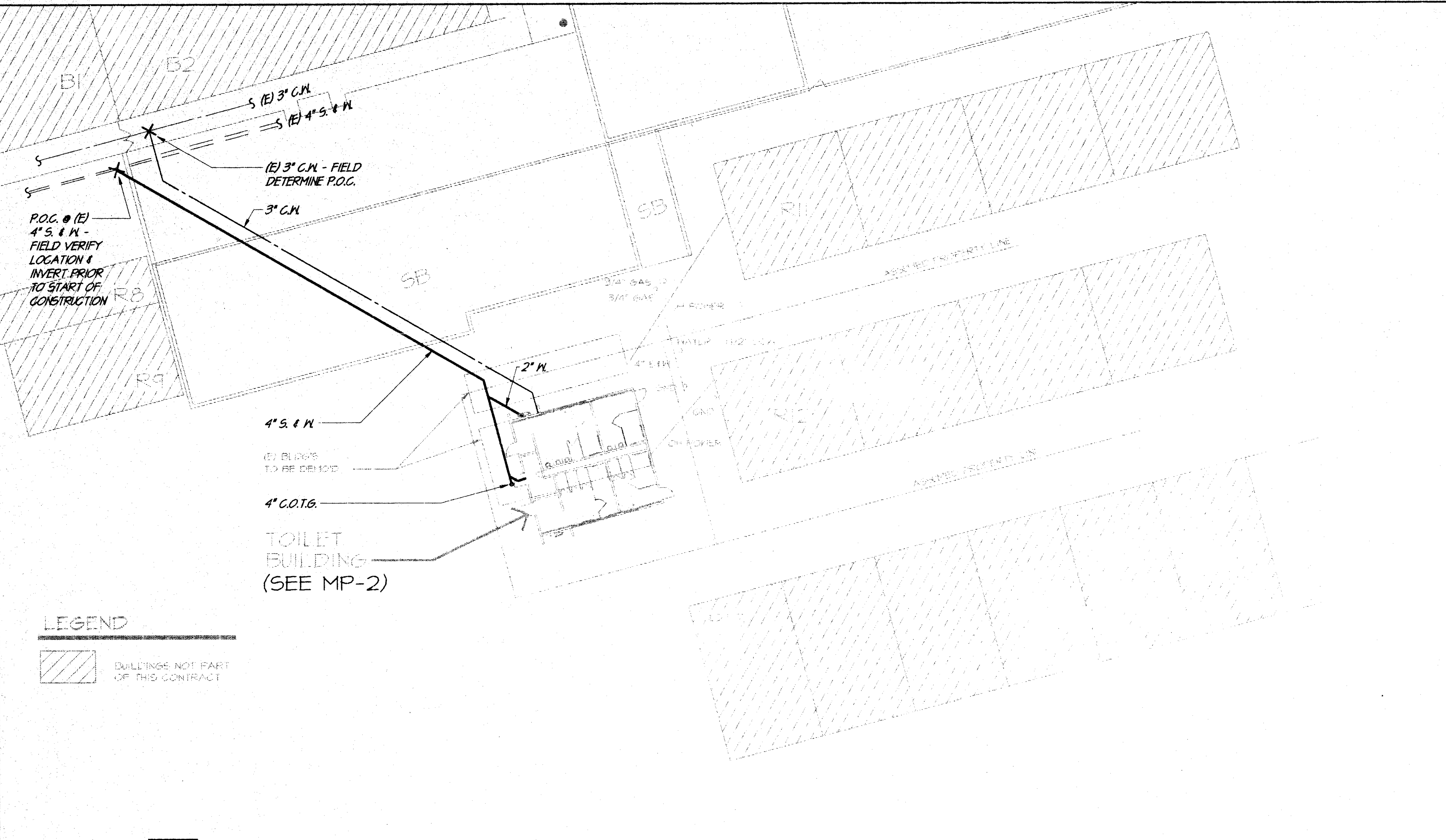

PARTIAL PLUMBING SITE PLAN - FREMONT

SCALE: 1" = 20'-0"

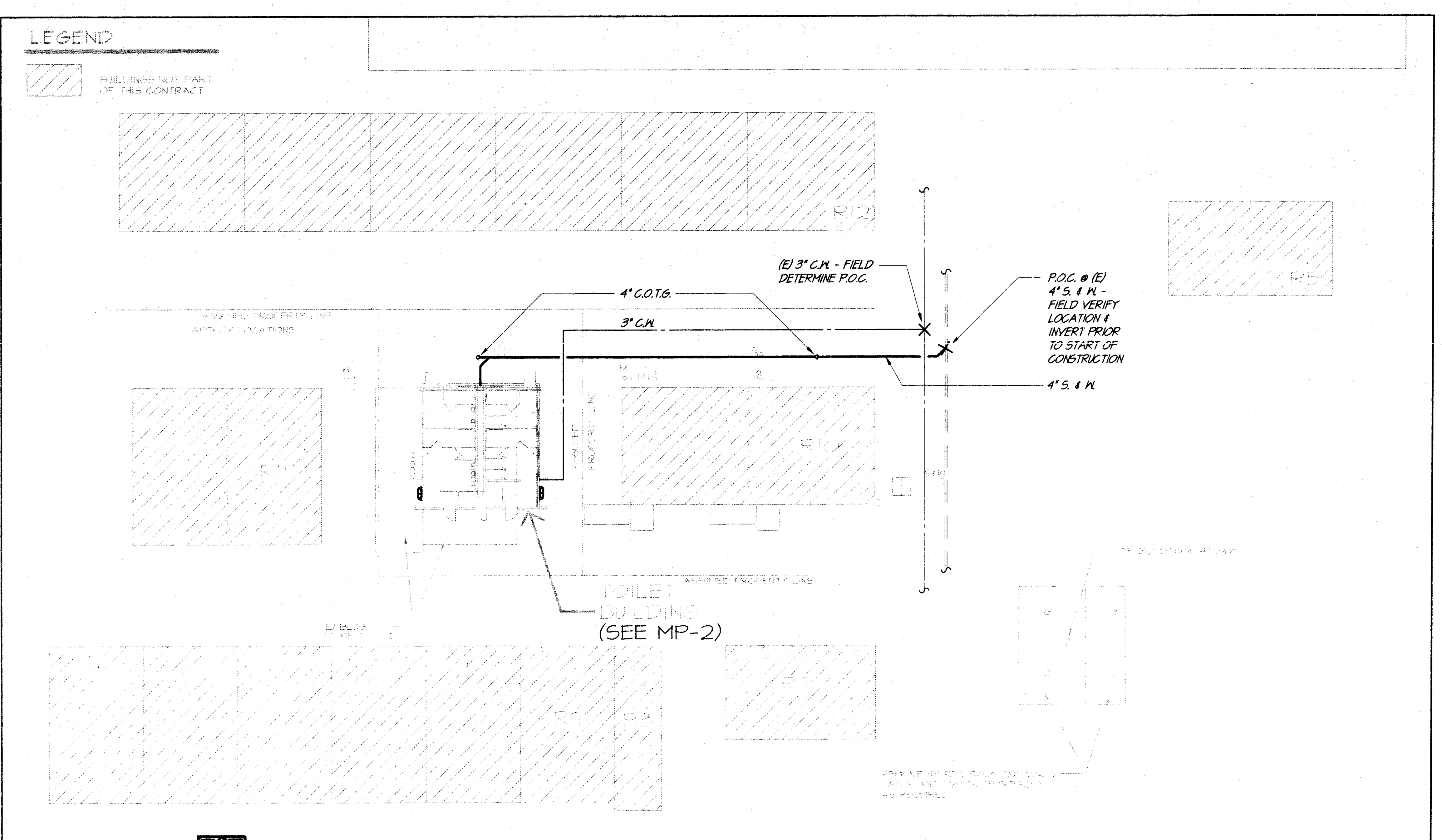

PARTIAL PLUMBING SITE PLAN - MT. VERNON

SCALE: 1" = 20'-0"

MECHANICAL EQUIPMENT SCHEDULE

RH-1 RADIANT HEATING PANEL (ELECTRIC); "Q-MARK" # CP751, 24" x 48" w/ SURFACE MOUNTING KIT.
ELECTRICAL: 750 WATTS @ 120v.-1Ø OPERATING WEIGHT; 30 lbs.

EF-1 ROOFTOP UPBLAST EXHAUST FAN; "PENN" # FX 13R, w/ SPEED CONTROLLER IN DOME, 890 CFM @ .25" S.P., 9.6 SONES, FACTORY SLOPED ROOF CURB,
ELECTRICAL: 1/6 H.P. @ 120v.-1Ø OPERATING WEIGHT 45 lbs.

GRILLE SCHEDULE

CE CEILING EXHAUST; "ANEMOSTAT" HDOS w/ O.B.D.

PLUMBING FIXTURE SCHEDULE

WC-1 Wall mounted F.V. back spud water closet, "American Standard" #2258.125 Atwall, "Olsonite" #10CC open-front white seat, "Sloan" # 152-1.6 ES-S concealed (electronically operated) flush valve, (1.6 gallons/flush) 1-1/4" C.W., 4" S. & W., 2" V.O., "J.R. Smith" #0410LY/RY no hub compact vertical carrier, see plan for flush valve trap primer accessory. Mount at A.D.A. height. (1) #EL-154 120v/24v transformer. (will accomodate up to 10 flush-valves)

WC-2 Same as WC-1 except mount at non - A.D.A. height.

UR Wall mounted back spud urinal, "American Standard" # 6506.011 Washbrook, "Sloan" # 195-1 ES-S concealed (electronically operated) flush valve, wall hanger, see architectural drawings for mounting heights, 3/4" C.W., 2" W., 1-1/2" V.O. (1) # EL-154 120v/24v transformer. (will accomodate up to 10 flush-valves)

MS Floor mounted cast iron mop sink, "American Standard" # 7740.020 Floorwell, # 7745.011 rim guard, # 7721.038 3" strainer, "Chicago" # 897 faucet with vacuum breaker and top brace, 3" trap, 3/4" H.W./C.W., 3" W., 2" V.O.

L-1 Wall hung vitreous china A.D.A. lavatory, "American Standard" # 0355.012 (20" x 18") Lucerne, # 7723.018 offset grid drain, "Symmons" single lever hot/cold faucet # S-90-FR, (2) angled wall stops with supplies, "J.R.Smith" # 0700 concealed arm support, 17 ga. C.P. trap/tailpiece, (wrap H.W. and trap/tailpiece per specifications) 1/2" H.W./C.W., 2" W., 1-1/2" V.O.

L-2 Same as L-1 except cold water only; use (1) "Symmons" # S-726 metering faucet, grid drain, (1) angled wall stop with supply.

HB-1 Recessed chrome plated wall box mounted hose bibb, "Woodford" # B75 with door, integral vacuum breaker, 3/4" C.W.

HB-2 Wall mounted C.P. bent nose brass loose tee key hose bibb, "Woodford" # 24P with integral vacuum breaker, 3/4" C.W.

FD Cast iron floor drain, "J.R. Smith" # 2005 with 5" sq. bronze grate, 2" trap with primer connection, 2" W., 1-1/2" V.O.

EWH Electric water heater, "A.O. Smith" # ELSF-15, 15 gallon glass lined tank, (1) 1500 watt element @ 120v.-1ph., T.&P. relief valve with full size discharge to outside with elbow down at 6" above grade, 3/4" C.W. to and H.W. from.

DF Wall mounted dual bubbler A.D.A. drinking fountain, "Haws" # 1441, mounting plate, cast aluminum with white epoxy finish, push button operation, 17 ga. C.P. trap/tailpiece, (1) angled wall stop with supply(ies) to each bubbler, 2" W., 1-1/2" V.O.

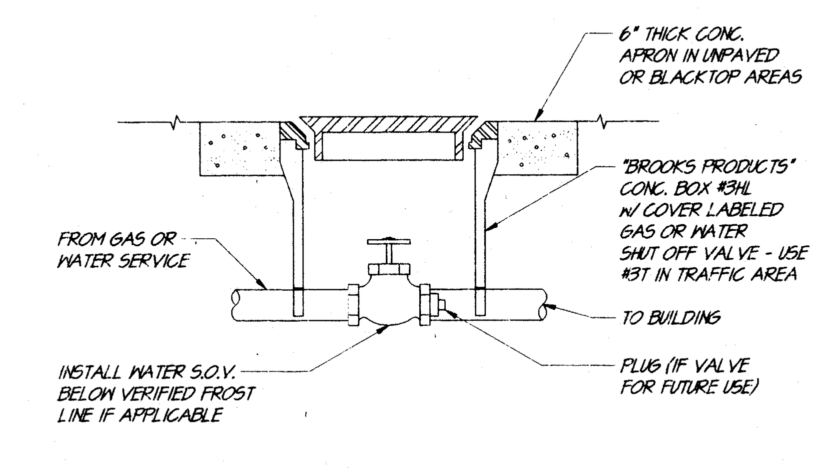

S.O.V. IN YARD BOX (A)

NOT TO SCALE

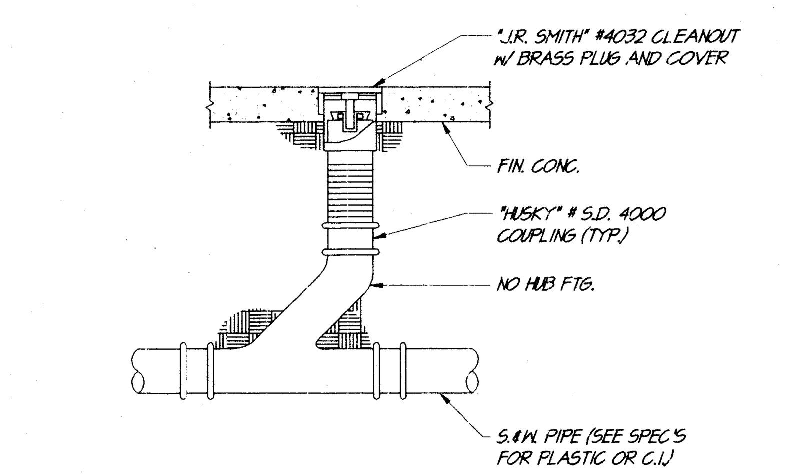

FLOOR CLEANOUT (B)

NOT TO SCALE

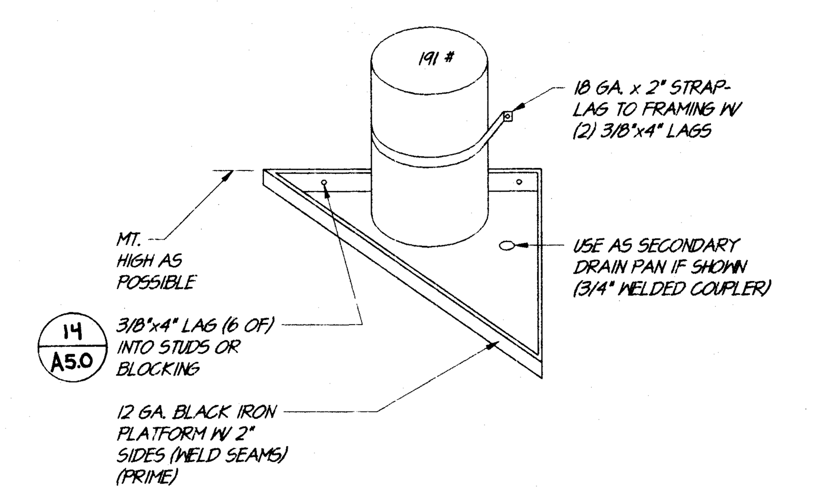

WATER HEATER MOUNTING DETAIL (C)

NOT TO SCALE

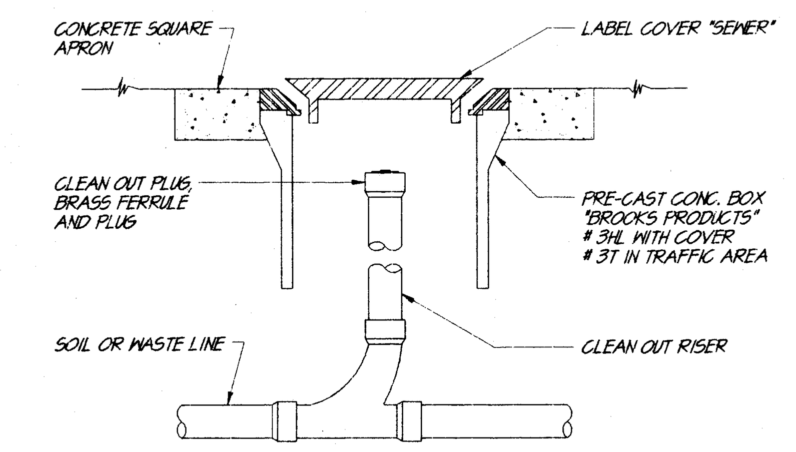

CLEAN OUT TO GRADE (D)

NOT TO SCALE

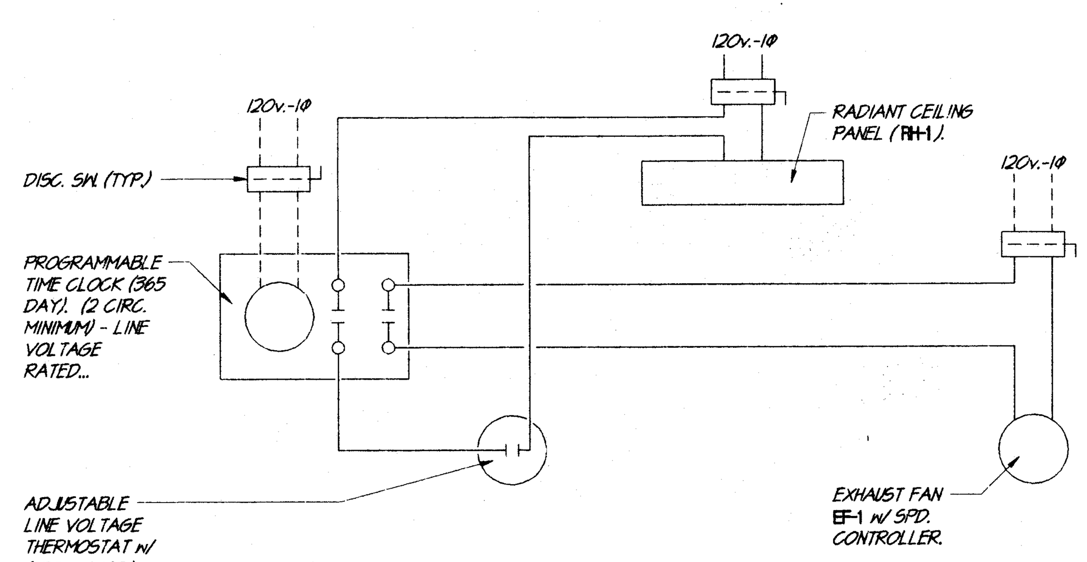

NOTE: ALL COMPONENTS PROVIDED BY MECHANICAL, WIRED BY ELECTRICAL

CONTROL DIAGRAM (E)

DIAGRAMMATIC

MDC MECHANICAL DESIGN CONCEPTS
#9941
MECHANICAL ENGINEERING SERVICES
428 Truxtun Avenue Tel #: (661) 326-1313
Bakersfield, Ca. 93301 Fax #: (661) 326-1089
PLOTTED: 1/05/00

REGISTERED PROFESSIONAL ENGINEER MARK JAMES BASKIN No. M26578 Exp. 9-30-02 MECHANICAL STATE OF CALIFORNIA

SCArchitect, Inc.
1301 L Street
Bakersfield, CA 93301
(805) 327-1632

LICENSED ARCHITECT STEPHEN J. CORBIN No. C-16788 STATE OF CALIFORNIA
Stephen J. Corbin, NCARB, AIA

IDENTIFICATION STAMP
DIV. OF THE STATE ARCHITECT
OFFICE OF REGULATION SERVICES
APPL: 03-102897
FILE: 15-6
AC FLS SV SS KC
DATE:

A NEW TOILET BUILDING AT FREMONT AND MT. VERNON

607 TEXAS ST. AND 2161 POTOMAC AVE.
FOR
BAKERSFIELD CITY SCHOOL DISTRICT
BAKERSFIELD, KERN COUNTY, CALIFORNIA

PLUMBING SITE PLANS, SCHEDULES, AND DETAILS

CHECK AND VERIFY ALL DIMENSIONS BEFORE PROCEEDING WITH THE WORK. REPORT DISCREPANCIES TO THE ARCHITECT. ALL CONSTRUCTION SHALL CONFORM TO THE C.B.C.

MARK	DATE	REVISIONS
1		
2		
3		
4		
5		

JOB NO. 970
DRAWN: M.M./S.A.
CHECKED: R.B.
DATE: 9/14/99

MP 1

1 OF 2 SHEETS