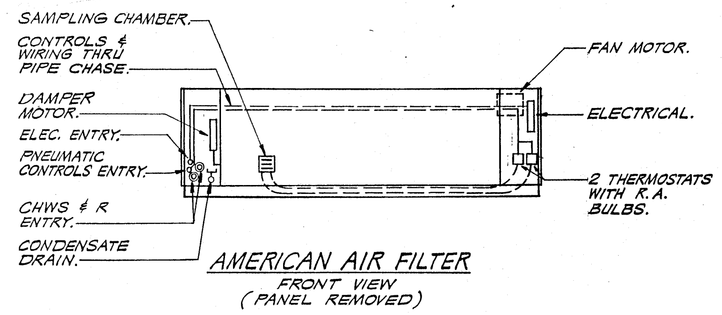

AMERICAN AIR FILTER
FRONT VIEW
(PANEL REMOVED)

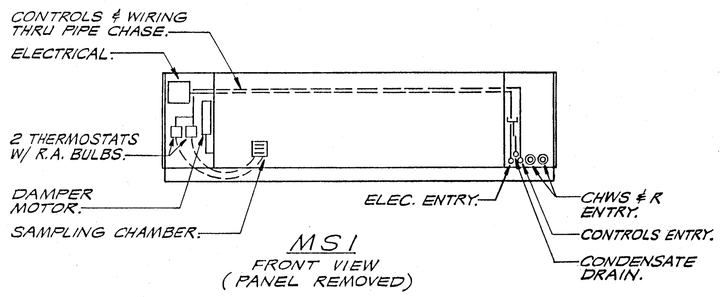

MSI
FRONT VIEW
(PANEL REMOVED)

NOTES:
1. ALL CHWS & R PIPING IN UNIT TO BE INSULATED WITH INSULATING TAPE, (1/2" TOTAL THICKNESS)
2. PIPE INSULATION AND VAPOR BARRIER TO BE CONTINUOUS THRU THE OUTSIDE WALL.

UNIT VENTILATOR CONTROLS & PIPING LOCATION

SCALE: NONE — G / M-7

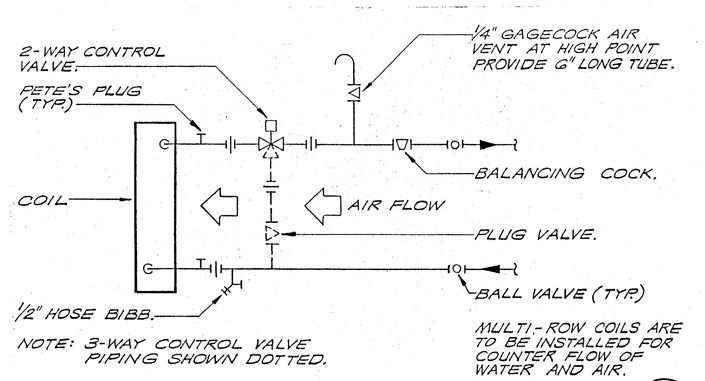

COIL PIPING DETAIL

SCALE: NONE — K / M-7

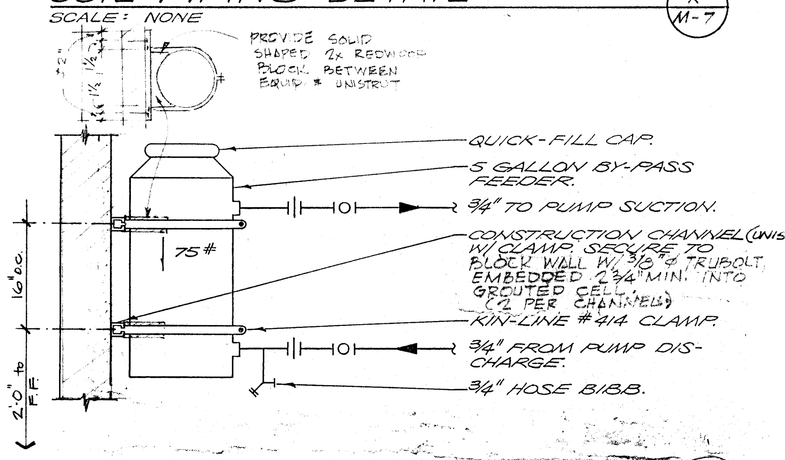

CLOSED SYSTEM BY-PASS FEEDER

SCALE: NONE — L / M-7

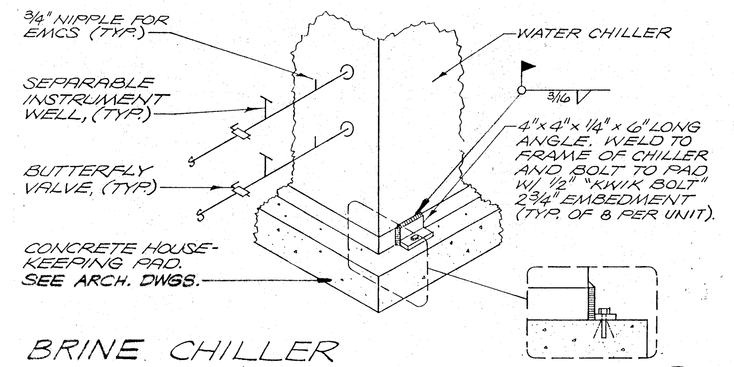

BRINE CHILLER MOUNTING & PIPING DETAIL

SCALE: NONE (INSTALLATION SHALL COMPLY W/ CHAPT. 21 1985 UMC) — E / M-7

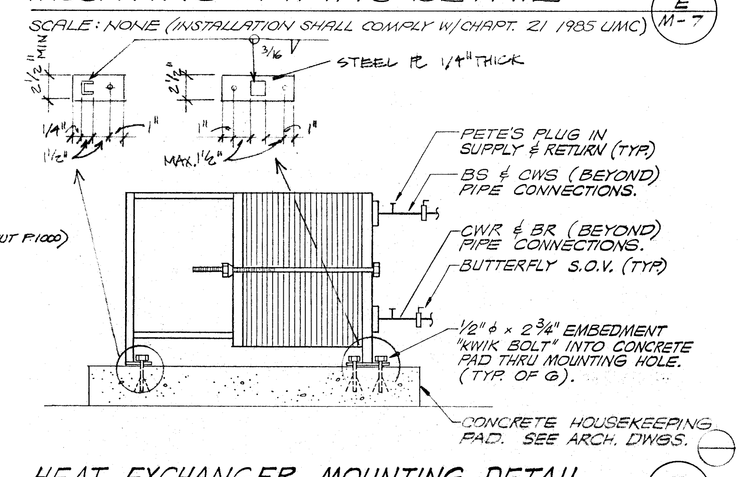

HEAT EXCHANGER MOUNTING DETAIL

SCALE: NONE — F / M-7

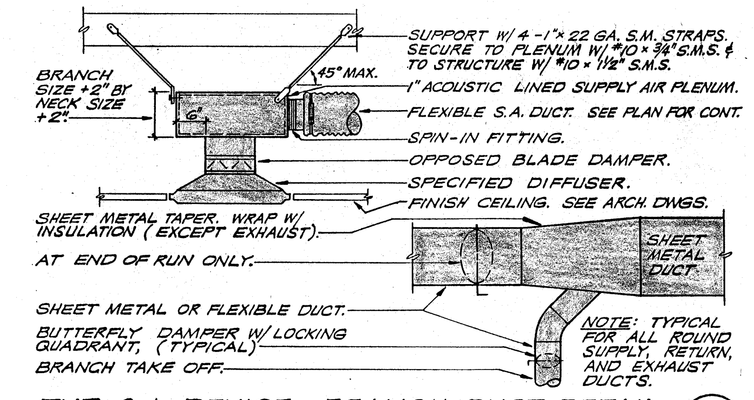

TYP. S.A. DEVICE - BRANCH DUCT DETAIL

SCALE: NONE — A / M-7

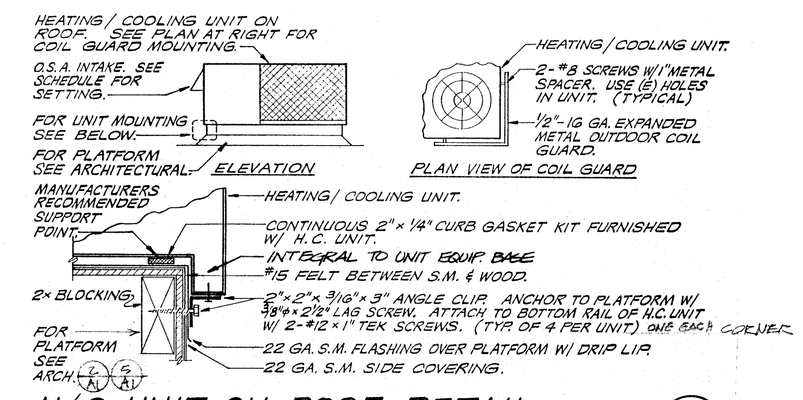

H/C UNIT ON ROOF DETAIL

SCALE: NONE — B / M-7

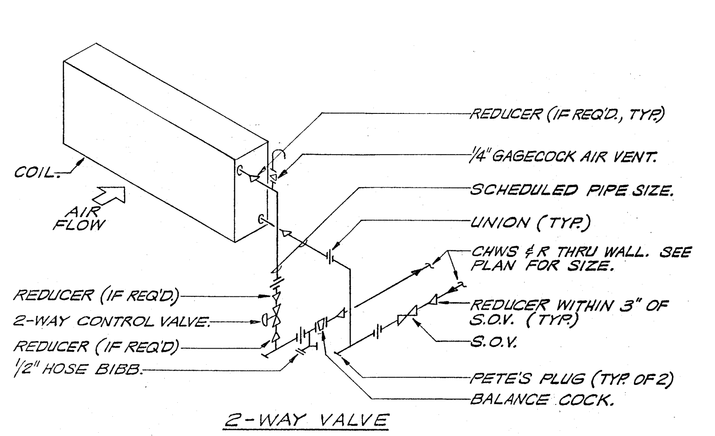

2-WAY VALVE

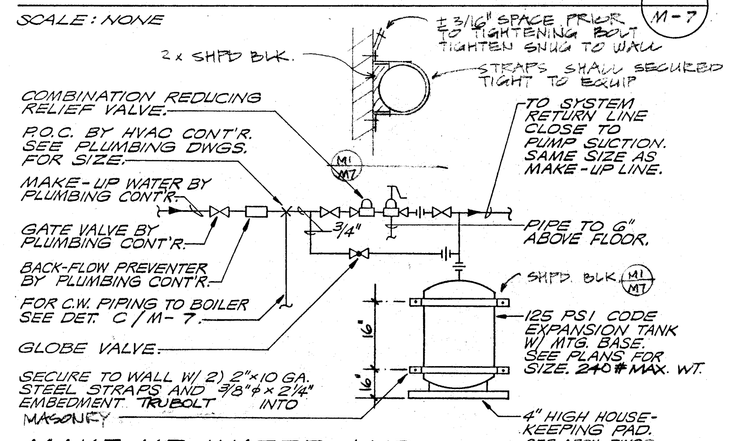

MAKE-UP WATER AND EXPANSION TANK PIPING

SCALE: NONE — M / M-7

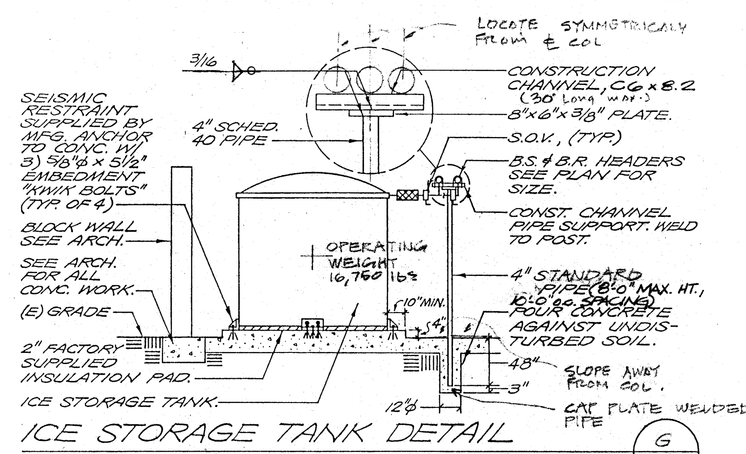

ICE STORAGE TANK DETAIL

SCALE: NONE — G / M-7

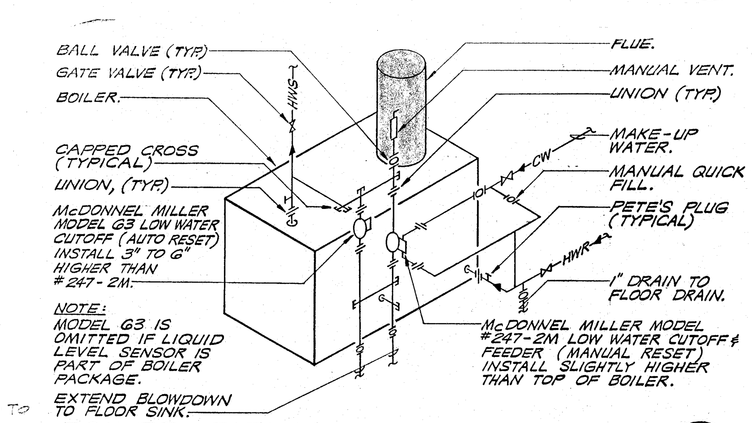

BOILER PIPING DETAIL

SCALE: NONE — C / M-7

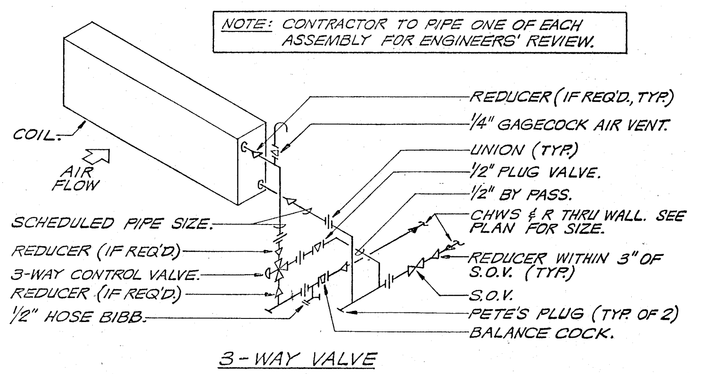

3-WAY VALVE

UNIT VENTILATOR PIPING DETAIL

SCALE: NONE — R / M-7

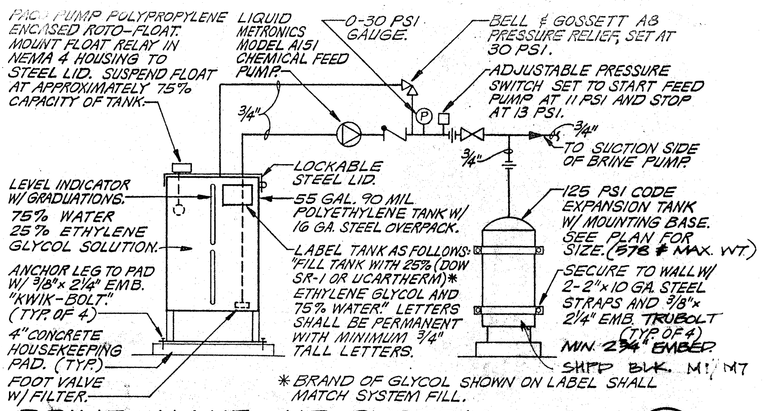

BRINE MAKE-UP SYSTEM

SCALE: NONE — N / M-7

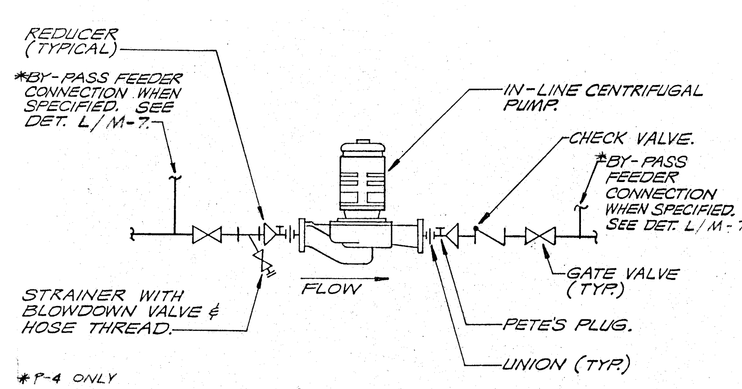

IN-LINE PUMP PIPING DETAIL

SCALE: NONE — H / M-7

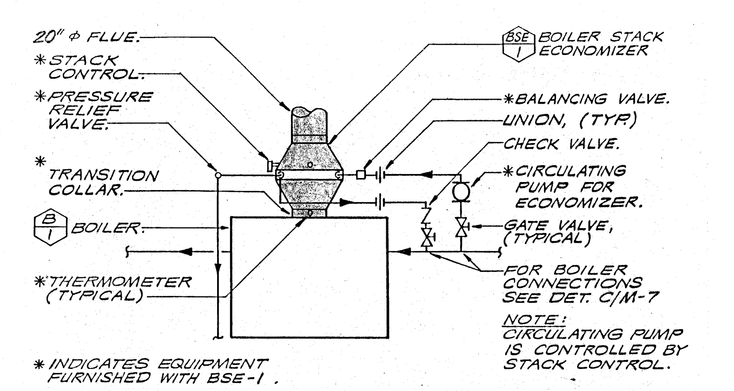

BOILER STACK ECONOMIZER

SCALE: NONE — D / M-7

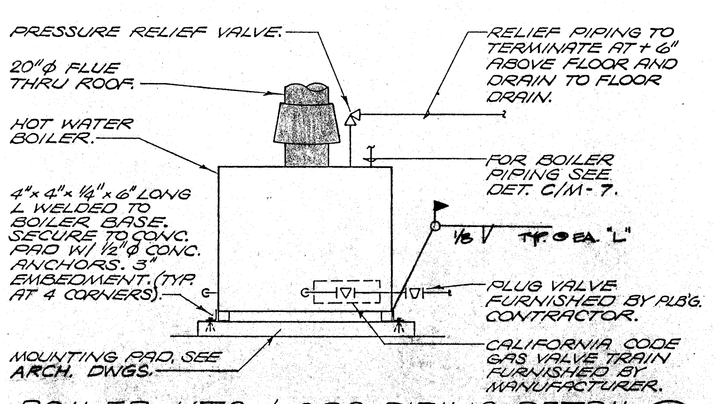

BOILER MTG. & GAS PIPING DETAIL

SCALE: NONE (INSTALLATION SHALL COMPLY W/ CHAPT. 24 1988 UMC) — S / M-7

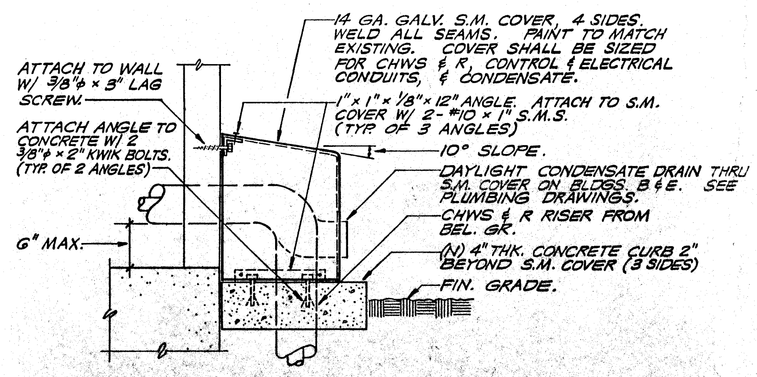

PIPE COVER DETAIL

SCALE: NONE — P / M-7

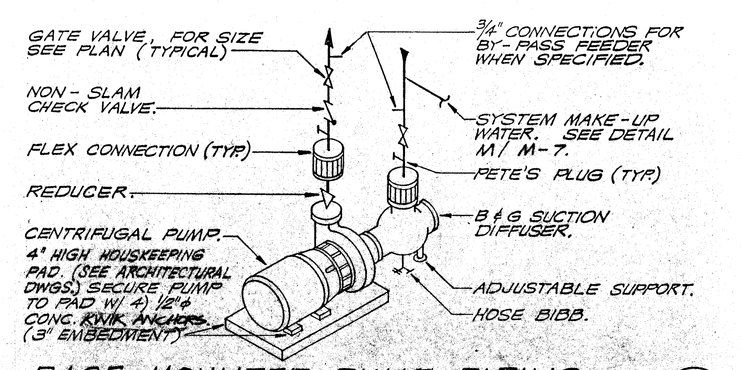

BASE MOUNTED PUMP PIPING

SCALE: NONE — J / M-7

TITLE 24 & 1988 UBC
Department of Consumer Affairs
Office of Administrative Law
DEC 7 1990
Structural Safety Section
A 53548
JCH/LA

APPROVED FOR CONSTRUCTION
DEC 7 1990
STATE ARCHITECT
BY: [illegible]

KLASSEN CORPORATION
Architecture
Planning
Construction
2021 Westwind Drive
Bakersfield, CA 93301
(805) 327-0875
C-8,510 C-10,491

The above drawings and specifications and ideas, designs and arrangements represented thereby are and shall remain the property of the architect and no part thereof shall be copied, disclosed to others or used in connection with any work or project other than the specific project for which they have been prepared and developed without the written consent of the architect. Visual contact with these drawings or specifications shall constitute conclusive evidence of acceptance of these restrictions.

Written dimensions on these drawings shall have precedence over scaled dimension. contractors shall verify and be responsible for all dimensions and conditions on the job and this office must be notified of any variations from the dimensions and conditions shown by these drawings. Shop details must be submitted to this office for approval before proceeding with fabrication.

BAKERSFIELD CITY SCHOOL DISTRICT
WAYSIDE ELEMENTARY SCHOOL MODERNIZATION
BAKERSFIELD, CALIFORNIA

WAYSIDE ELEMENTARY SCHOOL
BAKERSFIELD CITY SCHOOL DISTRICT
1000 WING AVENUE

Sheet title: DETAILS

Lawrence • Nye • Becker Associates
CONSULTING MECHANICAL ENGINEERS, INCORPORATED
1330 W. Shaw Avenue, Suite 101 Fresno, CA 93711
(209) 225-6101 FAX (209) 224-6321

AO # 11064

Date:	Issued for:
12/22/89	OLA/OSA APPROVAL
10/31/90	OSA. BACKCHECK

Date:	Revisions:

Drawn by: D. ENNIS
Checked by: G. NYE
Job no: 1702
Sheet: M-7
Sheet of:
Date:

OLA APPLICATION NO. 72-56812