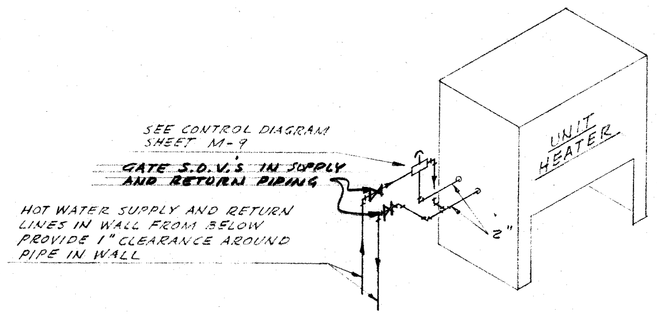

ISOMETRIC SHOWING PIPE CONNECTIONS @ UNIT HEATER

NO SCALE

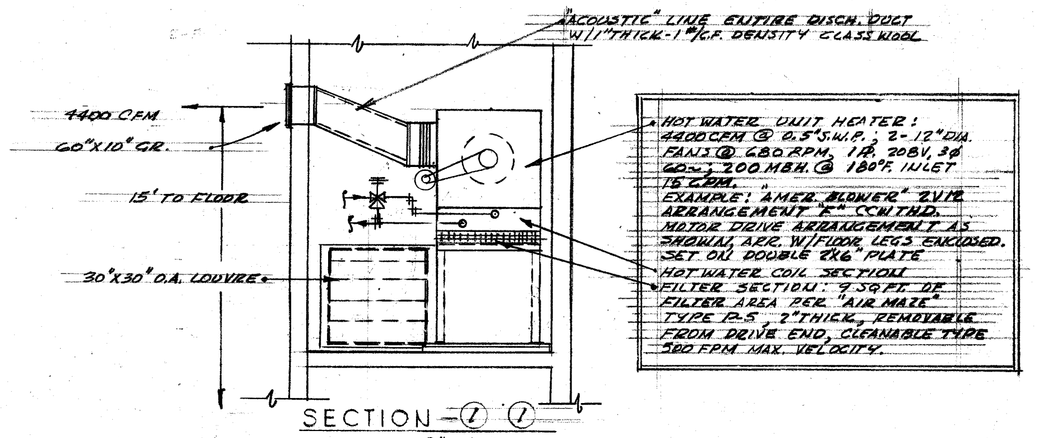

SECTION 1 1

SCALE 3/8" = 1'-0"

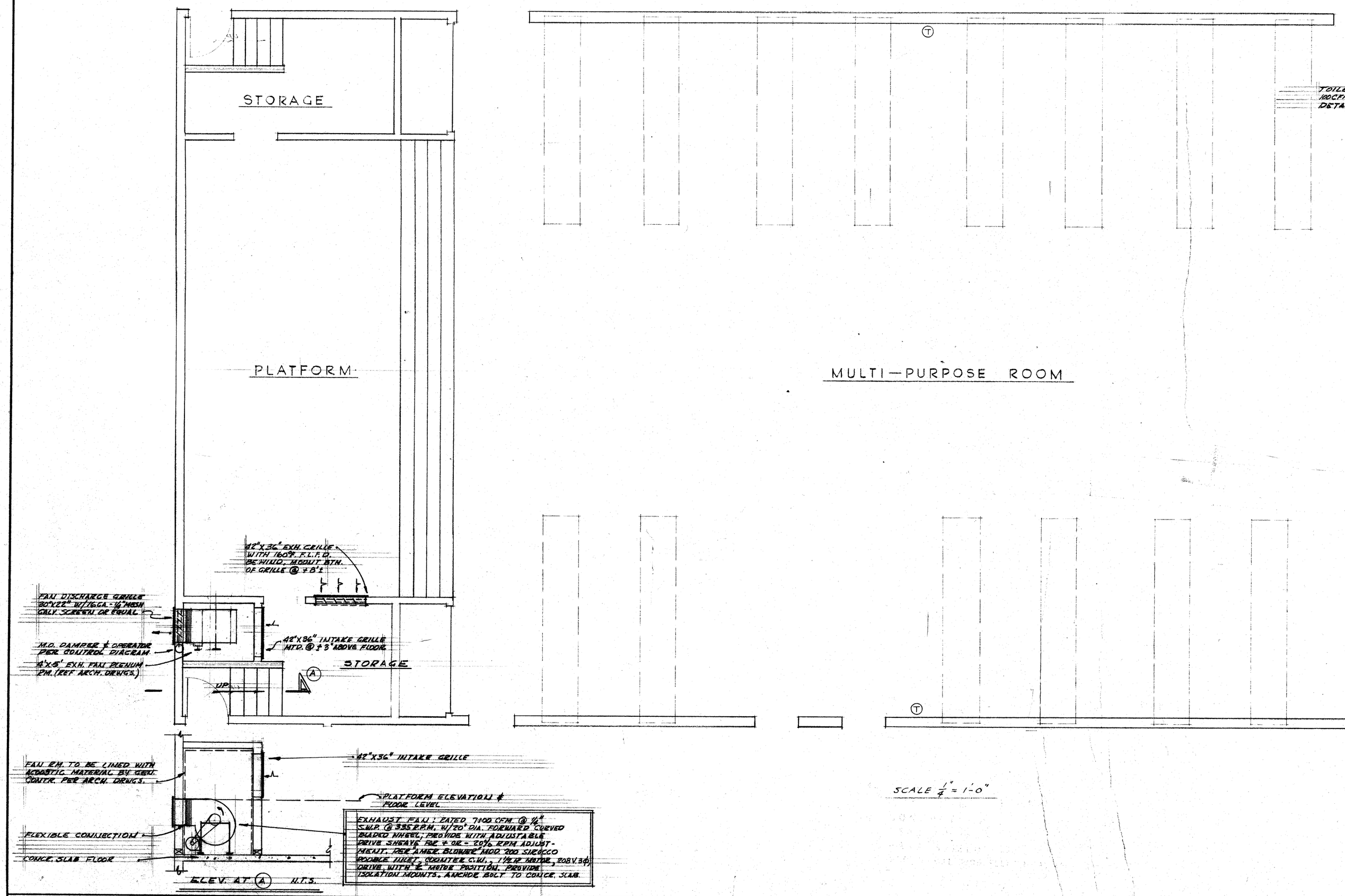

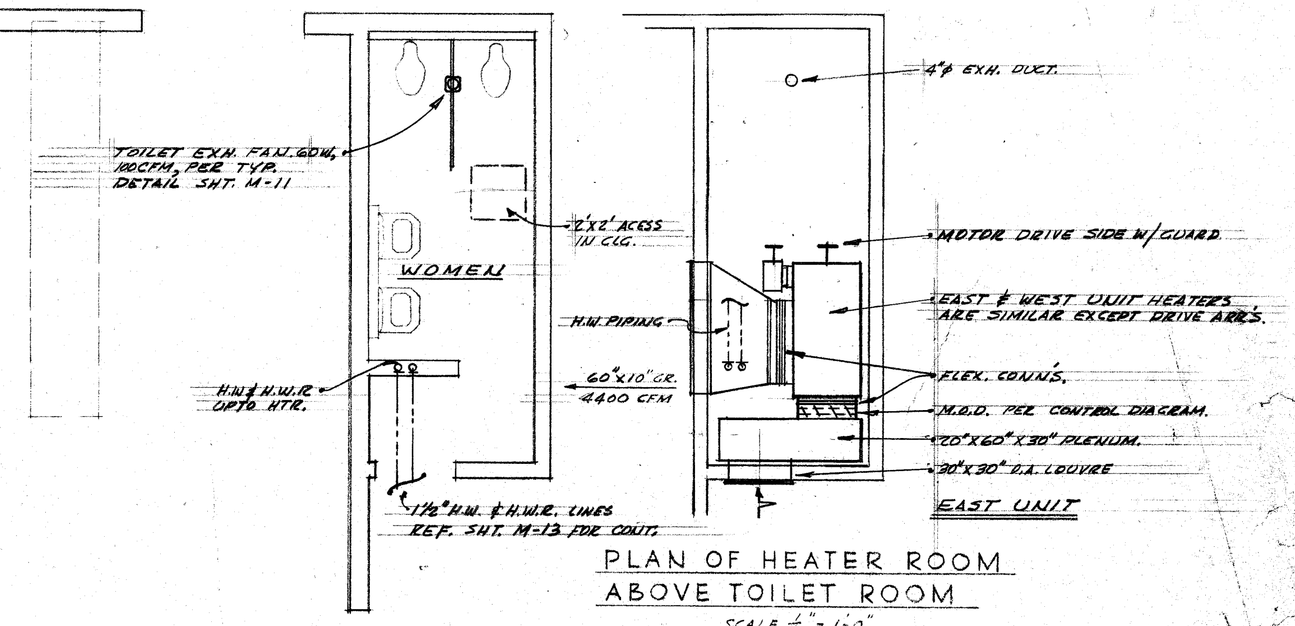

PLAN OF HEATER ROOM ABOVE TOILET ROOM

SCALE 1/4" = 1'-0"

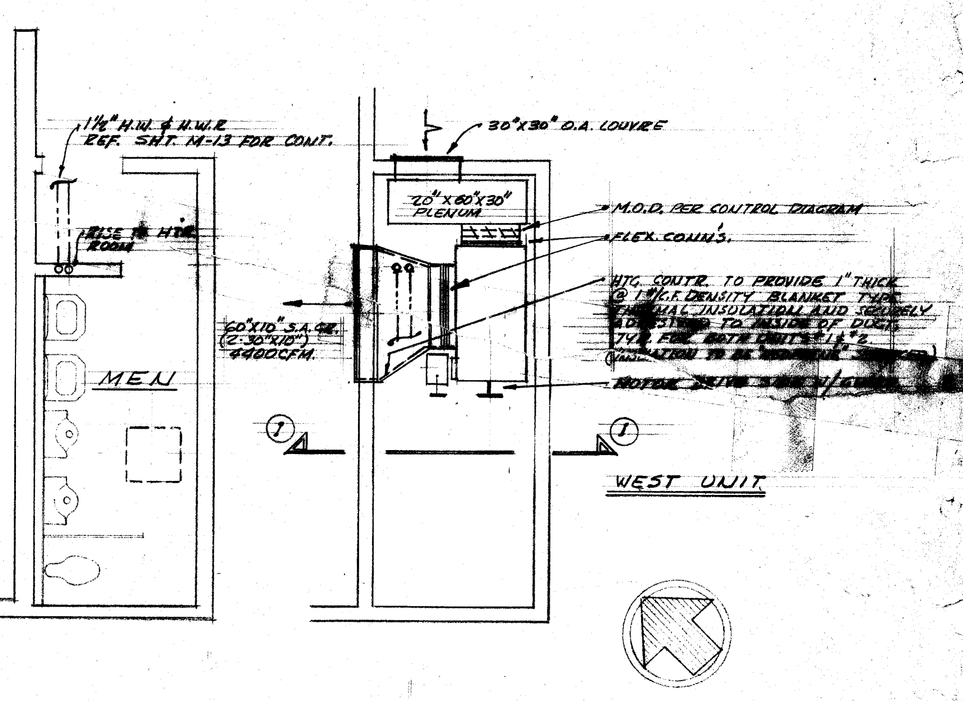

PLAN OF HEATER ROOM ABOVE TOILET ROOM

SCALE 1/4" = 1'-0"

DIVISION OF ARCHITECTURE

STATE OF CALIFORNIA—DEPARTMENT OF PUBLIC WORKS
DIVISION OF ARCHITECTURE

18096 APPROVED DEC 22 1958

APPLICATION No. Per M.W. Schlberg
PRINCIPAL STRUCTURAL ENGINEER

BOARD OF EDUCATION

PRES.

SEC.

Helen R. Compton
11/24/58

HEATING & VENTILATING
FLOOR PLAN-MULTI-PURPOSE ROOM
UNIT ONE

BAKERSFIELD CALIFORNIA

Whitney Biggar

WHITNEY BIGGAR ARCHITECT
MEMBER AMERICAN INSTITUTE OF ARCHITECTS
3601 STOCKDALE HIGHWAY
BAKERSFIELD, CALIFORNIA
29285 REGISTRATION C-1128

PROJECT No.	8/58
DRAWN BY:	
CHECKED BY	JR
DATE	11/24/58
SHEET	M-8
OF	53