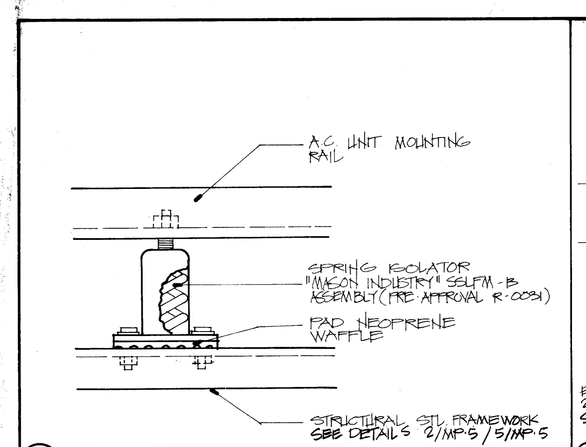

1 SPRING DETAIL N.S.

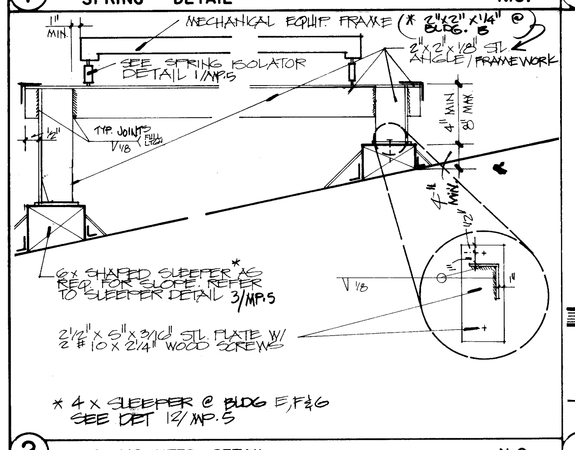

2 A/C MOUNTED DETAIL N.S.

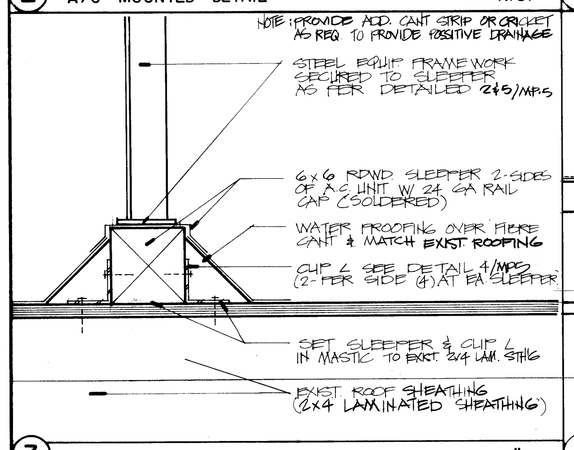

3 SLEEPER DETAIL BLDG A,B,C,& D 3"

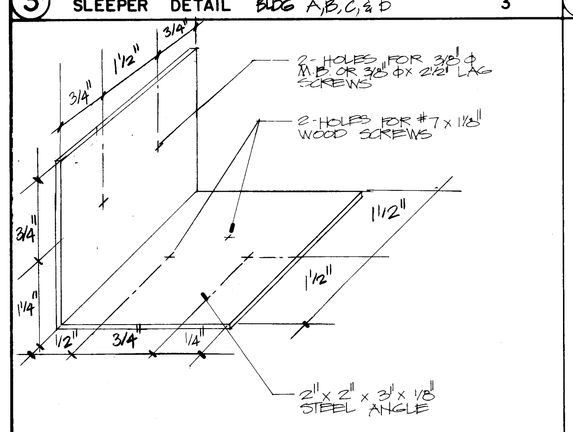

4 CLIP ANGLE DETAILS 3"

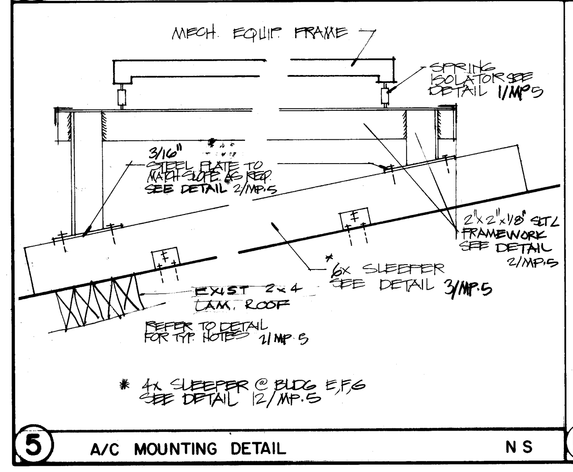

5 A/C MOUNTING DETAIL N S

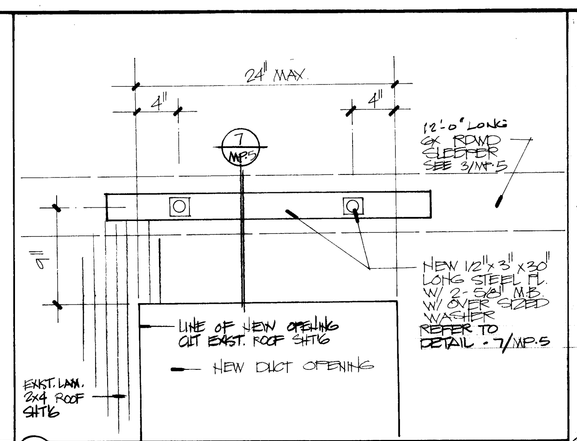

6 STL. PLATE AT SLEEPER 1-1/2"

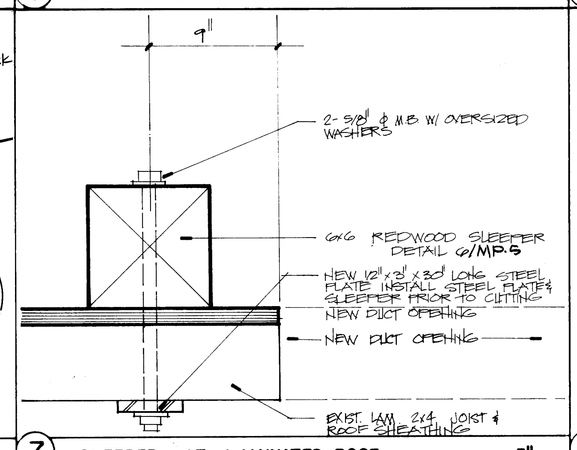

7 SLEEPER AT LAMINATED ROOF 3"

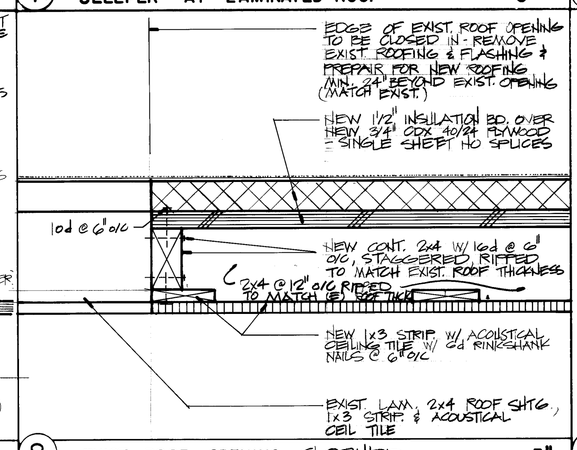

8 EXIST. ROOF OPENING CLOSURE 3"

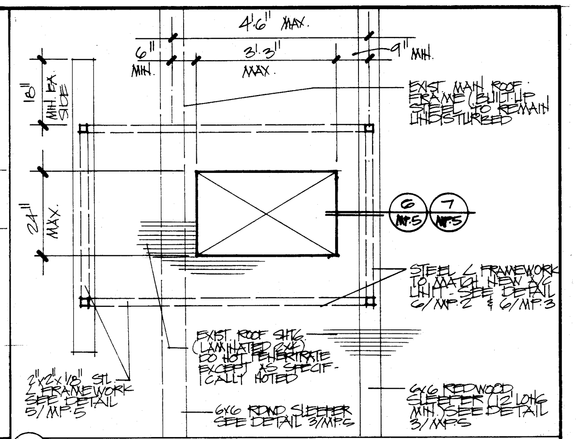

11 NEW ROOF OPENING SLEEPERS 1/2"

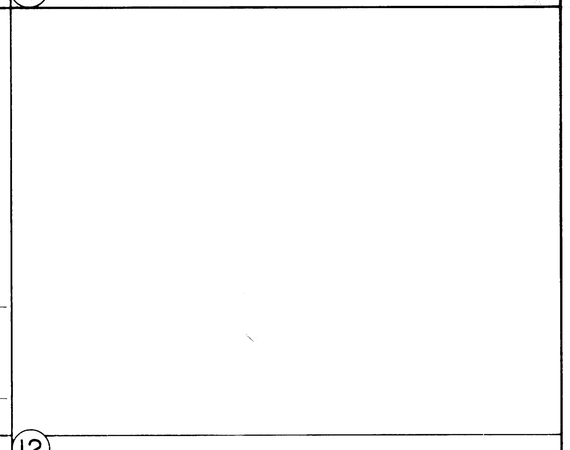

12

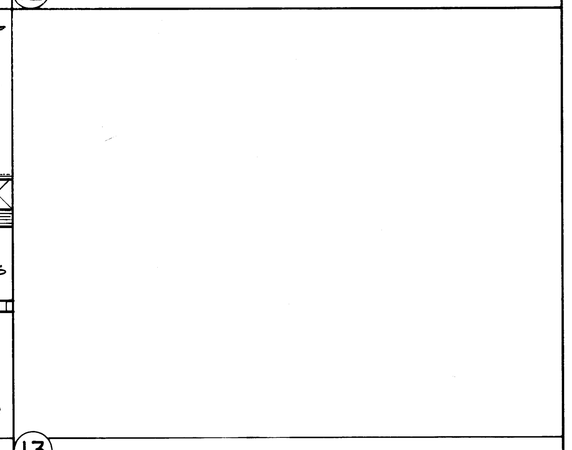

13

14

15

NOTE: 1. VERIFY ALL CONDITIONS AND DIMENSIONS AT THE SITE AND AS SHOWN ON THE DRAWINGS. REPORT ANY DISCREPANCIES TO THE ARCHITECT BEFORE PROCEEDING WITH ANY WORK.

GENERAL NOTES

1. THE FOLLOWING NOTES, TYPICAL DETAILS AND SCHEDULES SHALL APPLY TO ALL PHASES OF THIS PROJECT UNLESS OTHERWISE SHOWN OR NOTED.

2. SPECIFIC NOTES AND DETAILS SHALL TAKE PRECEDENCE OVER GENERAL NOTES AND TYPICAL DETAILS.

3. ALL MATERIALS AND WORKMANSHIP SHALL CONFORM TO THE MINIMUM STANDARDS OF THE 1988 CALIFORNIA ~~CODE~~ TITLE 24, BUILDING STANDARDS, PART 2 (C.A.C.) AND THE ~~CODE~~ EDITION OF THE UNIFORM BUILDING CODE (U.B.C.) AND SUCH OTHER REGULATING AGENCIES EXERCISING AUTHORITY OVER ANY PORTION OF THE WORK. THE CONTRACTOR SHALL HAVE A COPY OF THE U.B.C. ON THE JOB SITE. ~~& CODE OF REG.~~ & TITLE 24

4. THE CONTRACTOR SHALL EXAMINE THE DRAWINGS AND SPECIFICATIONS (CONTRACT DOCUMENTS), AND SHALL NOTIFY THE ARCHITECT OR ENGINEER OF ANY DISCREPANCIES HE MAY FIND BEFORE PROCEEDING WITH THE WORK.

5. ALL INFORMATION ON EXISTING CONDITIONS SHOWN ON DRAWINGS ARE BASED ON BEST PRESENT KNOWLEDGE AVAILABLE, BUT WITHOUT GUARANTEE OF ACCURACY. THE CONTRACTOR SHALL VERIFY AND BE RESPONSIBLE FOR ALL DIMENSIONS AND CONDITIONS AT THE SITE AND SHALL NOTIFY THE ARCHITECT OR ENGINEER OF ANY DISCREPANCIES BETWEEN ACTUAL SITE CONDITIONS AND INFORMATION SHOWN ON DRAWINGS OR IN THE SPECIFICATIONS (CONTRACT DOCUMENTS) BEFORE PROCEEDING WITH WORK.

6. THE CONTRACTOR SHALL IMMEDIATELY NOTIFY THE ARCHITECT OR ENGINEER OF ANY CONDITION WHICH IN HIS OPINION MIGHT ENDANGER THE STABILITY OF THE STRUCTURE OR CAUSE DISTRESS OF THE STRUCTURE.

7. ALL WORK SHALL CONFORM TO THE BEST PRACTICE PREVAILING IN THE VARIOUS TRADES COMPRISING WORK. THE CONTRACTOR SHALL BE RESPONSIBLE FOR COORDINATING THE WORK OF ALL TRADES.

8. THESE NOTES, DETAILS, DRAWINGS AND SPECIFICATIONS (CONTRACT DOCUMENTS) REPRESENT THE FINISHED STRUCTURE, AND DO NOT INDICATE THE METHOD OF CONSTRUCTION. THE CONTRACTOR SHALL SUPERVISE AND DIRECT THE WORK AND SHALL BE SOLELY RESPONSIBLE FOR CONSTRUCTION MEANS, METHODS, TECHNIQUES, SEQUENCES AND PROCEDURES.

9. THE CONTRACTOR SHALL REFER TO THE SPECIFICATIONS FOR INFORMATION NOT COVERED BY THESE DRAWINGS AND GENERAL NOTES.

10. THE CONTRACTOR SHALL PROVIDE TEMPORARY BRACING AND SHORING FOR ALL STRUCTURAL MEMBERS AS REQUIRED FOR CONSTRUCTION STABILITY OF THE STRUCTURE DURING ALL PHASES OF CONSTRUCTION.

11. THE CONTRACTOR SHALL TAKE ALL STEPS NECESSARY TO ENSURE PROPER ALIGNMENT OF THE STRUCTURE AFTER THE INSTALLATION OF ALL STRUCTURAL AND FINISH MATERIALS. THIS SHALL INCLUDE ANY NECESSARY PRELOADING OF THE STRUCTURE TO DETERMINE FINAL POSITION OF THE COMPLETED WORK.

12. OBSERVATION VISITS TO THE PROJECT SITE BY FIELD REPRESENTATIVES OF ARCHITECT OR ENGINEERING (SUPPORT SERVICES) SHALL NOT INCLUDE INSPECTIONS OF SAFETY OR PROTECTIVE MEASURES, NOR CONSTRUCTION PROCEDURES, TECHNIQUES OR SEQUENCES. SUPPORT SERVICES SHALL BE CONDUCTED ON A PART-TIME BASIS. ANY PHASE OF CONSTRUCTION SHALL BE DISTINGUISHED FROM CONTINUOUS AND DETAILED INSPECTION SERVICES (AS REQUIRED BY ANY REGULATING GOVERNMENTAL AGENCY, I.E. LOCAL BUILDING DEPARTMENT) PROVIDED BY OTHERS. THESE SUPPORT SERVICES, WHETHER OF MATERIALS OR WORK, ARE PERFORMED SOLELY FOR THE PURPOSE OF ASSISTING IN QUALITY CONTROL AND IN ACHIEVING CONFORMANCE WITH CONTRACT DOCUMENTS, BUT DO NOT GUARANTEE CONTRACTOR'S PERFORMANCE AND SHALL NOT BE CONSTRUED AS SUPERVISION OF CONSTRUCTION.

13. PROVIDE OPENINGS AND SUPPORTS AS REQUIRED PER TYPICAL DETAILS AND NOTES FOR MECHANICAL AND ELECTRICAL EQUIPMENT, VENTS, DUCTS, PIPING, ETC. ALL MECHANICAL AND ELECTRICAL EQUIPMENT SHALL BE PROPERLY "SWAY BRACED" AGAINST LATERAL FORCES, SEE SEISMIC RESTRAINT AND ANCHORAGE NOTES, THIS SHEET.

14. THESE NOTES, DETAILS, DRAWINGS AND SPECIFICATIONS (CONTRACT DOCUMENTS) DO NOT CARRY NECESSARY PROVISIONS FOR CONSTRUCTION SAFETY. THESE DOCUMENTS AND ALL PHASES OF CONSTRUCTION HEREBY CONTEMPLATED ARE TO BE GOVERNED, AT ALL TIMES, BY APPLICABLE PROVISIONS OF THE CURRENT CALIFORNIA OCCUPATIONAL SAFETY AND HEALTH ACT.

15. WHERE ANY CONFLICT OCCURS BETWEEN THE REQUIREMENTS OF FEDERAL, STATE AND LOCAL LAWS, CODES, ORDINANCES, RULES AND REGULATIONS, THE MOST STRINGENT WILL GOVERN.

16. REFER TO ARCHITECTURAL DRAWINGS TO COORDINATE WITH STRUCTURAL DRAWINGS, AND ANY DISCREPANCY BETWEEN THESE DRAWINGS SHALL BE REFERRED TO THE ARCHITECT OR ENGINEER FOR CLARIFICATION BEFORE START OF CONSTRUCTION.

17. WRITTEN DIMENSIONS SHALL HAVE PRECEDENCE OVER SCALED DIMENSIONS.

18. DRAWINGS (NOTES, SCHEDULES, DETAILS AND PLANS) SHALL HAVE PRECEDENCE OVER STRUCTURAL SPECIFICATIONS.

19. IN THE EVENT THAT CERTAIN FEATURES OF THE CONSTRUCTION ARE NOT FULLY SHOWN ON THE DRAWINGS OR CALLED FOR IN THE GENERAL NOTES OR SPECIFICATIONS, THEN THEIR CONSTRUCTION SHALL BE OF THE SAME CHARACTER AS FOR SIMILAR CONDITIONS THAT ARE SHOWN OR CALLED FOR.

20. CONTRACTOR SHALL HAVE A COPY OF PROJECT SOILS OR FOUNDATION INVESTIGATION ON THE JOB SITE.

21. ASTM DESIGNATION AND ALL STANDARDS REFER TO THE LATEST AMENDMENTS.

22. MODIFICATIONS OF THESE NOTES, DETAILS, PLANS AND SPECIFICATIONS SHALL NOT BE MODIFIED WITHOUT PRIOR WRITTEN APPROVAL OF THE ARCHITECT OR ENGINEER.

23. ONLY "APPROVED" STRUCTURAL DRAWING DRAWINGS ARE PERMITTED TO BE USED FOR CONSTRUCTION ON THIS PROJECT. ALL OTHER DRAWINGS ARE OBSOLETE AND ARE NOT PERMITTED ON THE JOB SITE, SHALL THEY BE USED FOR ANY CONSTRUCTION PURPOSES. CONTRACTORS USING UNAPPROVED DRAWINGS ARE SOLELY RESPONSIBLE FOR ALL WORK NOT PERFORMED IN ACCORDANCE WITH THE "APPROVED" DRAWINGS.

STRUCTURAL STEEL AND WELDING

1. ALL STRUCTURAL STEEL SHALL CONFORM TO A.S.T.M. A-36 AND U.B.C. STANDARD NO. 27-1.

2. ALL STRUCTURAL STEEL SHALL BE FABRICATED AND ERECTED IN ACCORDANCE WITH A.I.S.C. SPECIFICATIONS AND CODE OF STANDARD PRACTICE AS AMENDED TO DATE.

3. ALL WELDING SHALL BE DONE BY QUALIFIED AND CERTIFIED WELDERS.

4. NO FIELD WELDING PERMITTED, UNLESS SPECIFICALLY NOTED OTHERWISE.

5. SHOP DRAWINGS FOR THE FABRICATION OF ANY STRUCTURAL STEEL SHALL BE APPROVED BY CONTRACTOR AND SUBMITTED TO ARCHITECT OR ENGINEER FOR HIS REVIEW, PRIOR TO FABRICATION.

6. NO HOLES OTHER THAN THOSE SPECIFICALLY DETAILED SHALL BE ALLOWED THROUGH STRUCTURAL STEEL MEMBERS. BORING OF HOLES IS NOT PERMITTED.

7. ALL STRUCTURAL STEEL SHALL BE PAINTED ONE SHOP COAT AND FIELD TOUCHED-UP WITH RED LEAD (OR APPROVED ZINC CHROMATE PRIMER) AS NECESSARY.

8. ALL BOLTS SHALL CONFORM TO A.S.T.M., A-307-68. (U.O.N.)

9. ALL WELDING SHALL CONFORM TO 'AWS' SPECIFICATION FOR WELDING. (E-70XX ELECTRODES).

10. WHERE FILLET WELD SIZE IS NOT INDICATED, USE 'AWS' MINIMUM SIZE BASED ON THE THICKNESS OF THE THICKER PART BEING WELDED, AS SPECIFIED IN A.I.S.C. MANUAL OF STEEL CONSTRUCTION, EIGHTH EDITION SECTION 1.17.2.

11. WELDER QUALIFICATION REQUIREMENTS, WELDING PROCEDURE AND WELDING ELECTRODES FOR ALL STRUCTURAL STEEL (EXCEPT STRUCTURAL SHEET STEEL, SEE STEEL DECKING) SHALL CONFORM TO U.B.C. STANDARD NO. 27-6.

12. FABRICATION, ERECTION AND WELDING OF STRUCTURAL STEEL SHALL CONFORM TO U.B.C. STANDARD NO. 27-2.

LUMBER/TIMBER

1. LUMBER GRADES: DOUGLAS FIR-LARCH

2x STUDS, BLOCKING & PLATES:
BEARING WALLS----------#2 OR BETTER
NON-BEARING WALLS----------CONSTRUCTION OR BETTER

2x JOISTS----------#2 OR BETTER
4x BEAMS----------#1 OR BETTER
6x BEAMS: EXPOSED (INT/EXT)----------SELECT STRUCTURAL OR BETTER
NON-EXPOSED----------#1 OR BETTER

2. FOUNDATION SILL PLATES SHALL BE CALIFORNIA REDWOOD (CLOSE GRAIN) OR PRESSURE TREATED DOUGLAS FIR. SEE SHEAR WALL SCHEDULES AND FOUNDATION PLAN FOR ANCHOR BOLT SIZE AND SPACING. SEE CARPENTRY/FRAMING NOTE #6.

3. PLYWOOD SHALL BE C.D.X. STRUCTURAL II (OR BETTER) WITH EXTERIOR GLUE, AS GRADED BY A.P.A. PLYWOOD SHALL CONFORM TO U.B.C. STANDARD NO. 25-9 AND UNITED STATES PRODUCT STANDARD PS1-~~83~~ 95

4. LUMBER SHALL CONFORM TO U.B.C. STANDARD NO. 25-1.

5. MAXIMUM MOISTURE CONTENT FOR ALL STRUCTURAL MEMBERS SHALL NOT EXCEED 19% (UNLESS SPECIFICALLY NOTED OTHERWISE).

FASTENERS

1. NAILING FOR FRAMING BE WITH 'COMMON' NAILS (U.O.N.).

2. LAGSCREWS SHALL BE SCREWED INTO PREDRILLED HOLES THE SAME DIAMETER AS ROOT OF THREAD, AND ENLARGED TO SHANK DIAMETER FOR LENGTH OF SHANK.

Machine Applied Nailing:
Use of machine nailing is subject to a satisfactory jobsite demonstration for each project and the approval by the project Architect or Structural Engineer and the Office of the State Architect. The approval is subject to continued satisfactory performance. Machine nailing will not be approved in 5/16" plywood. If nailheads penetrate the outer ply more than would be normal for a hand hammer or if minimum allowable edge distances are not maintained, the performance will be deemed unsatisfactory.

3. BOLTS SHALL HAVE STANDARD CAST IRON MALLEABLE IRON WASHERS (UNLESS USED WITH METAL SIDE PLATES OR ANGLES).

4. BOLT HOLES THRU LUMBER SHALL BE DRILLED 1/16" LARGER THAN BOLT DIAMETER.

5. ALL BOLTS SHALL CONFORM TO A.S.T.M. 307-68.

6. WASHERS AT EACH BOLT HEAD AND NUT, AT LOCATIONS WITH NO METAL SIDE PLATES.

7. BOLT TIGHTENING: TAKE UP SNUG AND RETIGHTEN AT THE LATEST PRACTICABLE TIME DURING CONSTRUCTION.

8. NAILS SHALL NOT BE DRIVEN CLOSER THAN 1/2 OF THEIR LENGTH, NOT CLOSER TO THE EDGE OF THE MEMBER THAN 1/4 LENGTH, EXCEPT FOR SHEATHING.

9. SUB-BORE WHEN NAILS TEND TO SPLIT WOOD. SUB-BORE FOR 20d AND LARGER NAILS. DRILL DIAMETER SHALL BE 0.75 TIMES NAIL DIAMETER.

CARPENTRY/FRAMING
CSR

1. SEE C.A.C. TABLE ~~2-25-P~~ FOR MINIMUM NAILING REQUIREMENTS.

2. METAL FRAMING ANGLES, ANCHORS, CLIPS, STRAPS, TIES, HOLDOWNS, ETC. SHALL BE MANUFACTURED BY 'SIMPSON STRONG-TIE CO' OR AN APPROVED EQUAL.

3. PLYWOOD USED IN ROOFS, FLOORS AND DECKS, SHALL BE PLACED WITH FACE GRAIN PERPENDICULAR TO SUPPORTS. PLYWOOD SHEETS SHALL BE STAGGERED.

4. FACE NAIL ALL DOUBLE (AND TRIPLE) 2x STUDS AND JOISTS TOGETHER WITH 16d AT 12" O.C., STAGGER NAILS TOP & BOTTOM.

5. IN GENERAL, PLYWOOD PANEL EDGES (FOR SHEAR WALLS, ROOFS, FLOORS AND DECKS) SHALL BEAR ON FRAMING MEMBERS (2x MINIMUM) AND BUTT ALONG THEIR CENTER LINES.

6. PLACE BEAMS WITH NATURAL CAMBER UPWARD.

7. ALL NEW STRUCTURAL MEMBERS (JOISTS, PLATES, STUDS, BEAMS, COLUMNS, ETC.) SHALL BE NOTCHED, CUT OR DRILLED (EXCEPT FOR THOSE ~~NOTED~~ REQUIRED ~~FOR PLUMBING~~) UNLESS SPECIFICALLY NOTED ~~OTHER~~ NOTED OR DETAILED OTHERWISE OR WITH WRITTEN APPROVAL FROM ARCHITECT/ENGINEER.
* (WITHIN APPROVED WORKING DRAWINGS)

8. HOLES AND NOTCHES IN JOISTS:

A. NOTCHES IN THE TOP & BOTTOM OF JOISTS SHALL NOT EXCEED ONE SIXTH THE DEPTH AND SHALL NOT BE LOCATED IN THE MIDDLE THIRD OF SPAN OR WITHIN 18" OF SUPPORTS.
B. HOLES BORED IN JOISTS SHALL NOT EXCEED ONE SIXTH OF JOIST DEPTH AND SHALL BE LOCATED WITHIN MIDDLE 2/3 OF SPAN AND WITHIN THE MIDDLE THIRD OF JOISTS DEPTH.

9. HOLES AND NOTCHES IN STUDS, PLATES AND SILLS: BORED HOLES MAY BE PLACED IN STUDS, PLATES AND SILLS PROVIDED THEY ARE ACCURATELY CENTERED ABOUT STUD, SPACED A MINIMUM OF 12" APART AND HOLE DIAMETER DOES NOT EXCEED 25% OF STUD WIDTH. STUDS MAY BE NOTCHED PROVIDED NOTCH DEPTH DOES NOT EXCEED 25% OF STUD WIDTH. WHEN BORED, HOLES SHALL NOT EXCEED 25% OF STUD WIDTH. REINFORCE PLATE, SILL OR STUD AS FOLLOWS:

A. PLATES: 1 1/2" X 1/4" PLATE ON EACH SIDE OF PLATE NAILED WITH 4 - 16d NAILS EACH SIDE OF HOLE. HOLES OVER 33% OF THE PLATE WIDTH ARE NOT PERMITTED IN ANY PLATE. ANY PIPE OR CONDUIT PROCEEDING OVER HOLE LARGER THAN 33% OF THE PLATE WIDTH SHALL BE BROUGHT TO THE ATTENTION OF THE ENGINEER IMMEDIATELY.
B. SILLS: SPLICE IN A MANNER SIMILAR TO PLATES ABOVE, AT HOLES BETWEEN 25% AND 33% OF SILL WIDTH. SILLS MAY BE COMPLETELY COVERED EACH SIDE OF A NEW OR EXISTING CONDUIT PROVIDED AN ADDITIONAL ANCHOR BOLT OR 4 - 16d IS PLACED WITHIN 12" OF THE END OF THE SILL, EACH SIDE OF THE PIPE OR CONDUIT.
C. BORED STUDS: WORK ON EACH SIDE OF STUD WITH BLOCK OF SOME MATERIAL AND DIMENSION AS STUD: EXTEND 2 STUD WIDTHS EACH SIDE OF HOLE AND PROVIDE 3 - 16d NAILS TO STUD EACH SIDE OF HOLE. BORED HOLES GREATER THAN 33%, BUT LESS THAN 50% OF THE WIDTH OF THE STUD ARE PERMITTED, WHERE EACH STUD IS DOUBLED AND NOT MORE THAN TWO SUCCESSIVE DOUBLE STUDS ARE SO BORED AND EACH BORED STUD IS REINFORCED AS ABOVE.

SEISMIC RESTRAINT AND ANCHORAGE NOTES:

1. ALL EQUIPMENT (SEE C.A.C. TABLE 2-2312, PART A & B) SHALL BE SEISMICALLY RESTRAINED AND ANCHORED. THE RESTRAINT AND ANCHORAGE SHALL CONFORM TO REQUIREMENTS WITHIN THIS SECTION, AS WELL AS NOTES AND DETAILS WITHIN PROJECT CONSTRUCTION DOCUMENTS.

2. EQUIPMENT ANCHORAGE:

IN ACCORDANCE WITH TITLE 24, 2-2312(g) AND ~~SEC.~~ NO. 2-2313, PART B DETAILS SHALL BE PROVIDED FOR THE SEISMIC ANCHORAGE OF ALL MECHANICAL AND ELECTRICAL EQUIPMENT. ANCHORAGE DETAILS SHALL BE BASED UPON APPROPRIATE DESIGN CALCULATIONS.

EXCEPTION - FOR EQUIPMENT INSTALLED AT FLOOR OR ROOF AND WEIGHING LESS THAN 500 POUNDS, DETAILS OF THE SEISMIC ANCHORAGE MAY BE OMITTED FROM THE PLANS PROVIDED THE FOLLOWING GENERAL NOTE IS INCLUDED ON THE MECHANICAL AND ELECTRICAL PLANS:

A. ALL MECHANICAL AND ELECTRICAL EQUIPMENT SHALL BE BRACED OR ANCHORED TO RESIST A LATERAL FORCE ACTING IN ANY DIRECTION USING THE FOLLOWING CRITERIA:
B. FIXED EQUIPMENT ONLY USE: 125% OF OPERATING WEIGHT
FIXED EQUIPMENT ONLY USE: 33% OF OPERATING WEIGHT
EMERGENCY POWER EQUIPMENT GRADE: 33% OF OPERATING WEIGHT
EMERGENCY POWER EQUIPMENT ON STRUCTURE: 50% OF OPERATING WEIGHT
C. FOR FLEXIBLY MOUNTED EQUIPMENT USE 2x THE ABOVE VALUES.
D. SIMILTANEOUS VERTICAL FORCE USE 1/3x HORIZONTAL FORCE.
WHERE ANCHORAGE DETAILS ARE NOT SHOWN ON THE DRAWINGS THE ~~PROJECT~~ INSTALLATION SHALL BE SUBJECT TO THE APPROVAL OF THE MECHANICAL ENGINEER AND THE FIELD REPRESENTATIVE OF THE ~~DIVISION OF THE~~ STATE ARCHITECT.

3. SEISMIC RESTRAINTS AND ANCHORAGE OF MECHANICAL SYSTEMS AND PLUMBING PIPING SYSTEMS SHALL CONFORM TO "GUIDELINES FOR SEISMIC RESTRAINTS OF MECHANICAL SYSTEMS AND PLUMBING PIPING SYSTEMS" PUBLISHED BY THE SHEET METAL INDUSTRY FUND OF LOS ANGELES, CA. AND THE PLUMBING AND PIPING INDUSTRY COUNCIL INC., LOS ANGELES, CA.

PAINTING SPECIFICATION:

A. All products listed are those of the Glidden Company first quality grade paint, McCloskey's Varnish, Chemsi Chemical Clear Sealers and are specified solely for the purpose of establishing a strict first quality grade of paint.

1) On Metal Work: (Exterior) Products:
1st Coat Rco Primer
2nd Coat 5229 Universal Primer
3rd Coat 4550 Gloss Alkyd
4th Coat 4550 Gloss Alkyd

2) On Metal Work: (Exterior)
1st Coat 5229 Universal Primer
2nd Coat 4550 Gloss Alkyd
3rd Coat 4550 Gloss Alkyd

3) Field Painting Misc. Steel & Iron: (Exterior)
(Total of One Coat) 5229 Universal Primer

4) Enamels for Walls & Ceilings: (Interior)
(Total of Three Coats)
1st Coat 5116 Primer
2nd Coat 14600 Semi-Gloss Alkyd
3rd Coat 14600 Semi-Gloss Alkyd

B. Painting of Mechanical and Electrical Equipment: All mechanical and electrical equipment, piping, and machinery (not factory finished) of any kind where exposed to view shall be painted as specified and ducts where exposed to view through register and grilles shall be painted two (2) coats of black paint of type specified for metal work. All structural framing supporting equipment shall be painted same as for all equipment where exposed to view. All ducts, plenum, chamber ventilators, fan housing, and ventilating equipment shall be painted as specified for metal work. Equipment in mechanical rooms, shall be factory finished in heavy duty coats and/or mechanical rooms, shall be painted same color but a different shade as the walls or ceilings adjacent. Piping and equipment covered up in attic space, furred ceiling and furred piping spaces will not require paint finishes.

WALL PENETRATIONS:

1) DO NOT CUT, NOTCH, OR DRILL HOLES THROUGH STRUCTURAL MEMBERS (STUDS, PLATES, SHEATHING, BLOCKING) UNLESS SPECIFICALLY NOTED OR DETAILED OTHERWISE.

2) LOCATE NEW PENETRATIONS BETWEEN EXISTING STUDS (SEE NOTE #1) UNLESS SPECIFICALLY NOTED OR DETAILED OTHERWISE.

3) NEW PENETRATIONS THROUGH EXISTING WALL SHEATHING:
A) UNSUPPORTED EDGES SHALL BE SOLIDLY BLOCKED WITH 2X BLOCKING (W/2 - 10d *DEBAILED* AT EACH END) AND 10d AT 4" O.C. THROUGH EXISTING SHEATHING INTO NEW 2X BLOCKING.
B) PENETRATION SHALL NOT EXCEED 24" IN EITHER DIRECTION UNLESS OTHERWISE NOTED OR DETAILED.

4) WHEN EXISTING PENETRATIONS IN WALL SYSTEM ARE ABANDONED, REPLACE WITH MATERIAL OF SIMILAR SIZE AND THICKNESS. PATCH AND FRAMING BY MECHANICAL CONTRACTOR.

5) USE EXISTING PENETRATIONS WHENEVER POSSIBLE. PATCH AND FLASH AS REQUIRED.

ROOF PENETRATIONS:

1) DO NOT CUT, NOTCH, OR DRILL HOLES THROUGH STRUCTURAL MEMBERS (SHEATHING, JOISTS, BEAMS, ETC.) UNLESS SPECIFICALLY NOTED OR DETAILED OTHERWISE.

2) LOCATE NEW PENETRATIONS BETWEEN EXISTING STRUCTURAL MEMBERS (SEE NOTE #1) UNLESS SPECIFICALLY NOTED OR DETAILED OTHERWISE.

3) NEW PENETRATIONS THROUGH EXISTING ROOF OR ROOF SHEATHING:
A) UNSUPPORTED EDGES SHALL BE SOLIDLY BLOCKED WITH 2X BLOCKING (W/2 - 10d *DEBAILED* AT EACH END) AND 10d AT 4" O.C. THROUGH EXISTING SHEATHING INTO NEW 2X BLOCKING.
B) PENETRATION SHALL NOT EXCEED 24" IN EITHER DIRECTION UNLESS OTHERWISE NOTED OR DETAILED.

4) WHEN EXISTING PENETRATIONS IN ROOF SYSTEM ARE ABANDONED, REPLACE WITH MATERIAL OF SIMILAR SIZE AND THICKNESS. PATCH AND FRAMING BY MECHANICAL CONTRACTOR.

5) USE EXISTING PENETRATIONS WHENEVER POSSIBLE. PATCH AND FLASH AS REQUIRED.

TITLE 24 X 1990 1988

IDENTIFICATION STAMP
Department of General Services
Office of the State Architect
APR 20 1990
Structural Safety Section
Appt. # 53218
Back-check-ed By AH/LA

APPROVED FIRE AND PANIC ONLY
APR
STATE FIRE MARSHAL

REGISTERED PROFESSIONAL ENGINEER
CHRIS J. LAMPMAN
No. 29965
4-16-90
STRUCTURAL
STATE OF CALIFORNIA
EXP. 1-30-91

LEONARD J. SCHROEDER ARCHITECT A.I.A.
221 SOUTH MONTCLAIR BAKERSFIELD CA. 93309
(805) 325-0824

COPYRIGHT © 1989 LEONARD J. SCHROEDER ARCHITECT A.I.A.

DATE	REVISIONS

LEONARD J. SCHROEDER AND ASSOCIATE · ARCHITECT · A.I.A.

VOORHIES SCHOOL
BAKERSFIELD CITY SCHOOLS

8116
7-89
MR

MP.5
5