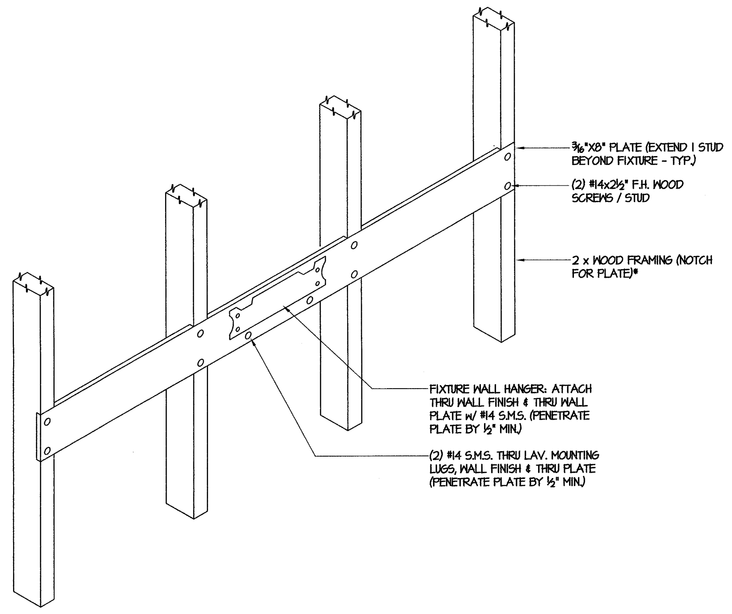

LAVATORY SUPPORT

NOT TO SCALE

(A)

* FOR METAL STUDS, WELD PLATE TO STUD (TYP.)

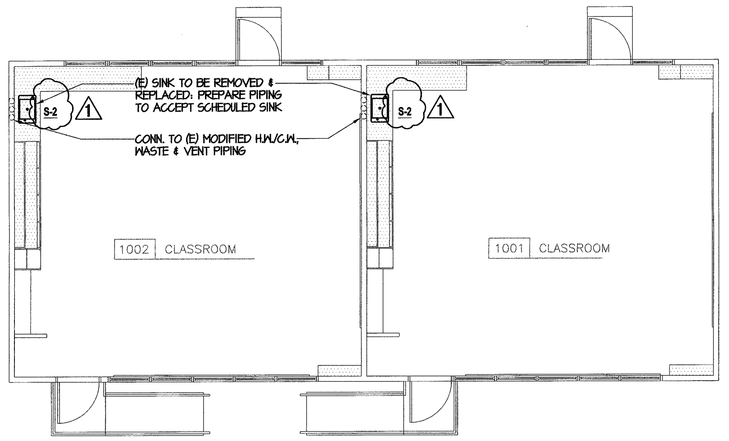

PORTABLE BLD'G. 1000

SCALE: 1/8"=1'-0"

PLUMBING LEGEND

SYMBOL	ABBR.	ITEM	SYMBOL	ABBR.	ITEM
	A.C.	AIR CONDITIONING EQUIPMENT		H.B.	HOSE BIBB
	A.D.	ACCESS DOOR/WALL BOX		H.C.	HANDICAPPED
	A.F.F.	ABOVE FINISHED FLOOR		L.	LAVATORY
	C.D.	CONDENSATE DRAIN		LOC.	LOCATION
	C.I.	CAST IRON		(N)	NEW
	C.L.G.	CEILING		N.I.C.	NOT IN CONTRACT
	C.O.	CLEANOUT		P.O.C.	POINT OF CONNECTION
	COMB.	COMBUSTION		PROV.	PROVIDE
	CONN.	CONNECTION		P.R.V.	PRESSURE REDUCING VALVE
	CONT.	CONTINUATION		R.D.	ROOF DRAIN
	COTG	CLEANOUT TO GRADE		R.W.L.	RAINWATER LEADER
	(D)C.W.	(DOMESTIC) COLD WATER		S.	SINK
	D.F.	DRINKING FOUNTAIN		S.&W.	SOIL AND WASTE
	(D)H.W.	(DOMESTIC) HOT WATER		SIM.	SIMILAR
	(D)HWR	(DOMESTIC) HOT WATER RETURN		S.O.V.	SHUT OFF VALVE
	DN.	DOWN		SS	STAINLESS STEEL
	DRN.	DRAIN		S.S.	SERVICE SINK
	(E).	EXISTING		SURF.	SURFACE
	E.D.F.	ELECTRIC DRINKING FOUNTAIN		T.&P.	TEMPERATURE AND PRESSURE RELIEF
	E.W.H.	ELECTRIC WATER HEATER		T.P.	TRAP PRIMER
	EXT'G	EXISTING		(TYP)	TYPICAL
	F.C.O.	FLOOR CLEANOUT		UR.	URINAL
	F.D.	FLOOR DRAIN		V.O.	VENT OFFSET
	FLR.	FLOOR		V.T.R.	VENT THRU ROOF
	F.S.	FLOOR SINK		W.	WASTE
	G.	GAS		W.C.	WATER CLOSET
	G.D.	GARBAGE DISPOSAL		W.H.	WATER HEATER
	GRD.	GRADE		W.C.O.	WALL CLEANOUT

ALL BRACING OF DUCTS AND PIPINGS SHALL BE INSTALLED IN ACCORDANCE WITH SMACNA GUIDELINES AS APPROVED BY DSA/ORS.

WHERE BRACING DETAILS ARE NOT SHOWN ON THE DRAWINGS OR IN THE GUIDELINES, THE FIELD INSTALLATION SHALL BE SUBJECT TO THE APPROVAL OF THE ARCHITECT, MECHANICAL ENGINEER AND DSA FIELD ENGINEER.

A COPY OF THE GUIDELINES PUBLISHED BY SMACNA AND APPROVED BY DSA SHALL BE PROVIDED BY THE CONTRACTOR AND KEPT ON THE JOB AT ALL TIMES.

ALL EQUIP. ANCHORAGE SHALL BE PER CBC 01 SEC. 1632A & TABLE 16A-0.

PLUMBING FIXTURE SCHEDULE

(1)

WC-1 Floor mounted F.V. accessible water closet, "American Standard" #2305.100 Madera, 16-1/8" rim height, "Olsonite" #10CC open-front white seat, bolt caps, "Sloan Royal" # III-1.5 flush valve, (1.6 gallons/flush) 1-1/4" C.W., 4" S. & W., 2" V.O., (see plan for trap primer accessory)

WC-2 Floor mounted F.V. elongated water closet, "American Standard" #2234.015 Madera , "Olsonite" # 10CC open-front white seat, bolt caps, "Sloan Royal" # III-1.5 flush valve, (1.6 gallons/flush) 1-1/4" C.W., 4" S. & W., 2" V.O., (see plan for trap primer accessory)

L-1 Wall hung cast iron accessible lavatory, "Commercial Enameling" # 551 (20" x 18"), "Pro-Flow" # PFH50 offset grid drain, "Chicago" metering hot/cold faucet # 3300, (2) angled wall stops with supplies, 17 ga. C.P. trap/tailpiece, (wrap H.W. and trap/tailpiece per specifications) ½" H.W./C.W., 2" W., 1½" V.O., 2" W.C.O., modification "A" for carrier lugs

L-2 Wall hung cast iron accessible lavatory, "Commercial Enameling" # 551 (20" x 18"), "Pro-Flow" # PFH50 offset grid drain, three hole punch for "Chicago" metering cold water faucet # 3400, (1) angled wall stop with supply, 17 ga. C.P. trap/tailpiece, ½" C.W., 2" W., 1½" V.O., 2" W.C.O., modification "A" for carrier lugs

S-1 Counter mounted 18 ga. stainless steel (25"x21"x6½") accessible single bowl sink, "Elkay" # LRAD2521, # LK99 strainer, "Chicago" #786 faucet with 4" wristblade handles and gooseneck spout, (2) loose key angled wall stops with supplies, 17 ga. C.P. trap/tailpiece, ½" H.W./C.W., 2" W., 1½" V.O., 2" W.C.O.,

S-2 Counter mounted stainless steel accessible classroom sink, "Kewe" # 4210 with # 5510LF gooseneck faucet and # 5054LF bubbler, integral strainer / grid drain, (2) angled wall stops with supplies, 3/8" tubing from each stop to bubbler and faucet, 17 ga. C.P. trap/tailpiece, ½" C.W., 2" W., 1½" V.O.,

S-3 Counter mounted 18 ga. stainless steel (25"x21"x6½") accessible single bowl sink, "Elkay" # LRAD2521, # LK99 strainer, single hole punch for "Chicago" #350 faucet with 4" wristblade handle and gooseneck spout, loose key angled wall stop with supply, 17 ga. C.P. trap/tailpiece, ½" C.W., 2" W., 1½" V.O., 2" W.C.O.,

DF Wall mounted dual bubbler Hi-LO accessible drinking fountain, "Kewe" # 1111.14, # 6700.4 mounting plate, S.S. construction (14 ga.) push button operation, 17 ga. C.P. trap/tailpiece, (1) angled wall stop with supply(ies) to each bubbler, 2" W., 1-1/2" V.O.,

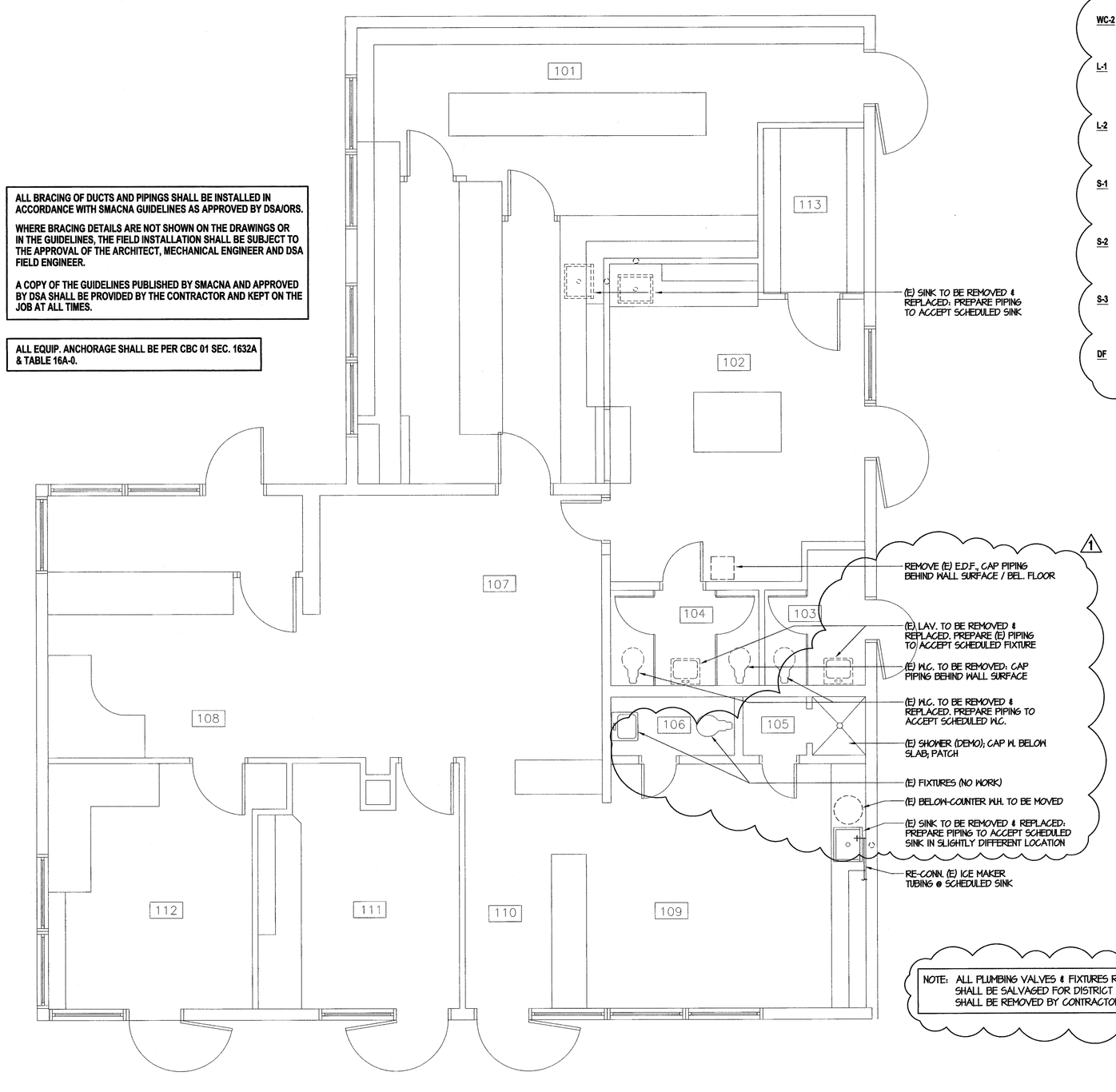

(1)

NOTE: ALL PLUMBING VALVES & FIXTURES REMOVED FROM PROJECT SHALL BE SALVAGED FOR DISTRICT REVIEW. REJECTED ITEMS SHALL BE REMOVED BY CONTRACTOR.

BUILDING 100 PLUMBING DEMO FLOOR PLAN

SCALE: 1/4"=1'-0"

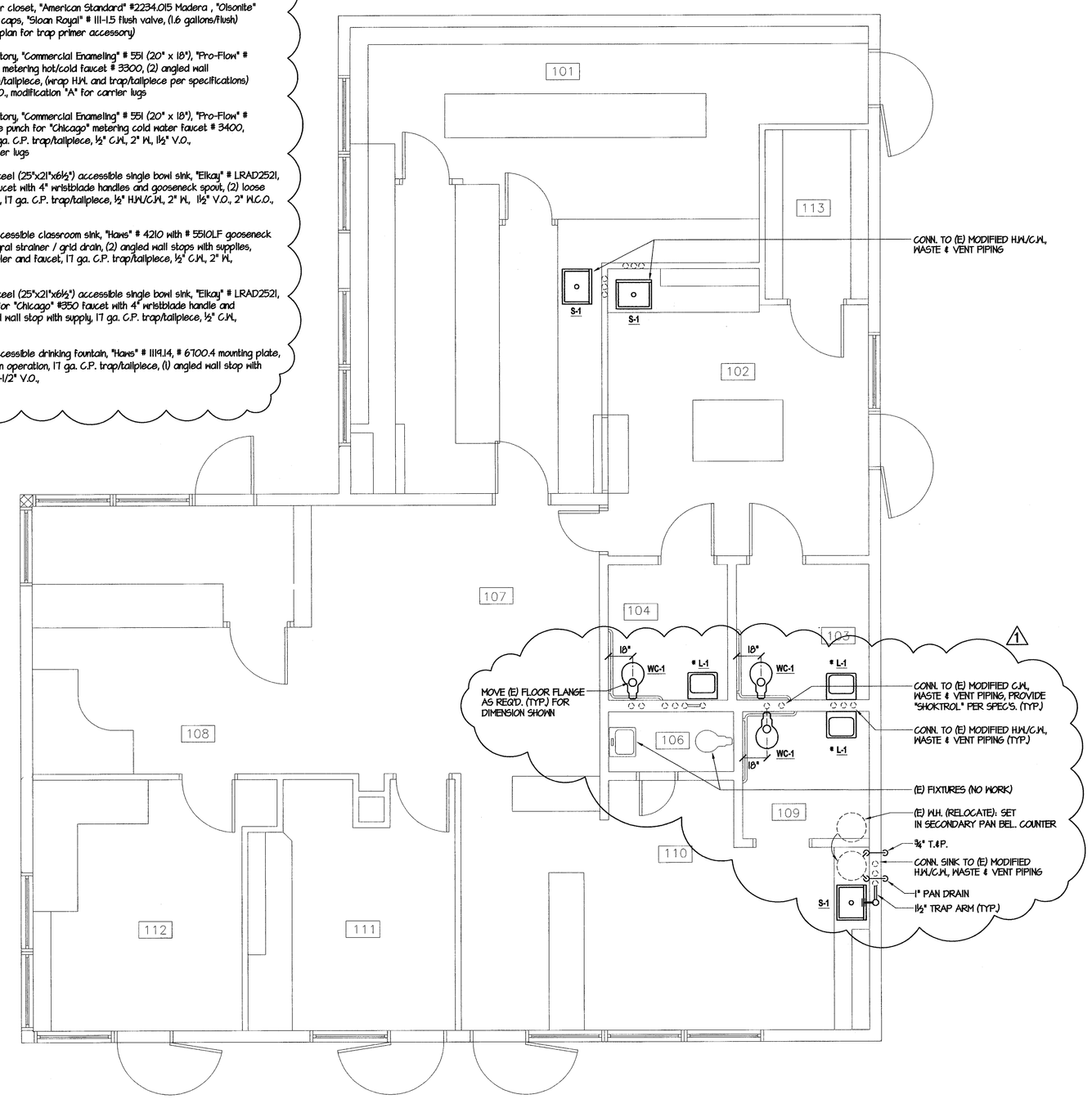

BUILDING 100 PLUMBING FLOOR PLAN

SCALE: 1/4"=1'-0"

* SUPPORT PER A/P-2.11

bfgc Architecture

Bakersfield
5500 ming avenue, suite 450, bakersfield, ca 93309
661.836.4300 fax 661.836.4311

San Jose
150 south first st., suite 200
san jose, california 95113
408.924.0841
fax 408.924.0844

San Luis Obispo
4115 broad street, suite b-6
san luis obispo, ca 93401
805.546.0133
fax 805.546.0504

Oakland
350 frank ogawa plaza., suite 300
oakland, california 94612
510.891.0670
fax 510.891.0674

Principal Architects

david r. cartinal, f.a.i.a.,	C-6564	dean a. tatsuno, a.i.a.,	C- 9190
frank a. ghezzi, a.i.a.,	C-3132	bruce m. biggar, a.i.a.,	C-23134
mark engelen, a.i.a.,	C-8021	brad henderson, a.i.a.,	C-10901
william r. tuculet, a.i.a.,	C-8702	richard l. mello, a.i.a.,	C-18079

MDC
MECHANICAL DESIGN CONCEPTS
5500 Ming Ave., Suite 251
Bakersfield, Ca. 93309
Tel #: (661) 397-2114
Fax #: (661) 397-2116
#02052 PLOTTED: 5-22-07

REGISTERED PROFESSIONAL ENGINEER MARK JAMES BASKIN No. M26378 Exp. 9-30-08 MECHANICAL STATE OF CALIFORNIA

rev. no:	rev. date:	revision:
1		
2		
3		
4		
5	5-25-07	OWNER REVISION

PROJECT TRACKING NO. 63321-10

FILE NO: 15-6

IDENTIFICATION STAMP
DIV. OF THE STATE ARCHITECT
APPL NO: 03-106664
AC.____ FLS.____ SS.____
DATE ____

AS REVISED 7/26/07

MODERNIZATION

FOR

COL. HOWARD
NICHOLS SCHOOL
3401 RENEGADE AVE.
BAKERSFIELD, CA 93306

BAKERSFIELD CITY
SCHOOL DISTRICT

Version Date:

job no.	
date	10/23/02
drawn by	M. ARMSTRONG
chk'd by	R. BANKS
©copyright	2002

Version time:

SITE 100

P 2.11