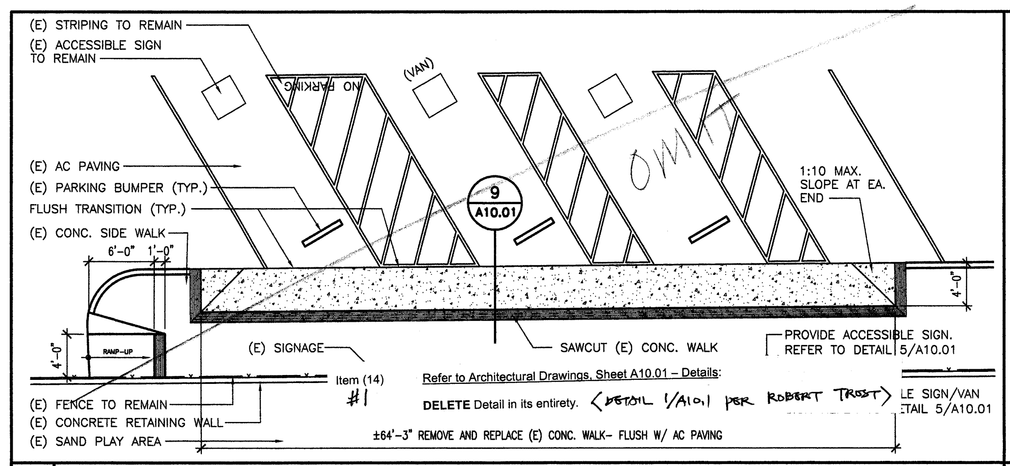

1 HC PARKING 1/8"=1'-0"

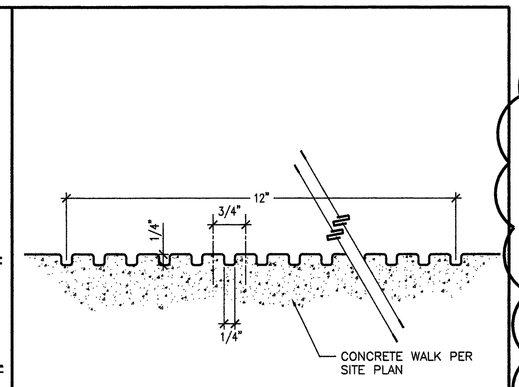

3 GROOVED BORDER HALF SIZE

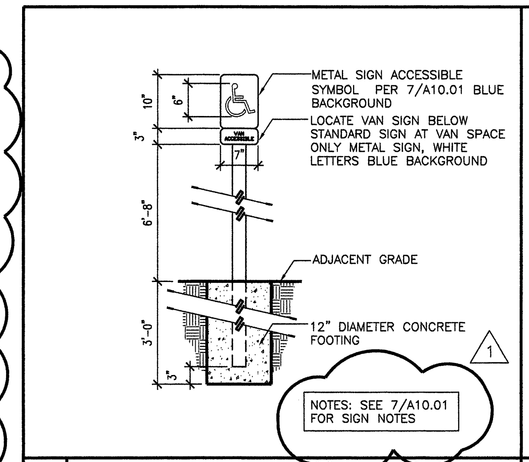

5 ACCESSIBLE SIGN 3/4"=1'-0"

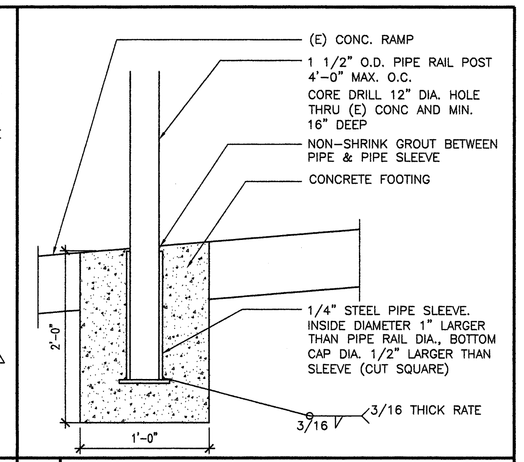

6 CONCRETE FOOTING 1 1/2"=1'-0"

NOTES APPLICABLE TO SIGN DETAIL 5

1. ALL SIGN SUBSTRATES SHALL BE 1/8" THICK REFLECTORIZED ALUMINUM
2. LETTERS AND GRAPHICS SHALL BE SILK SCREENED REFLECTORIZED ALUMINUM
3. ALL SIGNS SHALL BE MOUNTED WITH TAMPER PROOF SCREWS TO GALVANIZED 2" DIAMETER STANDARD STEEL PIPE. PIPE SHALL BE SHOP PRIMED AND PAINTED WITH 2 COATS OF EXTERIOR ENAMEL
4. IN LIEU OF TAMPER PROOF SCREWS, SPOT WELDING END OF BOLT AFTER NUT INSTALLATION IS ACCEPTABLE
5. PROVIDE 3/4" RADIUS AT ALL SIGN CORNERS
6. SIGNS SHALL BE MOUNTED IN A CONSPICUOUS LOCATION

7 SIGN NOTES 1/8"=1'-0"

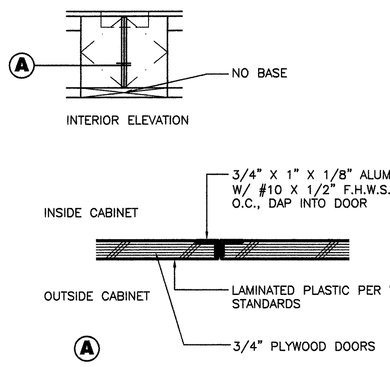

8 ACCESSIBLE STATION 3"=1'-0"

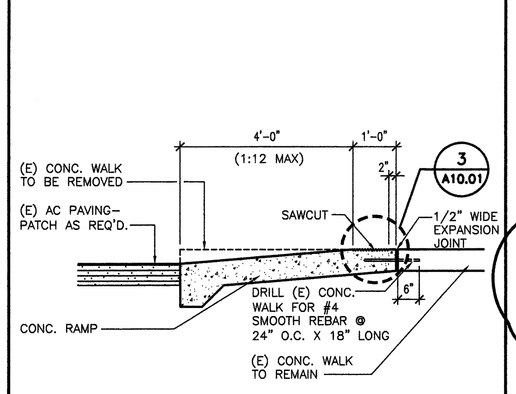

9 CURB RAMP 1/2"=1'-0"

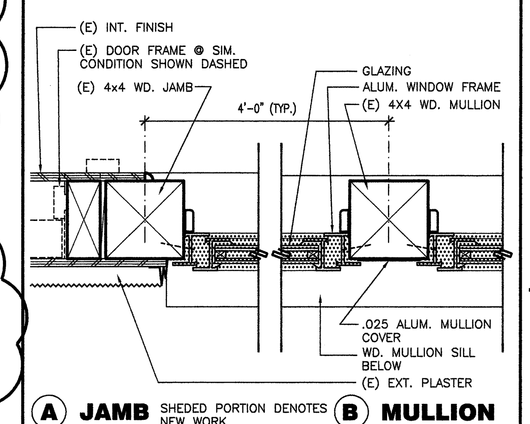

11 JAMB/MULLION 3"=1'-0"

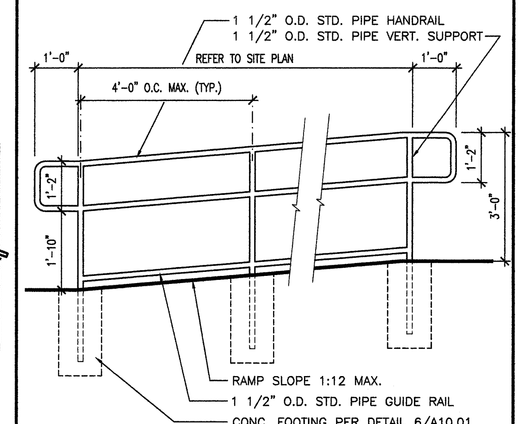

12 RAMP HANDRAILS 1/2"=1'-0"

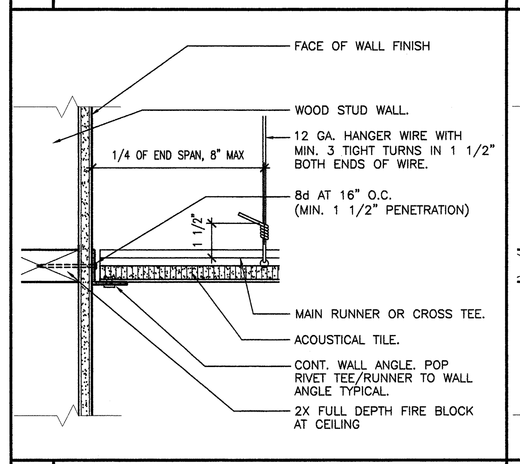

13 FIXED END 3"=1'-0"

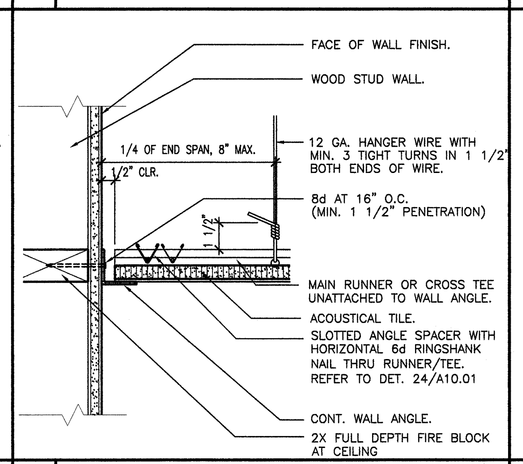

14 FREE END 3"=1'-0"

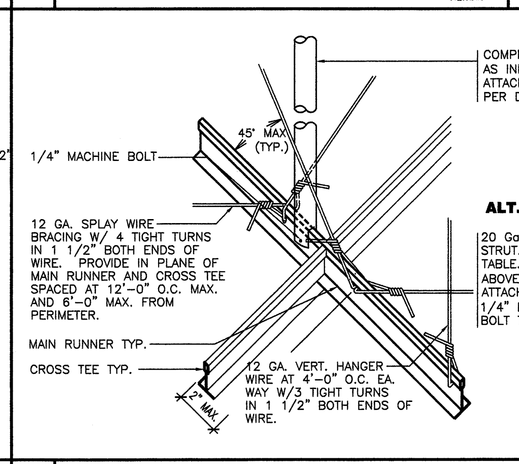

ALT.

20 Ga. METAL STUD COMPRESSION STRUT. SIZE AS INDICATED IN TABLE. ATTACH TO STRUCT. ABOVE PER DETAIL 22/A10.01. ATTACH TO MAIN RUNNER WITH 1/4" DIA. X 1/2" LONG MACHINE BOLT THRU WEB OF STUD.

COMPRESSION STRUT LENGTH

MAX. UNSUPPORTED LENGTH FOR ELECTRICAL CONDUIT USED AS CEILING COMPRESSION STRUT AT 12' -0" O.C.

CONDUIT SIZE	MAX. LENGTH FOR l/r < 200
1/2"ø	3'-11"
3/4"ø	5'-2"
1"ø	6'-6"

COMPRESSION STRUT LENGTH

MAX. UNSUPPORTED LENGTH FOR 20 Ga. METAL STUD USED AS CEILING COMPRESSION STRUT AT 12' -0" O.C.

STUD SIZE	MAX. LENGTH FOR l/r < 200
2 1/2"	10'-0"

NOTE: ALL STUDS SHALL HAVE MINIMUM 1 5/8" FLANGE DEPTH AND 9/16" LIP. CONTRACTOR SHALL VERIFY STANDARD CONFIGURATION PRIOR TO INSTALLATION.

15 SPLAY WIRE 3"=1'-0"

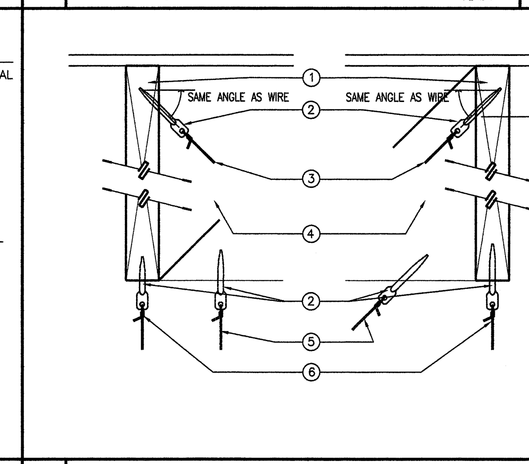

1. SOLID WOOD FRAMING (TYP.)
2. 1/4" DIA. EYE SCREW WITH FULL THREAD EMBEDMENT 1 1/4" MIN. PENETRATION (TYP.)
3. 12 GA SPLAY WIRE W/(4) TIGHT TURNS IN 1-1/2" BOTH ENDS OF WIRE TYP. ALTERNATE LOCATIONS SHOWN DASHED.
4. PROVIDE 2X BLOCKING AS REQUIRED FOR WIRE ATTACHMENT. ATTACH AT EACH END WITH SIMPSON "A35" FRAMING CLIP.
5. 12 GA HANGER WIRE WITH (3) TIGHT TURNS IN 1-1/2" BOTH ENDS OF WIRE TYP. ALTERNATE LOCATIONS SHOWN DASHED.
6. SPLAY WIRE MAY BE ATTACHED TO BOTTOM OF FRAMING MEMBER ONLY WHEN SPLAYED WIRE IS IN PLANE WITH FRAMING MEMBER. (4 TIGHT TURNS IN 1 1/2" AT BOTH ENDS OF SPLAY WIRE).

17 WIRE ATTACHMENT-NON RATED 3"=1'-0"

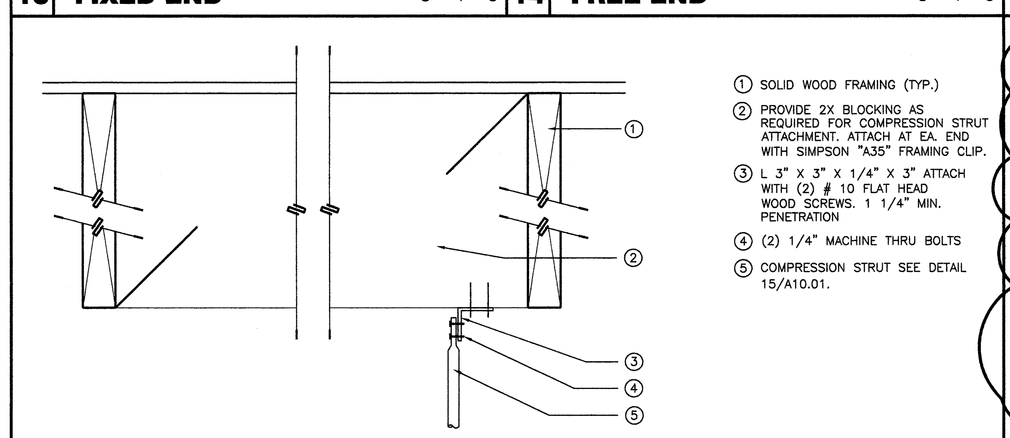

1. SOLID WOOD FRAMING (TYP.)
2. PROVIDE 2X BLOCKING AS REQUIRED FOR COMPRESSION STRUT ATTACHMENT. ATTACH AT EA. END WITH SIMPSON "A35" FRAMING CLIP.
3. L 3" X 3" X 1/4" X 3" ATTACH WITH (2) # 10 FLAT HEAD WOOD SCREWS. 1 1/4" MIN. PENETRATION
4. (2) 1/4" MACHINE THRU BOLTS
5. COMPRESSION STRUT SEE DETAIL 15/A10.01.

19 COMPRESSION STRUT ATTACHMENT-NON RATED 3"=1'-0"

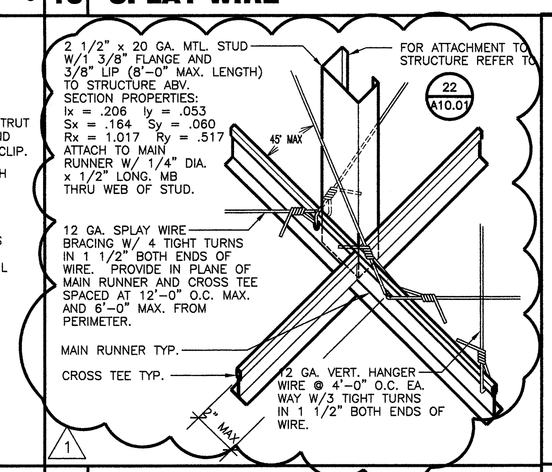

21 ISOMETRIC 3"=1'-0"

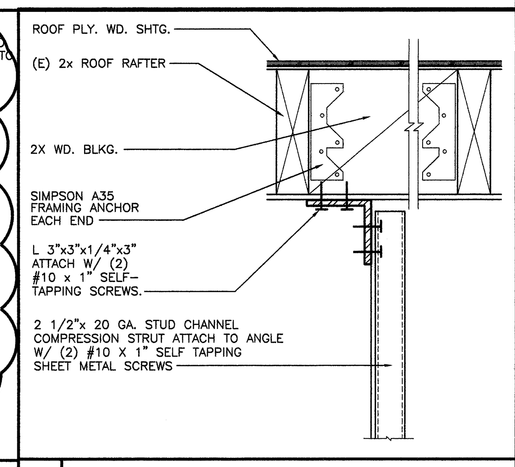

22 SECTION 3"=1'-0"

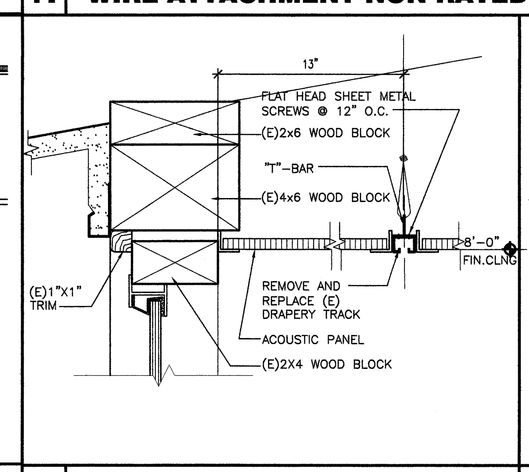

23 SECTION 3"=1'-0"

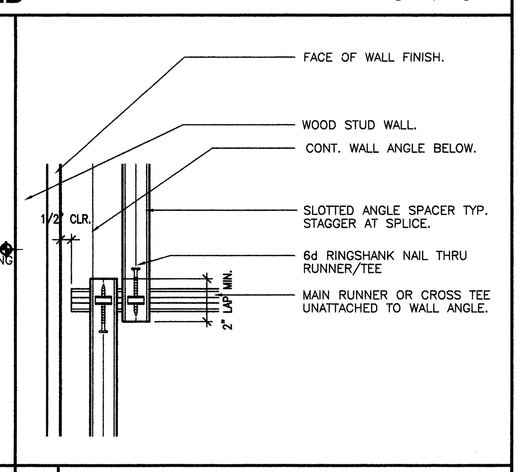

24 PLAN 3"=1'-0"

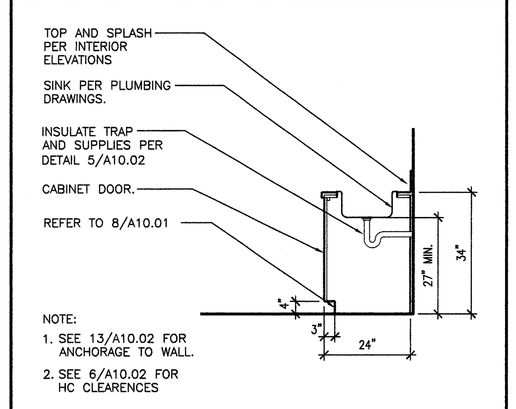

A CABINET PROFILE 1/2"=1'-0"

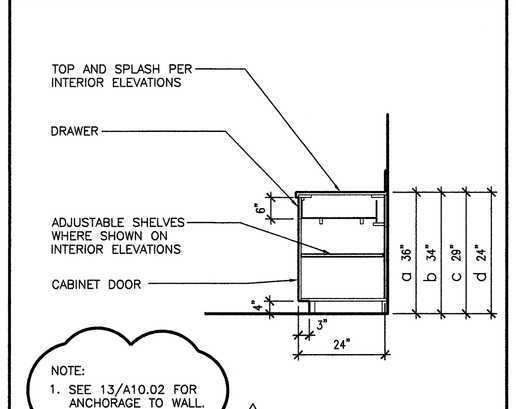

B CABINET PROFILE 1/2"=1'-0"

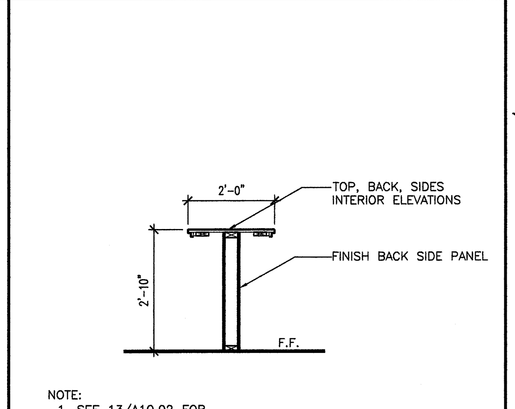

C COUNTER PROFILE 1/2"=1'-0"

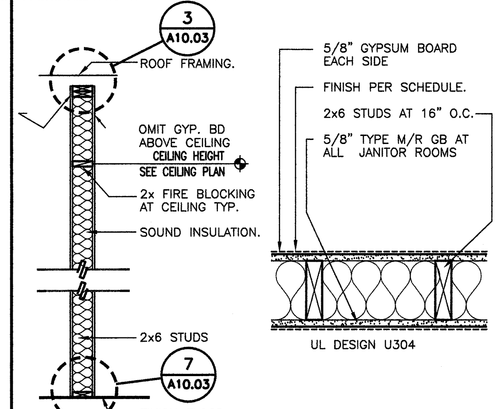

AA WALL TYPE (1 HR. @ BLDG. 200) 1/2"=1'-0"

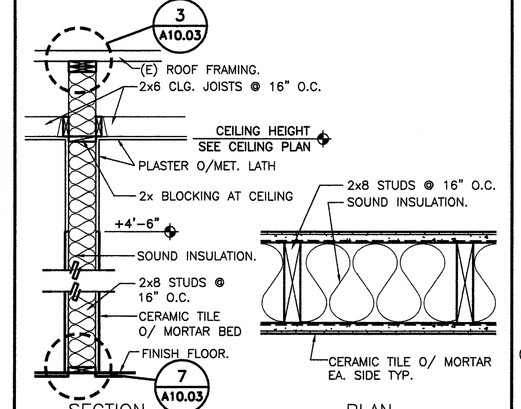

BB WALL TYPE 1/2"=1'-0"

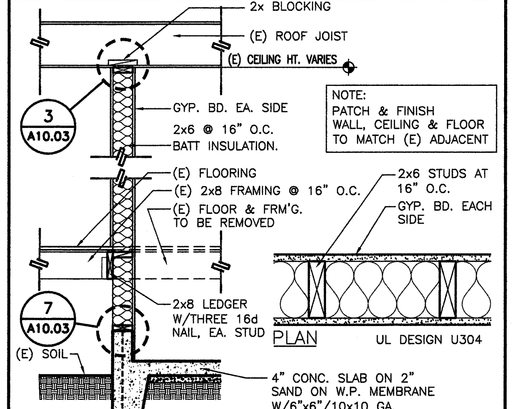

CC WALL TYPE (1 HR. @ BLDG. 200) 1/2"=1'-0"

bfgc Architecture

Bakersfield
5500 ming avenue, suite 450, bakersfield, ca 93309
661.836.4300 fax 661.836.4311

San Jose
150 south first st., suite 200
san jose, california 95113
408.924.0841
fax 408.924.0844

San Luis Obispo
4115 broad street, suite b-6
san luis obispo, ca 93401
805.546.0433
fax 805.546.0504

Oakland
350 frank ogawa plaza., suite 300
oakland, california 94612
510.891.0670
fax 510.891.0674

Principal Architects
david r. cartinal, f.a.i.a., C-6564
frank a. ghezzi, a.i.a., C-3132
mark engellen, a.i.a., C-8021
william r. tuculet, a.i.a., C-8702
dean a. totsuno, a.i.a., C- 9190
bruce m. biggar, a.i.a., C-23134
brad henderson, a.i.a., C-10901
richard l. mello, a.i.a., C-18079

LICENSED ARCHITECT — MARK ENGELLEN — C-8021 — STATE OF CALIFORNIA

rev. no:	rev. date:	revision:
1	5-17-07	OWNER REVISION

FILE NO: 15-6

IDENTIFICATION STAMP
DIV. OF THE STATE ARCHITECT
APPL NO: 03-106664
AC ____ FLS ____ SS ____
DATE 8-26-03

REVISED 1 2

MODERNIZATION

FOR

COLONEL HOWARD NICHOLS SCHOOL
3401 RENEGADE AVE.
BAKERSFIELD, CA. 93306

BAKERSFIELD CITY SCHOOL DISTRICT

DETAILS

Version Date:	Version time:
job no.	02-127
date	8-26-03
drawn by	DESAI
chk'd by	R. TROST
©copyright	2002

A
10.01