1 PARKING STALL

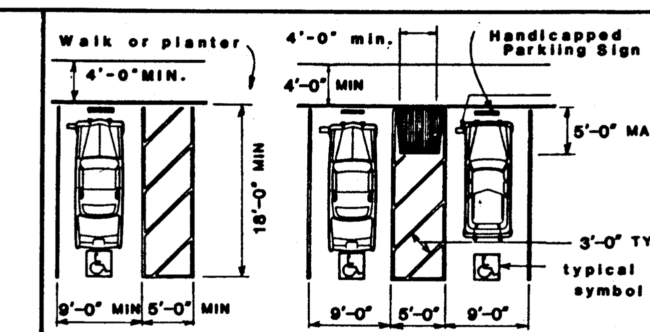

1. HANDICAPPED SPACE MUST PERMIT USE OF EITHER OF CAR DOORS.
2. BUMPERS REQUIRED WHEN NO CURB OR BARRIER IS PROVIDED WHICH WILL PREVENT ENCROACHMENT OF CARS OVER WALKWAYS.
3. WHEELCHAIR USERS MUST NOT BE FORCED TO GO BEHIND PARKED CARS OTHER THAN THEIR OWN.
4. SURFACE SLOPES OF PARKING AREAS FOR THE DISABLED SHOULD BE MINIMAL BUT ARE REQUIRED NOT TO EXCEED 1/4" FT. IN ANY DIRECTION.
5. RAMPS SHALL NOT ENCROACH INTO ANY PARKING SPACE.
6. HANDICAPPED SPACE SHALL BE NEAR ACCESSIBLE PRIMARY ENTRANCE OF BUILDING.
7. REFER TO HANDICAPPED PARKING SIGNS FOR REQUIRED SIGNAGE.
8. THE SURFACE OF EACH PARKING SPACE FOR THE DISABLED IS REQUIRED TO HAVE A 3 FOOT SQUARE INTERNATIONAL SYMBOL OF ACCESSIBILITY STENCILED IN BLUE PAINT.

2 TRAFFIC ENTRY WARNING SIGN

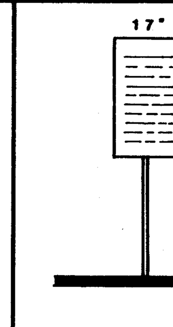

APPROVED FIRE AND PANIC ONLY
APR 4 1991
STATE FIRE MARSHAL SOUTHERN REGION

1. THE LETTERING IS REQUIRED TO BE AT LEAST ONE INCH HIGH STATING: "UNAUTHORIZED VEHICLES NOT DISPLAYING DISTINGUISHING PLACARDS OR LICENSE PLATES ISSUED FOR PHYSICALLY HANDICAPPED PERSONS MAY BE TOWED AWAY AT OWNER'S EXPENSE. TOWED VEHICLES MAY BE RECLAIMED AT ______ OR BY TELEPHONING ______."
EXCEPTION: WHEN LESS THAN 5 PARKING SPACES ARE PROVIDED AT BUILDINGS AND FACILITIES SUBJECT TO THE REGULATIONS, THE SPACE FOR THE DISABLED NEED NOT BE RESERVED EXCLUSIVELY OR IDENTIFIED FOR HANDICAPPED USE ONLY.
2. POST A PERMANENT 17" X 22" SIGN IN A CONSPICUOUS PLACE AT EACH ENTRANCE TO OFFSTREET PARKING FACILITIES WITH "UNAUTHORIZED VEHICLE SIGN".
3. THE STATE OF CALIFORNIA ERRORED IN THE LANGUAGE OF THIS SIGN BY NOT QUALIFYING THIS STATEMENT TO REFER TO PARKING IN AREAS RESERVED FOR THE HANDICAPPED WITHIN THE PARKING LOT, WHICH IS THE INTENT OF THE LAW. AS IT NOW READS, THE SIGN WOULD BE APPLICABLE TO THE ENTIRE LOT.

3 HANDICAP SYMBOL

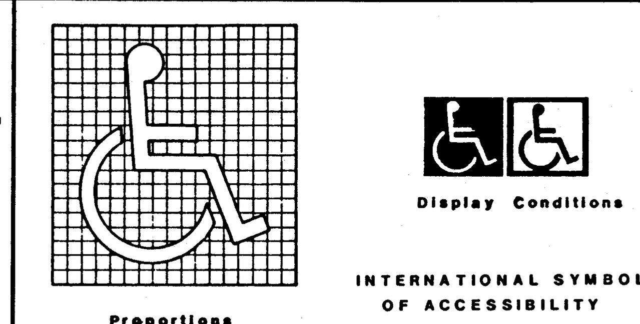

1. THE INTERNATIONAL SYMBOL OF ACCESSIBILITY SHALL BE THE STANDARD USED TO IDENTIFY FACILITIES THAT ARE ACCESSIBLE TO AND USABLE BY PHYSICALLY HANDICAPPED PERSONS. THE SYMBOL SHALL CONSIST OF A WHITE FIGURE ON A BLUE BACKGROUND. THE BLUE SHALL BE EQUAL TO COLOR NO. 15090 IN FEDERAL STANDARD 595A.
2. CHARACTERS AND SYMBOLS SHALL CONTRAST WITH THEIR BACKGROUND, EITHER LIGHT CHARACTERS ON DARK BACKGROUND OR DARK CHARACTERS ON LIGHT BACKGROUND.
3. THE SIGN IS TO BE CENTERED AT THE INTERIOR END OF PARKING STALL.

4 HANDICAPPED PARKING SIGNS

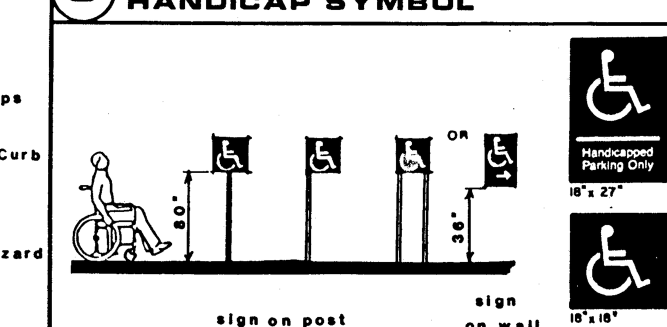

ALL PRIMARY ENTRANCES TO BUILDINGS AND FACILITIES ARE REQUIRED TO BE MADE ACCESSIBLE. A PRIMARY ENTRANCE IS DEFINED AS, "...ANY ENTRANCE TO A FACILITY WHICH HAS A SUBSTANTIAL FLOW OF PEDESTRIANS TO ANY SPECIFIC MAJOR FUNCTION OF THE FACILITY." REVOLVING DOORS CAN NOT BE USED AS A REQUIRED ENTRANCE FOR THE HANDICAPPED.

1. ACCESSIBLE BUILDING ENTRANCES ARE REQUIRED TO BE IDENTIFIED WITH AT LEAST ONE STANDARD SIGN AND ADDITIONAL DIRECTIONAL SIGNS AS REQUIRED TO BE VISIBLE TO PERSONS ALONG APPROACHING PEDESTRIAN WAYS.
2. THE INTERNATIONAL SYMBOL OF ACCESSIBILITY IS REQUIRED TO IDENTIFY FACILITIES THAT ARE ACCESSIBLE. THE SYMBOL IS A WHITE FIGURE ON A BLUE BACKGROUND (COLOR NO. 15090 IN FEDERAL STANDARD 595A).
3. WHEN A BUILDING CONTAINS AN ENTRANCE OTHER THAN THE MAIN ENTRANCE WHICH IS RAMPED OR LEVEL FOR USE BY HANDICAPPED PERSONS, A SIGN SHOWING ITS LOCATION IS REQUIRED TO BE POSTED AT OR NEAR MAIN ENTRANCE.
4. RECESSED DOORMATS TO BE ANCHORED TO FLOOR OR APPROVED EQUAL TO PREVENT INTERFERENCE WITH WHEELCHAIR TRAFFIC.

5 CURB RAMPS

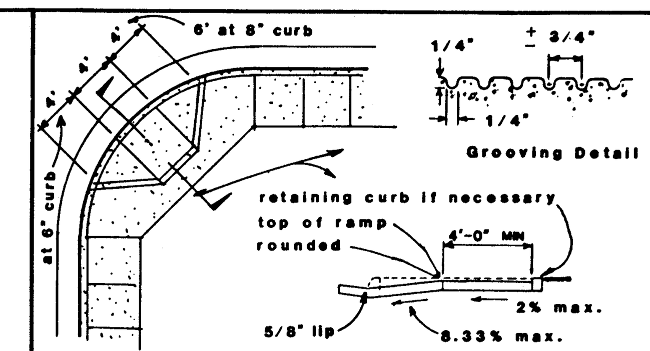

1. CURB RAMPS ARE REQUIRED ANYWHERE A PEDESTRIAN'S PATH OF TRAVEL CROSSES A CURB, INCLUDING EACH CORNER OF STREET INTERSECTIONS.
2. CURB RAMPS MAY BE CONSTRUCTED EITHER BY LOWERING AN AREA AT SIDEWALK OR BY BUILDING UP THE SURFACE FROM FACE OF CURB INTO STREET.
3. CURB RAMP SURFACES, INCLUDING SLOPING SIDES, ARE REQUIRED TO BE SLIP RESISTANT AND TO BE A CONTRASTING FINISH FROM ADJACENT SIDEWALK.
4. CONTACT ROAD DEPARTMENT - PUBLIC WORKS PRIOR TO INSTALLATION OF CURB RAMP.

6 WALKS, SIDEWALKS, & GRATINGS

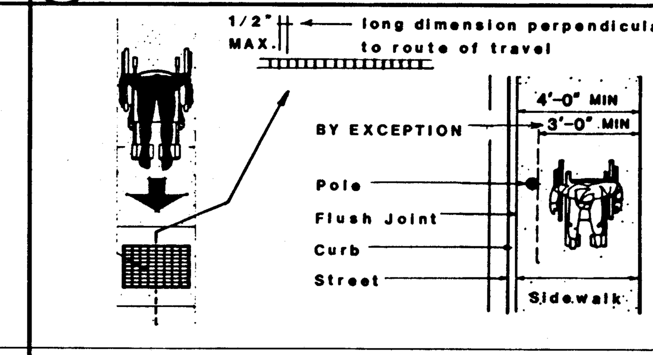

1. ACCESSIBILITY - PRIVATE WALKS AND SIDEWALKS ARE REQUIRED TO BE ACCESSIBLE IF THEY LEAD TO BUILDINGS AND FACILITIES REQUIRED TO BE ACCESSIBLE.
2. CHANGES IN LEVEL:
A. ABRUPT CHANGES IN LEVEL EXCEEDING 1/2 INCH ARE NOT ALLOWED.
B. CHANGES IN LEVEL NOT EXCEEDING 1/4 INCH MAY BE VERTICAL.
C. CHANGES 1/4 TO 1/2 INCH HIGH ARE REQUIRED TO BE BEVELED WITH A SLOPE NO GREATER THAN 1 VERTICAL TO 2 HORIZONTAL.
D. CHANGES IN LEVELS EXCEEDING 1/2 INCH MUST COMPLY WITH THE REQUIREMENTS FOR CURB RAMPS.
3. SURFACES:
SLIP-RESISTANT (WITH MEDIUM SALT FINISH) - SLOPE OF LESS THAN 6%.
SLIP-RESISTANT - SLOPE OF GREATER THAN 6%.
4. CROSS SLOPES -1/4" PER FOOT MAXIMUM. EXCEPTION: 1/2" PER FOOT ALLOWED IF THE ENFORCING AGENCY GRANTS AN UNREASONABLE HARDSHIP.
5. GRATINGS - GRID OPENINGS 1/2" OR LESS IN DIRECTION OF TRAFFIC FLOW.
6. WARNING CURBS - REFER TO RAMP NOTE #6.

7 RAMPS

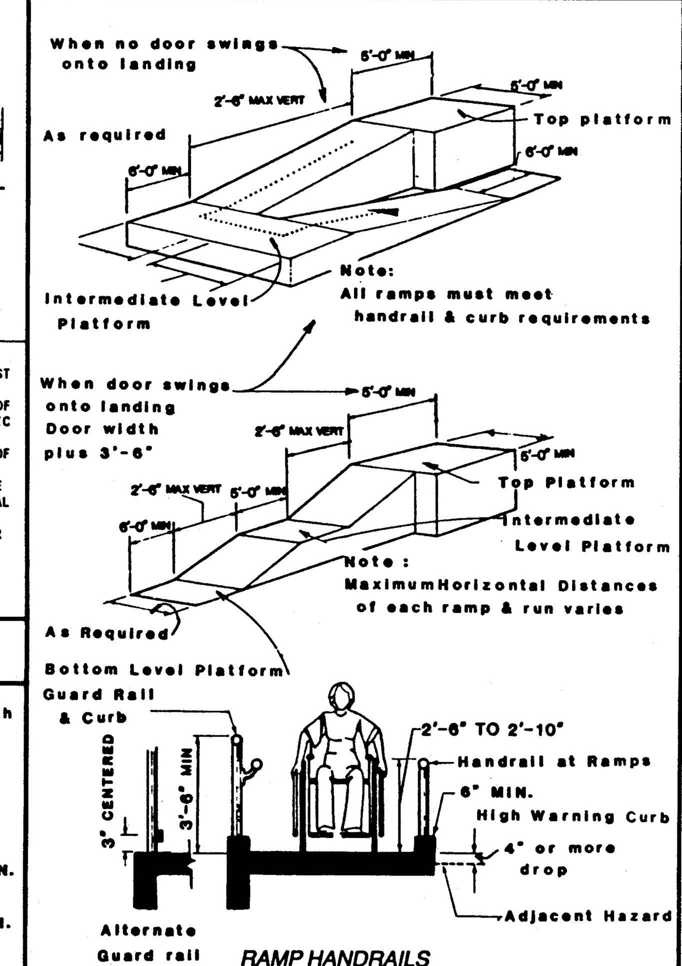

1. MAXIMUM ALLOWABLE SLOPE OF A RAMP IS 1:12.
2. LANDINGS ARE REQUIRED AT TOP AND BOTTOM OF EVERY RAMP.
3. WIDTH OF RAMPS SERVING PRIMARY ENTRANCES TO BUILDING WITH
A. OCCUPANT LOAD GREATER THAN 300 - 60" CLEAR WIDTH.
B. OCCUPANT LOAD OF LESS THAN 50 - 36" CLEAR WIDTH.
4. HANDRAILS ARE REQUIRED ON EACH SIDE OF RAMP, CONTINUOUS FOR FULL LENGTH OF RAMP ON RAMPS WITH A SLOPE EXCEEDING 1:15.
5. SLIP-RESISTANT SURFACE REQUIRED ON RAMPS WITH SLOPES 1:16 OR GREATER.
6. WARNING CURBS - WHERE AN ABRUPT CHANGE IN LEVEL EXCEEDING 4 INCHES OCCURS, EXCEPT BETWEEN A WALK OR SIDEWALK AND AN ADJACENT STREET OR DRIVEWAY, A 6" HIGH WARNING CURB ABOVE THE WALK OR SIDEWALK SURFACE IS REQUIRED TO WARN THE BLIND OF THE POTENTIAL DROP OFF. WHEN A GUARDRAIL OR HANDRAIL IS PROVIDED WITH A GUIDERAIL CENTERED 2 TO 4 INCHES ABOVE THE WALK, A WARNING CURB IS NOT REQUIRED.
7. HANDRAILS MUST EXTEND 12" PAST TOP AND BOTTOM OF RAMP.

8 TELEPHONES

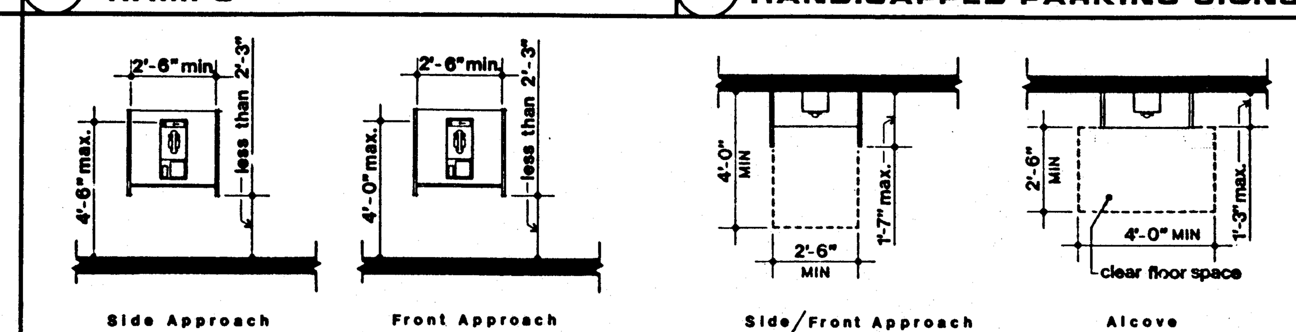

1. APPROACH - A CLEAR SPACE 30" BY 48" THAT ALLOWS EITHER A FORWARD OR A PARALLEL APPROACH TO THE TELEPHONE IS REQUIRED. THE CLEAR SPACE SHOWN MAY INCLUDE KNEE SPACE UNDER TELEPHONE ENCLOSURES. ONE SIDE OF THE CLEAR SPACE SHALL ADJOIN ANOTHER CLEAR FLOOR SPACE OF AT LEAST THE SAME SIZE. IF THE TELEPHONE IS LOCATED IN AN ALCOVE MORE THAN 24" DEEP AND THE FRONT APPROACH IS DESIGNED, THE 30" WIDE SPACE IS REQUIRED TO HAVE AN ADDITIONAL 6" ON ONE SIDE. IF THE SIDE APPROACH IS DESIGNED AND THE ALCOVE IS MORE THAN 15" DEEP, THE 48" WIDE SPACE IS REQUIRED TO HAVE AN ADDITIONAL 12" ON ONE SIDE.
2. FLOORS - FLOORS ARE REQUIRED TO BE LEVEL AND SLIP RESISTANT AT TELEPHONES.
3. ENCLOSURES - WHEN PROVIDED, ENCLOSURES ARE TO MEET THE FOLLOWING REQUIREMENTS:
A. SIDE APPROACH - DIMENSIONS AS SHOWN.
B. FORWARD APPROACH - IF THE OVERHANG IS GREATER THAN 12", THE CLEAR WIDTH IS TO BE 30". IF THE CLEAR WIDTH IS LESS THAN 30" THE LOWEST OVERHANGING PART IS TO BE AT LEAST 27" FROM THE FLOOR.
C. FULL HEIGHT ENCLOSURES - ENTRANCES ARE TO BE 30" WIDE.
D. PROTRUSIONS - WHERE ENCLOSURES PROTRUDE INTO HALLS, CORRIDORS, OR AISLES, THEY CAN NOT REDUCE THE CLEAR WIDTH OF THE ACCESSIBLE PATH OR MANEUVERING SPACE. IF THEY PROTRUDE MROE THAN 4", LEADING EDGES ARE TO BE AT OR BELOW 27" FROM THE FLOOR SO THEY CAN BE DETECTED BY A BLIND PERSON'S CANE.
4. SPECIAL REQUIREMENTS - THE CORD FROM THE TELEPHONE TO THE HANDSET IS TO BE LEAST 29" LONG. TELEPHONE BOOKS, IF PROVIDED, SHOULD BE LOCATED SO THYE CAN BE USED BY A PERSON IN A WHEELCHAIR, BUT THE REQUIREMENT IS NOT INCLUDED IN THE REGULATIONS. WHERE AVAILABLE, PUSHBUTTON CONTROLS ARE TO BE PROVIDED. AT LEAST ONE TELEPHONE, OR AT LEAST ONE TELEPHONE PER BANK OF TELEPHONES, IS REQUIRED TO BE EQUIPPED WITH A VOLUME CONTROL. EQUIP TELEPHONES WITH A RECEIVER THAT GENERATES A MAGNETIC FIELD IN THE AREA OF THE RECEIVER CAP.

9 DRINKING FOUNTAIN

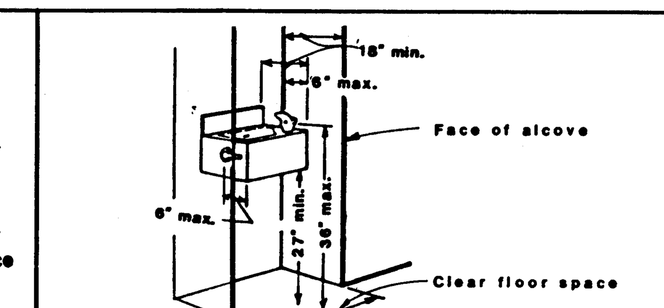

1. DRINKING FOUNTAINS (WATER FOUNTAINS) ARE TO BE LOCATED WITHIN ALCOVES OR POSITIONED SO AS NOT TO BE IN A CORRIDOR OR WALK. THE FOUNTAIN IS REQUIRED TO BE APPROACHED FROM THE FRONT. EXCEPTION: WHEN THE ENFORCING AGENCY ALLOWS AN UNREASONABLE HARDSHIP, DRINKING FOUNTAINS MAY BE LOCATED IN A PATH OF TRAVEL. BUT THEY MUST HAVE A TEXTURED AREA FOR 1 FOOT AROUND THE FOUNTAIN, OR WING WALLS WILL BE REQUIRED ON EACH SIDE OF THE FOUNTAIN. THE TEXTURED SURFACE IS TO BE CLEARLY IDENTIFIABLE BY A BLIND PERSON USING A CANE.
A. IT IS APPROPRIATE TO USE THIS ONLY OVER CONCRETE OR HARD SURFACES WHICH CAN BE GROOVED (SIMILAR TO CURB RAMPS), WITH 1/4 INCH GROOVES, 1 1/2 INCHES ON CENTER.
B. THE WING WALLS ARE REQUIRED TO BE WITHIN 6 INCHES OF THE FLOOR.
2. THE BUBBLER CAN BE ACTIVATED BY A HAND-OPERATED LEVER, BY A PUSH BAR ALONG THE FRONT OF THE FOUNTAIN, OR BY ANOTHER APPROVED CONTROL EASILY OPERATED BY A HANDICAPPED PERSON. THE WATER STREAM IS TO BE PARALLEL TO THE FRONT EDGE OF THE FOUNTAIN.

10 DOOR CONSTRUCTION

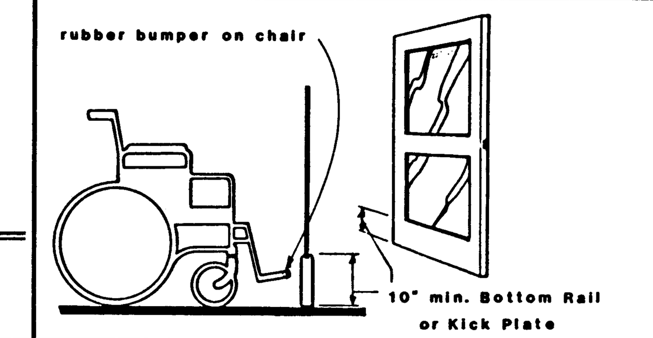

THE BOTTOM 10 INCHES OF DOORS, EXCEPT AUTOMATIC AND SLIDING DOORS, ARE REQUIRED TO HAVE A SMOOTH UNINTERRUPTED SURFACE TO ALLOW THE DOOR TO BE OPENED BY A WHEELCHAIR FOOTREST WITHOUT CREATING A TRAP OR HAZARDOUS CONDITION.

EXCEPTION: THE STATE ARCHITECT HAS STATED THAT THIS REGULATION IS NOT INTENDED TO PREVENT THE USE OF "HERCULITE" TYPE GLASS DOORS.

11 DOOR THRESHOLD, HARDWARE, & CLOSERS

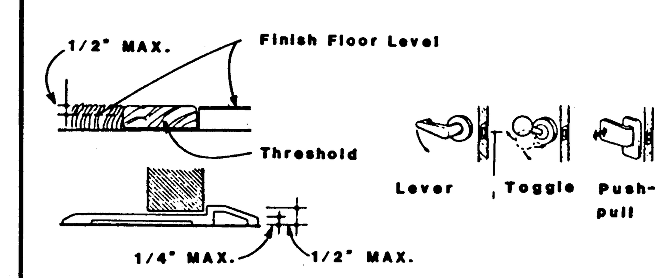

1. HARDWARE. HAND ACTIVATED DOOR OPENING HARDWARE WITH NO GRASPING OR WRIST MOVEMENT IS REQUIRED TO BE CENTERED BETWEEN 30 AND 44 INCHES HIGH.
2. LATCHING AND LOCKING DOORS THAT ARE HAND ACTIVATED AND WHICH ARE IN A PATH OF TRAVEL HAVE TO BE OPERABLE WITH A SINGLE EFFORT (LEVERS, PUSH-PULLS, OR PANIC DEVICES).
3. LOCKED EXIT DOORS ARE REQUIRED TO OPERATE AS DESCRIBED ABOVE IN THE DIRECTOR OF EGRESS WITHOUT USE OF KEY OR SPECIAL KNOWLEDGE OR EFFORT.
4. THRESHOLDS ARE REQUIRED TO BE NO MORE THAN 1/2 INCH HIGH. BEVEL OR SLOPE THE EXPOSED EDGE AT AN ANGLE NOT EXCEEDING 45 DEGREES SO THAT NO SINGLE VERTICAL CHANGE OF ELEVATION EXCEEDS 1/4 INCH.
5. CLOSURE PRESSURE TO BE 5 LB. MAXIMUM ON INTERIOR DOORS, 8.5 LB. ON EXTERIOR DOORS AND 15 LB. ON FIRE DOORS.

12 DOOR CLEARANCES

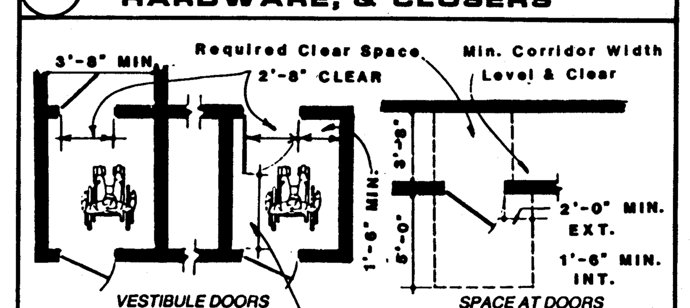

1. DOUBLE DOOR WIDTH SHALL BE 3'-0" NOMINAL OPENING (ACTIVE LEAF).
2. A LEVEL AREA IS DEFINED AS A SURFACE WHICH DOES NOT SLOPE MORE THAN 1/4 INCH IN 1 FOOT IN ANY DIRECTION.
EXCEPTIONS:
A. R-3 OCCUPANCIES (DWELLINGS AND BOARDING HOUSES) WITHIN INDIVIDUAL UNITS OF R-1 OCCUPANCIES (HOTELS, APARTMENT HOUSES, CONVENTS AND MONASTERIES) A DOOR MAY OPEN ON THE TOP STEP OF A FLIGHT OF STAIRS OR ON AN EXTERIOR LANDING, PROVIDED THE DOOR DOES NOT SWING OVER THE TOP STEP OR EXTERIOR LANDING AND THE LANDING IS NOT MORE THAN 7 1/2 INCHES BELOW THE FLOOR LEVEL.
B. R-3 OCCUPANCIES SCREEN DOORS AND STORM DOORS MAY SWING OVER STAIRS OR STEPS.
C. R-3 OCCUPANCIES, PRIVATE GARAGES & SHEDS WHERE A DOOR OPENS OVER A LANDING, THE LANDING IS REQUIRED TO HAVE A LENGTH EQUAL TO THE WIDTH OF THE DOOR.
3. IN A VESTIBULE, (THE SPACE BETWEEN TWO CONSECUTIVE DOORS) IT IS REQUIRED TO PROVIDE A MINIMUM OF 48 INCHES OF CLEAR SPACE FROM ANY DOOR OPENING INTO THE VESTIBULE WHEN THE DOOR IS OPEN. DOORS IN A SERIES SHALL SWING EITHER IN THE SAME DIRECTION OR AWAY FROM THE SPACE BETWEEN THE DOORS. THIS REQUIREMENT DOES NOT APPLY TO A REQUIRED EXIT STAIRWAY.

13 URINALS

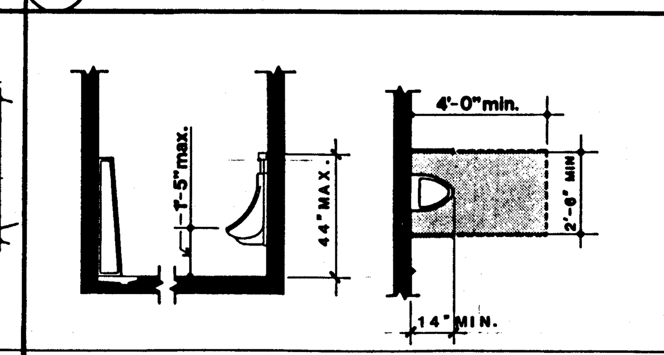

FLUSH CONTROLS ARE TO BE HAND OPERATED, ARE TO MEET THE SAME REQUIREMENTS AS THE FLUSH CONTROLS FOR THE WATER CLOSET, AND ARE TO BE NO MORE THAN 44 INCHES ABOVE THE FLOOR.
FLUSH CONTROL SHALL BE OPERATED BY OSCILLATING HANDLE WITH 5 LPF MAX. OPERATING FORCE

14 LAVATORY

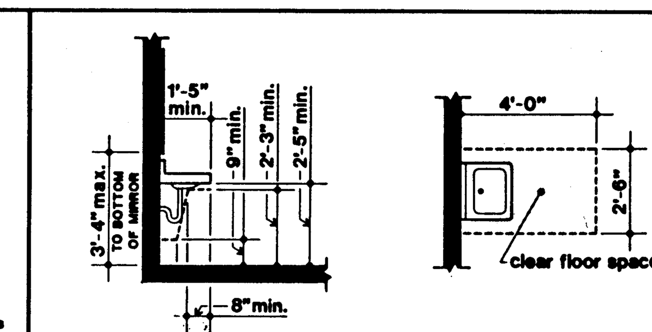

1. PROVIDE A CLEARANCE AS SHOWN. PROVIDE TOE CLEARANCE AT LEAST 30 INCHES WIDE, TO 9 INCHES ABOVE THE FLOOR AND 17 INCHES DEEP FROM THE FRONT OF THE LAVATORY.
2. PROVIDE A CLEAR FLOOR SPACE 30 INCHES BY 48 INCHES IN FRONT OF THE LAVATORY. THE CLEAR SPACE MAY EXTEND INTO KNEE AND TOE SPACE UNDERNEATH THE LAVATORY.
3. INSULATE OR COVER HOT WATER AND DRAIN PIPES UNDER LAVATORIES. NO SHARP OR ABRASIVE SURFACES ARE ALLOWED UNDER LAVATORIES.
4. FAUCET CONTROLS AND OPERATING MECHANISMS ARE REQUIRED TO BE OPERABLE WITH ONE HAND AND CAN NOT REQUIRE GRASPING, PINCHING OR TWISTING OF THE WRIST. THE FORCE REQUIRED TO ACTIVATE CONTROLS IS NOT TO EXCEED 5 LBF. LEVER-OPERATED, PUSH-TYPE, AND ELECTRONICALLY CONTROLLED MECHANISMS ARE EXAMPLES OF ACCEPTABLE DESIGNS. SELF-CLOSING VALVES ARE ALLOWED IF TAHE FAUCET REMAINS OPEN FOR AT LEAST 10 SECONDS.

15 TOILET IDENTIFICATION & BUILDING SIGNS

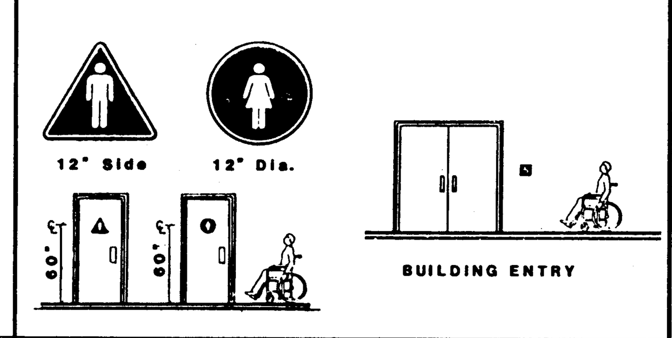

1. CHARACTERS AND SYMBOLS ARE REQUIRED TO CONTRAST WITH THEIR BACKGROUND.
2. SYMBOLS ARE TO BE CENTERED ON DOOR 60" ABOVE FLOOR AND ARE TO BE DISTINCTLY DIFFERENT FROM THE DOOR IN COLOR AND CONTRAST.
3. SIGNS TO BE 1/4" THICK.

16 RESTROOMS

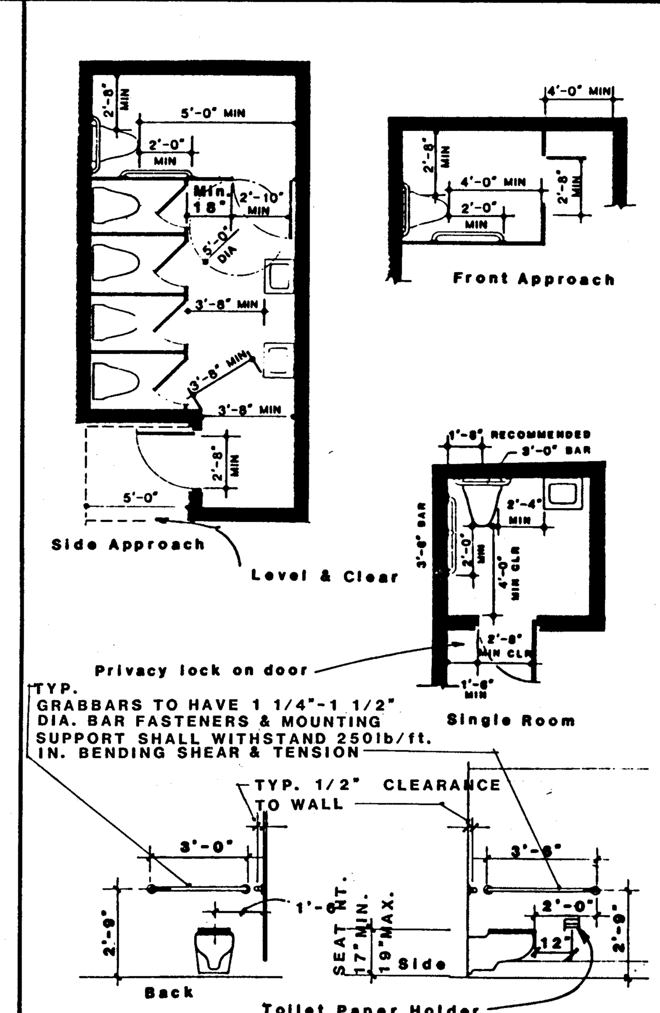

1. SUFFICIENT SPACE IS REQUIRED IN TOILET ROOM FOR A WHEELCHAIR MEASURING 30" WIDE BY 48" LONG TO ENTER ROOM AND PERMIT DOOR TO CLOSE.
2. WHEN THE DOOR IS LOCATED IN CORRIDOR SIDEWALL AND SWINGS INTO CORRIDOR, MINIMUM WIDTH OF CORRIDOR SHALL BE 60" UNLESS OTHER STATE OR LOCAL BUILDING CODES ALLOW LESSER CORRIDOR WIDTH.
3. FLUSH CONTROL SHALL BE LOCATED TO MINIMIZE EXCESSIVE BODY MOVEMENT AND SHALL BE AN OSCILLATING HANDLE WITH MAXIMUM 5 LBF. OPERATING FORCE, ELECTRIC OPERATION OR APPROVED EQUAL.

COMPARTMENT (SIDE & FRONT ENTRANCE):
1. CLOSER - EQUIP THE DOOR INTO THE STALL WITH AUTO CLOSING DEVICE.
2. CLEARANCE - PROVIDE 44" WIDE CLEAR PATH TO STALL AND A 48" SPACE IN FRONT OF COMPARTMENT DOOR, MEASURED AT RIGHT ANGLES TO DOOR.
3. TURNING CIRCLE - PROVIDE A SPACE 60" IN DIAMETER AND 27" HIGH OR 56" X 63" WITH 12" MAXIMUM INTRUSION BY DOOR.

17 CONTROL HEIGHTS

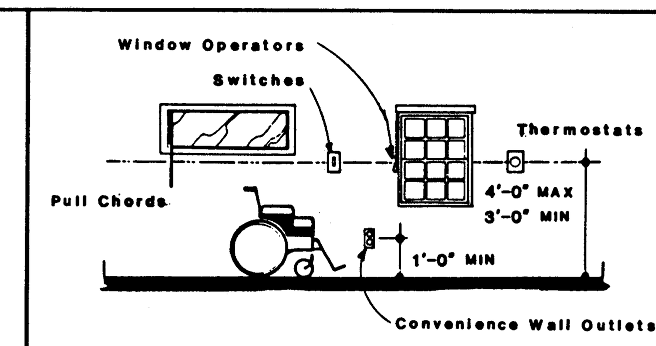

1. ITEMS SHOWN AND SIMILAR CONTROLS OF FREQUENT AND ESSENTIAL USE ARE TO BE CENTERED BETWEEN 36 INCHES AND 48 INCHES FROM THE FLOOR.
2. ELECTRICAL CONVENIENCE FLOOR OUTLETS AND BASEBOARD ELECTRICAL OUTLETS USED IN RELOCATABLE PARTITIONS OR WINDOW WALLS ARE NOT SUBJECT TO THE MINIMUM HEIGHT REQUIREMENTS.

18 TOILET ACCESSORIES

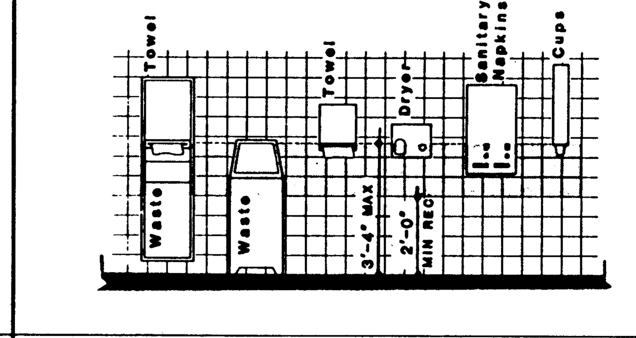

1. WHERE TOWEL, SANITARY NAPKIN AND WASTE RECEPTACLES AND SIMILAR DISPENSING AND DISPOSAL FIXTURES ARE PROVIDED, AT LEAST ONE OF EACH TYPE IS TO BE LOCATED WITH ALL OPERABLE PARTS, INCLUDING COIN SLOTS, WITHIN 40 INCHES FROM THE FLOOR.
2. MOUNT MIRRORS WITH THE BOTTOM EDGE NO MORE THAN 30 INCHES FROM THE FLOOR.
3. LOCATE TOILET TISSUE DISPENSERS ON THE WALL WITHIN 12 INCHES OF THE FRONT EDGE OF THE TOILET SEAT.
4. LOCATE GRAB BARS ON EACH SIDE OR ONESIDE ONE BACK OF TOILET AS SHOWN.
5. IF GRAB BARS ARE MOUNTED ADJACENT TO WALL THE SPACE BETWEEN WALL AND BAR IS TO BE 1 1/2".
6. GRAB BARS SHALL NOT ROTATE.
7. GRAB BARS AND ANY SURFACE ADJACENT TO THEM CAN NOT HAVE ANY SHARP OR ABRASIVE ELEMENTS. EDGES ARE TO HAVE A MINIMUM RADIUS OF 1/8".
8. RAB BARS AND MOUNTINGS SHALL WITHSTAND 250 LBS. SIDE, 500 LBS. TOTAL WEIGHT/MIDDLE.
9. REFER TO RESTROOMS DIAGRAM #16 FOR GRAB BARS.

19 STAIRS

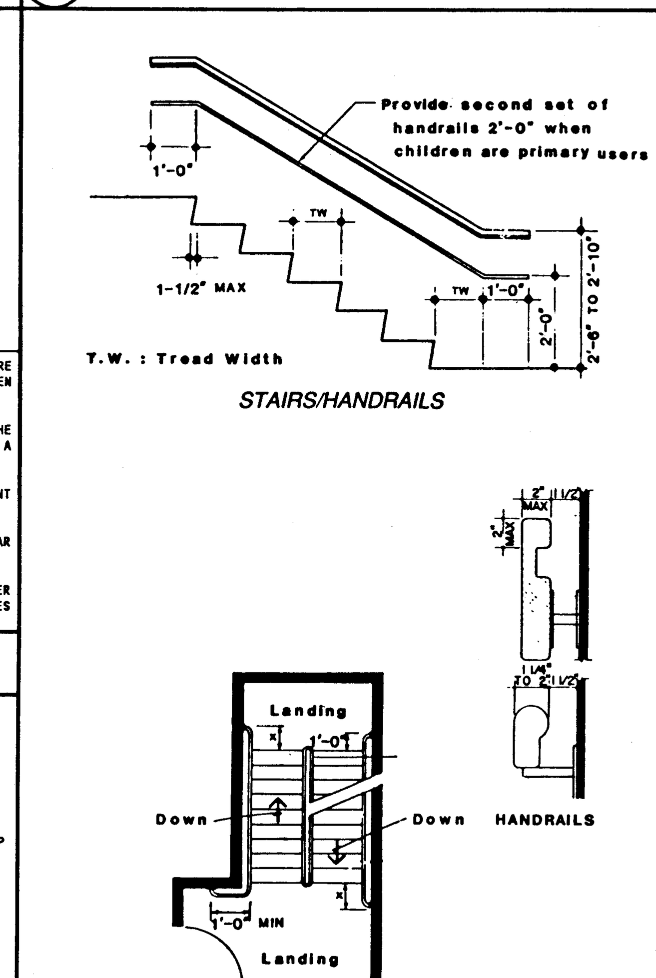

1. MARK APPROACH AND THE LOWER TREAD OF EACH FLIGHT OF EACH STAIR BY A STRIP 2" WIDE (AT EXTERIOR OF BUILDING, ALL TREADS SHALL BE MARKED WITH A 2" STRIP). PLACE STRIP PARALLEL TO AND NOT MORE THAN 1" FROM NOSE OF STEP AT LANDING TO ALERT THE VISUALLY IMPAIRED. THE STRIP IS REQUIRED TO BE OF MATERIALS AT LEAST AS SLIP RESISTANT AS THE OTHER TREADS OF STAIRS AND TO BE OF A CLEARLY CONTRASTING COLOR. A PAINTED STRIP IS ACCEPTABLE (INTERIOR).
2. 80" CLEAR IS REQUIRED FOR HEADROOM IN WALKS, HALLS, CORRIDORS, PASSAGEWAYS, AISLES AND OTHER CIRCULATION SPACES.
3. THE RUN OF EVERY STEP IS REQUIRED TO BE NO LESS THAN 10" AS MEASURED HORIZONTALLY BETWEEN VERTICAL PLANES OF THE FURTHERMOST PROJECTION OF ADJACENT TREADS.
4. THE TREADS ARE REQUIRED TO BE SMOOTH, ROUNDED OR CHAMFERED WITHOUT ABRUPT EDGES AT THE LOWER FRONT EDGE OF NOSING WITH NOSING PROJECTING NO MORE THAN 1 1/2" PAST FACE OF RISER.
5. CLOSED RISERS: SHALL BE SUFFICIENTLY SOLID TO PREVENT PASSAGE OF OBJECTS LARGER THAN 1/4" MAXIMUM DIMENSION.

20 ELEVATORS

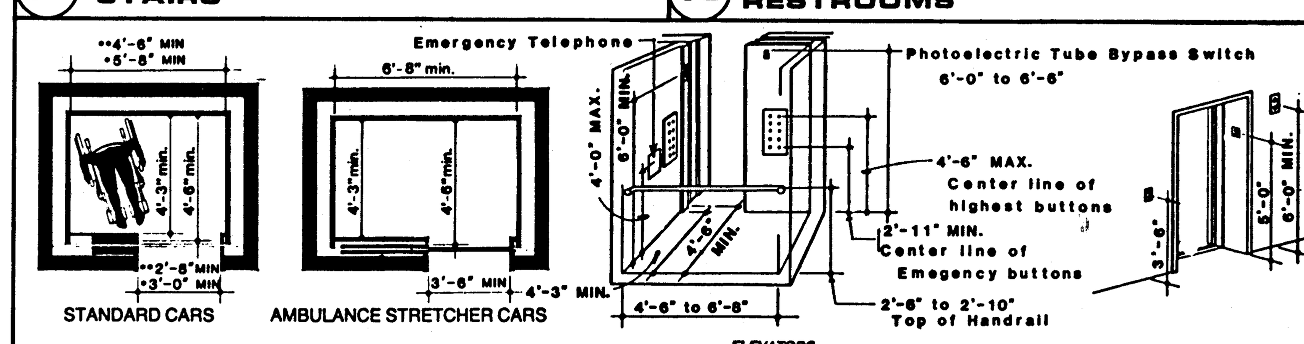

1. PASSENGER ELEVATORS ARE REQUIRED TO STOP WITHIN 1/2 INCH OF THE FLOOR LEVEL AND TO BE MAINTAINED LEVEL UNDER NORMAL LOADING AND UNLOADING CONDITIONS.
2. IN BUILDINGS WITH MORE THAN THREE STORIES, WHERE ELEVATORS ARE PROVIDED, AND IN ALL BUILDINGS WHERE ELEVATORS ARE REQUIRED BY TABLE 33A IN THE UNIFORM BUILDING CODE, EVERY FLOOR IS REQUIRED TO HAVE ACCESS TO AT LEAST ONE ELEVATOR WHICH WILL ACCOMMODATE AN AMBULANCE STRETCHER (78 X 22 IN.) IN ITS HORIZONTAL POSITION.
3. CLEAR MINIMUM INTERIOR CAB DIMENSIONS ARE REQUIRED TO BE 80 INCHES WIDE BY 51 INCHES DEEP WITH A 42 INCH CLEAR SIDE DOOR OPENING. CENTER OPENING DOORS HAVE BEEN PERMITTED WHERE IT CAN BE SHOWN THAT A STRETCHER COULD BE ACCOMMODATED.
4. PASSENGER ELEVATORS SERVING AREAS WHICH HAVE AN OCCUPANT LOAD OF MORE THAN 50 PERSONS ARE REQUIRED TO HAVE A CLEAR INTERIOR SIZE OF 68 INCHES WIDE BY 51 INCHES DEEP WITH A 36 INCH CLEAR SIDE DOOR OPENING. WHEN IT CAN BE DEMONSTRATED THAT A WHEELCHAIR CAN ENTER AND TURN AROUND WITHIN THE ELEVATOR CAB, ALTERNATIVE SIZES AND ENTRIES WILL BE PERMITTED.
5. PASSENGER ELEVATORS SERVING AREAS WHICH HAVE AN OCCUPANT LOAD OF NOT MORE THAN 50 PERSONS ARE REQUIRED TO HAVE A CLEAR INTERIOR SIZE OF 54 INCHES WIDE BY 54 INCHES DEEP FROM THE REAR WALL TO THE INSIDE FACE OF THE DOOR.
6. HANDRAIL PASSENGER ELEVATORS (NORMAL SIZE) ARE REQUIRED TO HAVE AT LEAST ONE HANDRAIL LOCATED 30 TO 34 INCHES ABOVE THE FLOOR.
7. PASSENGER ELEVATOR CAR CONTROLS ARE REQUIRED TO BE RAISED AND TO HAVE A MINIMUM DIMENSION OF 3/4 INCHES. HEAT ACTIVATED CONTROL BUTTONS ARE NOT ALLOWED. CONTROL BUTTONS ARE REQUIRED TO BE DESIGNATED BY A MINIMUM OF 5/8 INCH HIGH RAISED ARABIC NUMERALS, BRAILLE SYMBOLS, STANDARD ALPHABET CHARACTERS, OR STANDARD SYMBOLS LOCATED IMMEDIATELY TO THE LEFT OF THE CONTROL BUTTONS. THE RAISED CHARACTERS ARE TO BE ON A CONTRASTING BACKGROUND. CONTROLS AND EMERGENCY EQUIPMENT IDENTIFIED BY RAISED SYMBOLS INCLUDE, BUT ARE NOT LIMITED TO, DOOR OPEN, DOOR CLOSE, ALARM BELL, EMERGENCY STOP, AND TELEPHONE.

21 HAZARDS

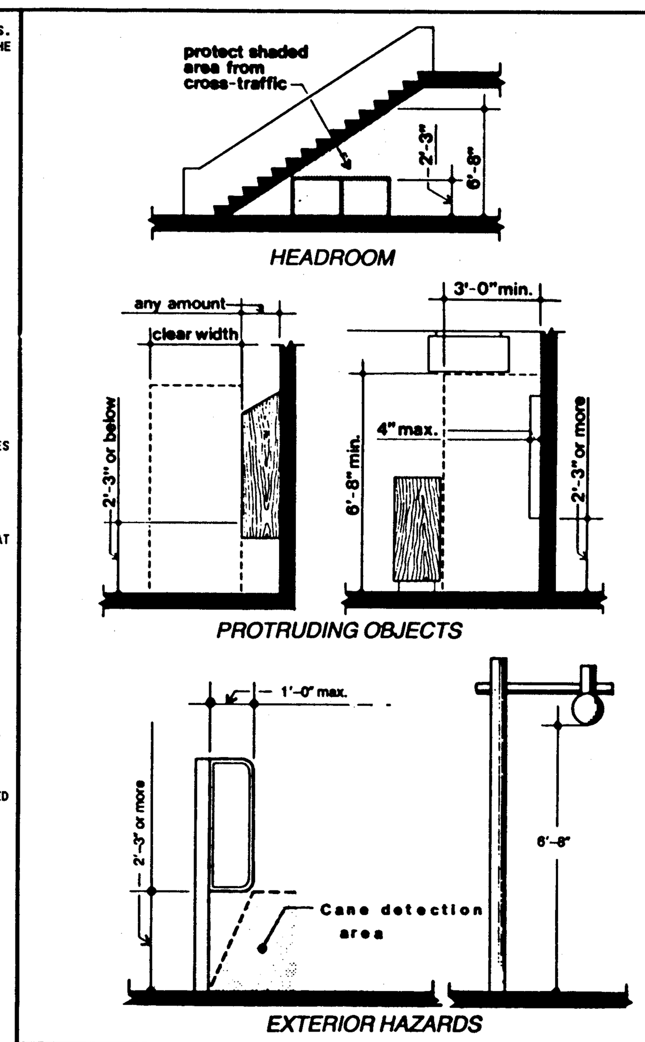

1. OVERHANGING OBSTRUCTIONS. ANY OBSTRUCTION THAT OVERHANGS A ROUTE BY WHICH A PEDESTRIAN MAY PASS IS REQUIRED TO BE AT LEAST 80 INCHES ABOVE THE WALKING SURFACE AS MEASURED TO THE BOTTOM OF THE OBSTRUCTION.
2. PROTRUDING OBJECTS.
A. OBJECTS WITH THEIR LEADING EDGES BETWEEN 27 INCHES AND 80 INCHES FROM THE WALK CANNOT PROTRUDE MORE THAN 4 INCHES INTO WALKS OR SIDEWALKS.
B. OBJECTS WITH THEIR LEADING EDGES WITHIN 27 INCHES OF THE WALK MAY PROTRUDE ANY DISTANCE, BUT MAY NOT REDUCE THE REQUIRED CLEAR SPACE OR MANEUVERING SPACE FOR A WHEELCHAIR.
C. FREE STANDING OBJECTS ON POSTS OR PYLONS MAY OVERHANG 12 INCHES FROM 27 INCHES TO 80 INCHES ABOVE THE WALK.

22 EXISTING TOILET COMPARTMENTS

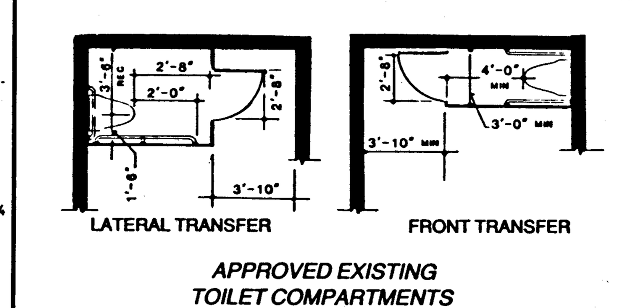

EXISTING CONSTRUCTION MUST MEET THE SAME REQUIREMENTS AS NEW CONSTRUCTION. WHERE UNREASONABLE HARDSHIP IS GRANTED, EQUIVALENT FACILITATION MAY BE PROVIDED. WHEN EQUIVALENT FACILITATION IS USED, THE FOLLOWING GUIDELINES APPLY:

1. ALL SANITARY FACILITY ARE NOT REQUIRED TO COMPLY WITH THESE REGULATIONS WHEN THE ENFORCING AGENCY AGREES THAT ACCESSIBLE SANITARY FACILITIES ARE WITHIN A REASONABLE DISTANCE OF THE ACCESSIBLE AREAS.
2. LATERAL AND FRONT TRANSFER STALLS AS INDICATED ARE ACCEPTABLE FOR EQUIVALENT FACILITATION.
3. EQUIVALENT FACILITATION WILL ALLOW DOORS TO TOILET ROOMS TO HAVE A CLEAR UNOBSTRUCTED OPENING OF 30 INCHES.

IN EXISTING BUILDINGS A SINGLE ACCOMMODATION TOILET FACILITY MAY HAVE THE WTAER CLOSET FIXTURE LOCATED IN A COMPARTMENT WHICH PROVIDES A CLEAR SPACE OF 36 INCHES WIDE BY 48 INCHES LONG IN FRONT OF THE WATER CLOSET.

23 CHECKLIST

THE FOLLOWING CHECKLIST IS INTENDED AS A QUICK REFERENCE TO THE BASIC REQUIREMENTS. IT HAS BEEN SIMPLIFIED FOR EASY USE FOR TYPICAL SITUATIONS AND DOES NOT INCLUDE THE CONDITIONS FOR USE OF THE EXCEPTIONS.

GENERAL CONSIDERATIONS

WHEELCHAIR DIMENSIONS
LENGTH: 3'-6" (42 INCHES).
WIDTH: 2'-3" (27 INCHES).
HEIGHT OF SEAT FROM FLOOR: 16 1/2 INCHES.
HEIGHT OF ARMREST FROM FLOOR: 2'-5" (29 INCHES).
HEIGHT OF PUSHER HANDLES FROM FLOOR: 3'-0" (36 INCHES).
CLEAR FLOOR SPACE APPROACH TO FACILITIES: 2'-6" BY 4'-0".
TURNING SPACE (180 AND 360 DEGREES): 5'-0" (60 INCHES) DIAMETER.

REACH FROM A WHEELCHAIR.
HIGH FORWARD: 4'-0".
HIGH SIDE: 4'-6".
LOW SIDE: 9 INCHES.

INDIVIDUALS ON CRUTCHES
DISTANCE BETWEEN CRUTCHES: 2'-8" (32 INCHES).

SITE ACCESS

GENERAL
ACCESS TO SITE AND PRIMARY BUILDING ENTRANCES WITHOUT STEPS OR ABRUPT CHANGES IN LEVEL.

SIDEWALKS
WIDTH: 4'-0".
MAXIMUM SLOPE: 1:20.
LANDINGS: PROVIDE 5'-0" LONG LANDINGS A MINIMUM OF EVERY 400 FEET AT SIDEWALKS WITH CONTINUOUS SLOPES.
CURB CUT WIDTH: 4'-0".
NO CHANGE IN LEVEL EXCEEDING 1/2 INCH.

RAMPS
MAXIMUM SLOPE: 1:12.
RAMP LANDINGS PROVIDED: MAXIMUM EVERY 30 FEET, DEPENDENT UPON SLOPE.
HANDRAILS REQUIRED: FOR SLOPES EXCEEDING 1:15.
GUIDE RAILS OR 2" CURBS PROVIDED.

EXTERIOR STAIRS
PAINTED TREADS AND UPPER APPROACH: 2 INCH WIDE CONTRASTING STRIPE AT NOSING.

WARNING CURBS
PROVIDE 6 INCH CURB AT ADJACENT CHANGES IN LEVEL EXCEEDING 4 INCHES.
WARNING CURBS ARE NOT REQUIRED AT STREET CURBS OR IF A GUIDERAIL IS PROVIDED AT 2 TO 4 INCHES ABOVE WALK.

GRATINGS
MAXIMUM OPENINGS IN DIRECTION OF TRAVEL: 1/2 INCH.

PARKING
WIDTH: 9'-0".
LENGTH: 18'-0".
MAXIMUM SLOPE OF SPACE: 1/4 INCH PER FOOT.
ADJACENT CLEAR SPACE WIDTH: 5'-0".
WHEELCHAIR ACCESS PROVIDED TO WALKS WITHOUT GOING BEHIND PARKED CARS.

PARKING STRUCTURES
ENTRANCE HEIGHT: 8'-2".
HEIGHT TO ACCESSIBLE PARKING: 8'-2".

SIGNAGE
SIGNS PROVIDED AT ACCESSIBLE PARKING SPACE.
SIGNS PROVIDED TO INDICATE ACCESSIBLE ENTRIES AT EXISTING BUILDINGS WHERE NOT THE PRIMARY ENTRY.

BUILDING ACCESS

ENTRANCE
ALL PRIMARY ENTRANCES ACCESSIBLE.
LEVEL SPACE AT OUTSWINGING DOORS: 5'-0".
SPACE PROVIDED AT STRIKE SIDE OF OUTSWINGING EXTERIOR DOORS: 2'-0".
LEVEL SPACE AT INSWINGING DOORS: 3'-8".
WIDTH: 2'-8" CLEAR OPENING (3'-0" DOOR).
DOUBLE DOORS WIDTH: ACTIVE LEAF 2'-8" CLEAR OPENING.
UNINTERRUPTED SPACE AT DOOR BOTTOM: 10".
NO REVOLVING DOORS ALLOWED FOR ACCESSIBLE DOORS.

DOORS
LEVEL SPACE ON SWING SIDE: 5'-0".
LEVEL SPACE ON SIDE AWAY FROM SWING: 3'-8".
SPACE PROVIDED ON STRIKE SIDE OF INTERIOR DOOR, SWING SIDE: 1'-6".
WIDTH: 2'-8" CLEAR OPENING (3'-0" DOOR).
HEIGHT: 6'-8".

HARDWARE
OPERABLE BY A SINGLE EFFORT, NO GRASPING OR WRIST MOVEMENT (LEVERS, PUSH-PULLS, OR PANIC DEVICES).
ALLOWABLE CLOSER PRESSURE:
INTERIOR DOORS: 5 POUNDS.
EXTERIOR DOORS: 8.5 POUNDS.
FIRE DOORS: 15 POUNDS.

THRESHOLDS
MAXIMUM HEIGHT (RECOMMENDED): 1/2 INCH WITH AMXIMUM VERTICAL CHANGE OF 1/4 INCH.

FLOORS
SLIP-RESISTANT SURFACE.

CORRIDORS
WIDTH: 3'-8" MINIMUM.
AISLES: 3'-0" MINIMUM.

STAIRS
INDICATOR STRIPE AT APPROACH AND BOTTOM TREAD.
NOSINGS LESS THAN 1 1/2 INCH MAXIMUM RECOMMENDED, 3/8 INCH ROUNDED, 45 DEGREE BEVEL.

RAMPS
MAXIMUM SLOPE: 1:12.
RAMP LANDINGS PROVIDED: MINIMUM EVERY 30 FEET DEPENDENT UPON SLOPE.
HANDRAILS REQUIRED: SLOPES EXCEEDING 1:15.

HANDRAILS
HANDRAIL HEIGHTS: 2'-6" TO 2'-10".
HANDRAIL EXTENSION AT TOP (REQUIRED): 6 INCHES.
HANDRAIL EXTENSION AT TOP (RECOMMENDED): 1'-0".
HANDRAIL EXTENSION AT BOTTOM (REQUIRED): 6 INCHES.
HANDRAIL EXTENSION AT BOTTOM (RECOMMENDED): 1'-0" PLUS ONE TREAD WIDTH.

GUIDERAILS
WHERE ADJACENT CHANGES IN LEVEL EXCEED 4 INCHES, PROVIDE GUIDERAILS 2 INCHES TO 4 INCHES ABOVE FLOOR.
GUIDERAILS ARE NOT REQUIRED WHERE A 6 INCH CURB IS PROVIDED.

ELEVATORS
WIDTH:
AMBULANCE STRETCHER TYPE: 6'-8".
50 OR MORE OCCUPANTS: 5'-8".
LESS THAN 50 PERSONS: 4'-6".
CAR DEPTH: 4'-3" TO FRONT WALL, 4'-6" TO DOOR.
DOOR:
AMBULANCE STRETCHER TYPE: 3'-6".
50 OR MORE OCCUPANTS: 3'-0".
LESS THAN 50 PERSONS: 2'-10".
PROVIDE AT LEAST ONE HANDRAIL: 2'-6" TO 2'-10" ABOVE FLOOR.
HIGHEST ALLOWABLE CONTROLS: 4'-6".
LOWEST ALLOWABLE CONTROLS (EMERGENCY BUTTONS): 2'-11".
EMERGENCY PHONE: MAXIMUM 4'-0" HIGH, MINIMUM 2'-5" CORD.
HALL CALL BUTTONS: CENTERED AT 3'-6".
HALL LANTERNS: 6'-0" ABOVE FLOOR, VISUAL AND AUDIBLE.
FLOOR INDICATORS: 2 INCH HIGH LETTERS, INCLUDING BRAILLE, ON DOOR CASINGS, 5'-0" ABOVE FLOOR.

SPECIAL ACCESS LIFTS
MAXIMUM TRAVEL: 5'-0".
MINIMUM CAPACITY: 400 POUNDS.
PLATFORM SIZE: 2'-6" BY 4'-0".
MAXIMUM SPEED: 20 FPM.
PROVIDE KEY CONTROLS IF LIFT TRAVEL AREA IS NOT ENCLOSED.

CONTROLS FOR LIGHTS, WINDOWS, TEMPERATURE CONTROLS, ETC.
HEIGHT: MAXIMUM 4'-0", MINIMUM 3'-0".
WALL OUTLETS: 1'-0" ABOVE FLOOR EXCEPT AT RELOCATABLE PARTITIONS, AND WINDOW WALLS.

HAZARDS
OVERHEAD OBSTRUCTIONS: 6'-8".
PROJECTIONS: MAXIMUM 4 INCHES IF OVER 2'-3" ABOVE FLOOR.
PROVIDE TEXTURED PATH WHEN OBSTRUCTIONS ARE IN THE PATH OF TRAVEL.
EMERGENCY SIGNALS: AUDIBLE AND VISUAL.
WHERE LIGHTED EXIT SIGNS ARE USED, THEY SHALL FLASH IN AN EMERGENCY.

FACILITIES ACCESS

MULTIPLE ACCOMMODATION TOILETS
ENTRANCE DOOR TO ROOM: 2'-8" CLEAR (3'-0" DOOR).
SPACE AT DOOR SWING SIDE: 5'-0".
SPACE AT DOOR AWAY FROM SWING: 3'-8".
WHEELCHAIR TURNING SPACE PROVIDED: 5'-0" DIAMETER, OR 4'-8" BY 5'-3".
ACCESSIBLE PATH TO ACCESSIBLE TOILET COMPARTMENT: 3'-0".

TOILET COMPARTMENTS
SIGNAGE: EQUILATERAL TRIANGLE (1'-0" SIDE) FOR MEN'S ROOM, 1'-0" DIMATER CIRCLE FOR WOMEN'S ROOM.
SPACE IN FRONT OF DOOR: 4'-0" CLEAR.
DOOR WIDTH (FRONT ENTRY): 2'-8" CLEAR, DOOR SWINGS OUT.
DOOR WIDTH (SIDE ENTRY): 2'-10" CLEAR, DOOR SWINGS OUT.
COMPARTMENT WIDTH: 4'-10" MINIMUM DEPENDENT UPON WATER CLOSET.
COMPARTMENT DEPTH (FRONT ENTRY): 6'-2" TO 6'-6" DEPENDENT UPON WATER CLOSET.
COMPARTMENT DEPTH (SIDE ENTRY): 7'-2" TO 7'-6" DEPENDENT UPON WATER CLOSET.
CLEAR SPACE AT SIDE OF WATER CLOSET: 2'-8" MINIMUM.
NEAR WALL TO CENTER OF WATER CLOSET: 1'-6" RECOMMENDED.
TOILET SEAT HEIGHT: 1'-5" TO 1'-7" HIGH.
REAR GRAB BAR: 3'-0".
SIDE GRAB BAR: 4'-0", 2'-0" AEXTENSION IN FRONT OF WATER CLOSET.
GRAB BAR HEIGHT: 2'-9" ABOVE FLOOR.
TOILET PAPER HOLDER: 1'-0" MAXIMUM IN FRONT OF WATER CLOSET.
TYPICAL WATER CLOSET SIZES:
WIDTH: 1'-3" TO 1'-4" TYPICAL.
LENGTH: 2'-2" TO 2'-4" TYPICAL; 2'-0" TO 2'-7" AVAILABLE.

SINGLE ACCOMMODATION TOILETS
DOORS SHALL LOCK FROM INSIDE.
ONE PERSON USE AT A TIME.
SPACE INSIDE: ROOM FOR A WHEELCHAIR TO ENTER AND DOOR TO CLOSE; 4'-0" CLEAR IN FRONT OF WATER CLOSET.
CLEAR SPACE AT SIDE OF WATER CLOSET TO LAVATORY: 2'-4".
CLEAR SPACE AT SIDE OF WATER CLOSET TO WALL: 2'-8".
NEAR WALL TO CENTER OF WATER CLOSET: 1'-6".

URINALS
PROVIDE AT LEAST ONE AT NO MORE THAN 1'-5" FROM FLOOR TO LIP.

LAVATORIES
HEIGHT: 2'-9" TO 2'-10" RECOMMENDED.
CLEAR SPACE IN FRONT: 2'-6" BY 4'-0".
CLEAR SPACE BENEATH: 2'-5" HIGH, 2'-6" WIDE, 8 INCHES DEEP AT TOP, 1'-5" DEEP AT BOTTOM 9 INCHES.
CONTROL TO BE LEVER, PUSH-BUTTON, OR SIMILAR TYPE.

BATHTUBS
CLEAR SPACE AT SIDE: MINIMUM 4'-0".

SHOWERS
WIDTH: 3'-6".
DEPTH: 4'-0".
ENTRY: 3'-0".
GRAB BARS: 2'-0" BY 3'-0" ON SIDE WALL AND WALL OPPOSITE SEAT.
SEAT: 1'-6" ABOVE FLOOR.
DRAIN: WITHIN 6 INCHES OF BACK WALL.
CONTROLS TO BE LEVER, PUSH-BUTTON, OR SIMILAR TYPE.
CONTROL HEIGHT: 3'-4".
HOSE: 5'-0" LONG.

MULTIPLE SHOWERS
PROVIDE IN A CORNER LOCATION WITH SEAT, GRAB BARS, CONTROLS.
WHERE TWO OR MORE, PROVIDE ONE LEFT HAND AND ONE RIGHT HAND.

ACCESSORIES
ACCESSORIES HEIGHTS: 3'-4", AT LEAST ONE OF EACH TYPE ACCESSIBLE.
MIRRORS: BOTTOM EDGE 3'-4" MAXIMUM FROM FLOOR.
TOILET PAPER HOLDER: MAXIMUM 1'-0" IN FRONT OF WATER CLOSET.

DRINKING FOUNTAINS
PROVIDE IN AN ALCOVE OR OUT OF PATH OF TRAVEL.
ALCOVE WIDTH: 2'-8" CLEAR.
ALCOVE DEPTH: 1'-6".
CLEAR SPACE BENEATH FOUNTAIN: 2'-3".
BUBBLER HEIGHT: 2'-9".
CONTROLS: MAXIMUM 6" FROM FRONT.
CONTROLS TO BE LEVER, PUSH-BUTTON, OR SIMILAR TYPE.

PUBLIC TELEPHONES
HEIGHT TO CONTROLS: 4'-6" MAXIMUM DEPENDING ON APPROACH.
CLEAR SPACE BENEATH: 2'-3" CLEAR HEIGHT, 1'-7" MAXIMUM DEPTH FOR SIDE APPROACH.
WIDTH OF ALCOVE OR BOOTH: 2'-8" FOR FRONT APPROACH.
CLEAR FLOOR SPACE: 2'-6" BY 4'-0" IN FRONT OR BESIDE.

TITLE 24 ... IDENTIFICATION STAMP
APR 4 1991
Structural Safety Section

KLASSEN CORPORATION
Architecture
Planning
Construction
2021 Westwind Drive
Bakersfield, CA 93301
(805) 327-0875
(805) 327-5933 Fax

The above drawings and specifications and the ideas, designs and arrangements represented thereby are and shall remain the property of the architect; and no part thereof shall be copied, disclosed to others or used in connection with any work or project other than the specific project for which they have been prepared and developed without the written consent of the architect. Visual contact with these drawings or specifications shall constitute conclusive evidence of acceptance of these restrictions. Written dimensions on these drawings shall have precedence over scaled dimensions; contractors shall verify and be responsible for, all dimensions and conditions on the job and this office must be notified of any variations from the dimensions and conditions shown by these drawings. Shop details must be submitted to this office for approval before proceeding with fabrication.

BAKERSFIELD CITY SCHOOL DISTRICT
COLONEL HOWARD NICHOLS ELEMENTARY SCHOOL
MODERNIZATION PROJECT

Sheet title: HANDICAP DETAIL SHEET

COLONEL HOWARD NICHOLS ELEMENTARY SCHOOL
3401 RENEGADE AVENUE
BAKERSFIELD, CALIFORNIA

Date:	Issued for:
2/11/91	O.S.A. Submittal
4/4/91	O.S.A. Backcheck

Date:	Revisions:

Drawn by:
Checked by:
Job no: 1912
Sheet: A 7
Sheet of: 8
Date: APRIL 4, 1991