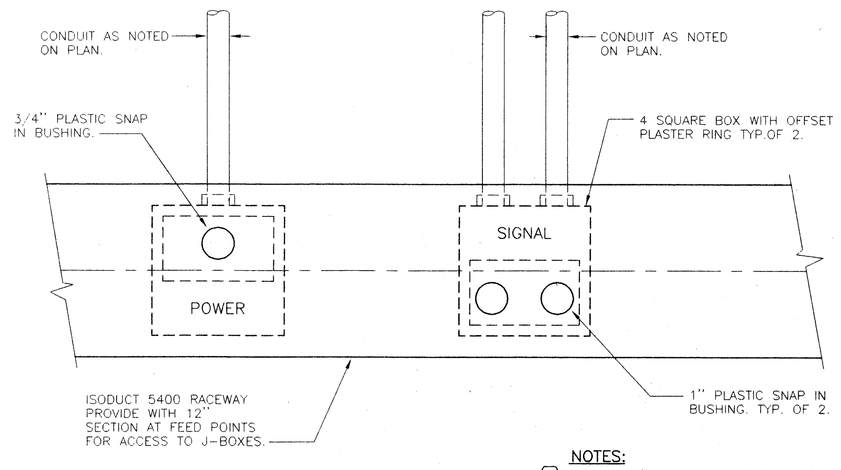

NOTES:

1. PROVIDE 8" LOOP OF CABLES \ CONDUCTORS AT FEED POINTS.
2. MOUNT RACEWAY 34" FROM FINISH FLOOR TO BOTTOM OF RACEWAY (TYPICAL)

TYPICAL ISODUCT RACEWAY

NOT TO SCALE — 1 / E6.00

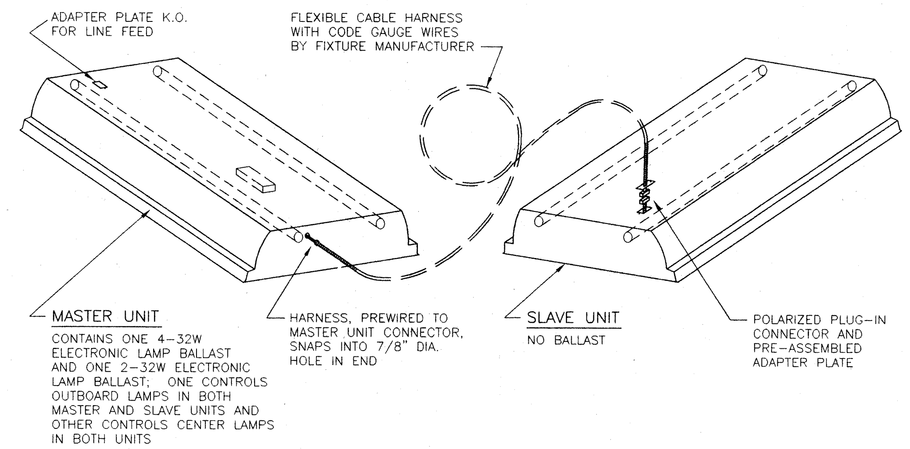

MASTER/SLAVE LIGHTING TANDEM WIRING

NO SCALE — 4 / E6.00

FIXTURE SCHEDULE

TYPE	DESCRIPTION	LAMP	MTG.	VOLTAGE	REMARKS
A	COLUMBIA # 5PS24-232G-FSKSH12-125-4EB8LH-MS11	2F32 T8 35K	RECESSED	120V	SEE DETAILS
A1	COLUMBIA # 5PS24-232G-FSKSH12-125-4EB8LH	2F32 T8 35K	RECESSED	120V	SEE DETAILS
B	COLUMBIA # MWN4-232-EB8LH	2F32 T8 35K	SURFACE	120V	SEE DETAILS
C	PRESCOLITE # 9464-60	1/60 INC.	SURFACE	120V	
D	COLUMBIA # MWW4-332-EB8LH	3F32 T8 35K	SURFACE	120V	
F	COLUMBIA # PM44-832-FSKSH12-187-4EB8LH	8F32 T8 35K	SURFACE	120V	'EM' DENOTES FACTORY INSTALLED, BATTERY PACK
G	KIRLIN # RS91166-13-26	2F32 TRT	RECESSED	120V	
H					
X	PRESCOLITE #EDX4R-LED-G1	LED INCLUDED	WALL	120V	'EM' DENOTES FACTORY INSTALLED, BATTERY PACK

Item (12) Refer to Electrical Drawings, Sheet E4.01, Specifically "Fixture Schedule":

The following substituted light fixtures have been reviewed and deemed an acceptable substitution with modifications (if any) as noted:

Fixture Type A: Lithonia #25PG232A12125120GEBLST11PAF with KSH K12-125 lens, ≤10% THD electronic ballast, spring loaded door latches.

Fixture Type A1: Lithonia #25PG232A12125120GEBLST11PAF with KSH KR-125 lens, ≤10% THD electronic ballast, spring loaded door latches.

Fixture Type B: Lithonia #AW232120GEB with injection molded lens ≤10% THD electronic ballast.

Fixture Type C: Progress lighting #P3524-60.

Fixture Type D: Lithonia #AW332120GEB with injected molded lens, ≤ 10% THD electronic ballast.

Fixture Type F: Lithonia #4MB32FWA19120GEB with die-formed code guage steel (in writing from faculty) KSH KR-125 lens, ≤ 10% THD electronic ballast.

Fixture Type G: Lithonia #LAF 2/32TRT 125BT73120.

Fixture Type X: Lithonia #LHQM SWIG 120/277N.

Item (12) Refer to Electrical Drawings, Sheet E4.01, specifically "Fixture Schedule":

The following substituted light fixtures have been reviewed and deemed an acceptable substitution:

Fixture Type A: Metalux #M/S-2GCXF - 232KSHA125 - 120V - TEB81 - PAF.
Fixture Type A1: Metalux #2GCXF - 232KSHA125 - 120V - TEB81 - PAF.
Fixture Type B: Metalux #SA-232IMA - 120V - TEB81.
Fixture Type D: Metalux #SA-332IMA - 120V - TEB81.
Fixture Type F: Metalux #4VRM - 832KSHA187 - 120V - TEB82 - PAF.
Fixture Type G: Devine D420 - (2) PLT32 - ELB - A65 - 120V - TP
Fixture Type X: Sure-Lites #LPX70GWHDH.

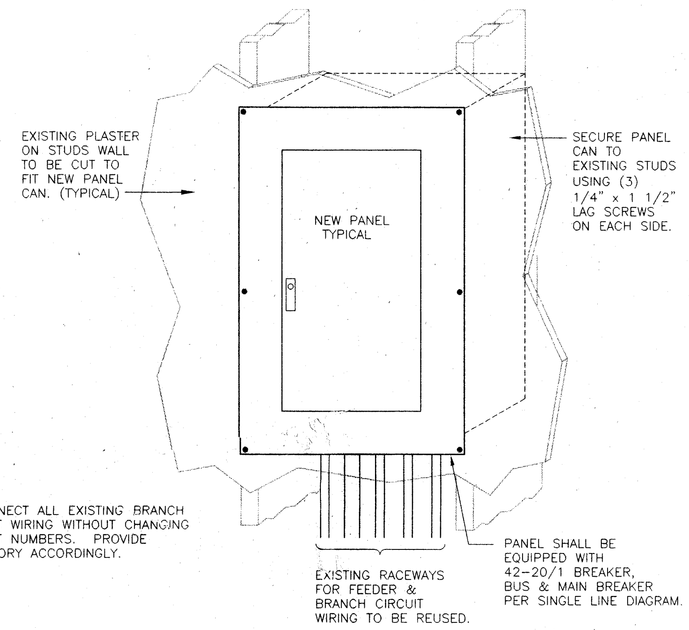

PANEL MOUNTING DETAIL

NO SCALE — 2 / E6.00

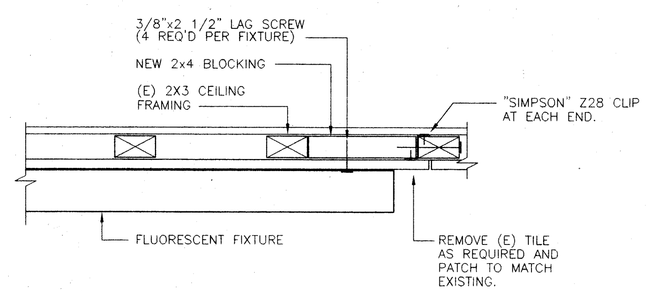

SURFACE FIXTURE MOUNTING DETAIL AT EXISTING CEILING

NO SCALE — 5 / E6.00

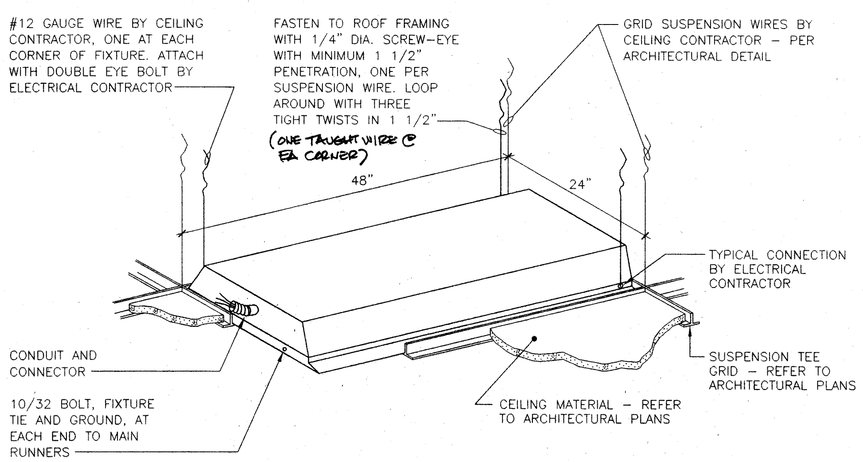

RECESSED FIXTURE MOUNTING DETAIL

NO SCALE — 3 / E6.00

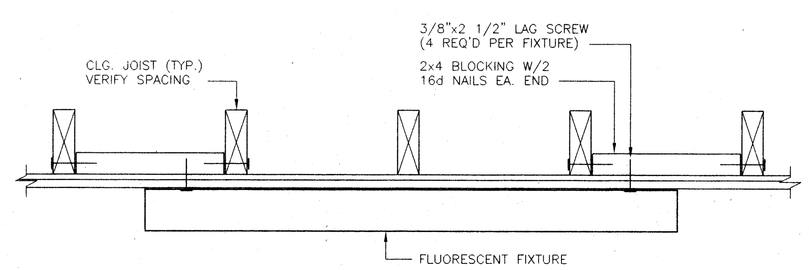

SURFACE FIXTURE MOUNTING DETAIL

NO SCALE — 6 / E6.00

bfgc

OCT 07 1998 W.T.

REGISTERED PROFESSIONAL ENGINEER JAMES W. GRAHAM No. 5101 09/30/02 Electrical Engineer STATE OF CALIFORNIA

INTERSTATE ENGINEERING ESTABLISHED 1968
466 W. Fallbrook Ave., Suite 106
Fresno, California 93711
(209) 432-4490 / (209) 432-4494 fax
James W. Graham, Electrical Engineer
E.E. #5101

bfgc architects planners inc.
bakersfield
5500 ming avenue, suite 450, bakersfield, ca. 93309-4631
805 836-4300 fax 805 836-4311

san luis obispo
3211 broad street, suite 113
san luis obispo, california 93401
805 546-0433

san jose
160 west santa clara st., suite 525
san jose, california 95113
408 924-0841

principal architects
david r. cartnal, a.i.a., C-8564 dean a. tatsuno, a.i.a., C- 9190
frank a. ghezzi, a.i.a., C-3132 bruce m. biggar, a.i.a., C-23134
mark engelian, a.i.a., C-8021 brad a. henderson, a.i.a., C-10901
william r. tuculet, a.i.a., C-8702 richard l. mello, a.i.a., C-18079

FEB 24

HORT SCHOOL MODERNIZATION

BAKERSFIELD CITY SCHOOL DISTRICT

2301 PARK DRIVE
BAKERSFIELD, CA. 93306

FIRE ALARM SINGLE LINE AND CALCULATIONS

job no.	97-276
date	MAY 12, 98
drawn by	C.A.
chk'd by	J.W.G.
copyright	1997

E 4.01

PLOT DATE: 10-05-98 (PS=36)