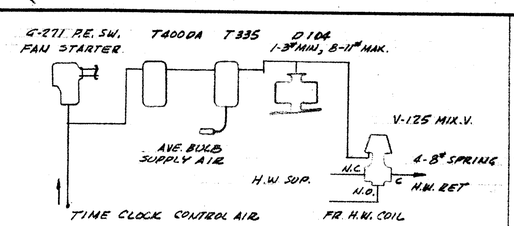

TYPICAL UNIT VENTILATOR CONTROL (12 REQ'D)
(10 CLASSRMS ; 1 WK.RM ; 1 ADMIN.-OFFICE)

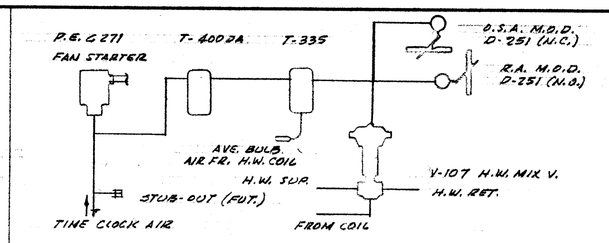

KINDERGARTEN "AIR FLOOR" CONTROL (1 REQ'D.)

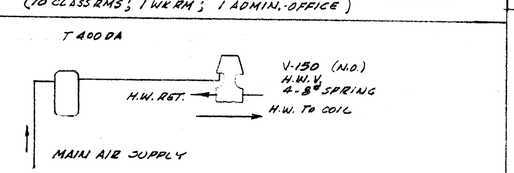

TYPICAL FREE CONVECTOR HEATER - 4 REQ'D.
ADMINISTRATION - UNIT-C.

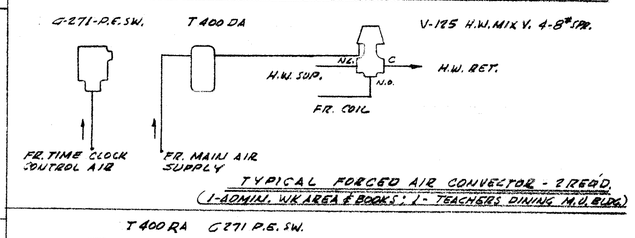

TYPICAL FORCED AIR CONVECTOR - 2 REQ'D.
(1-ADMIN. WK AREA & BOOKS ; 1 - TEACHERS DINING M.U. BLDG.)

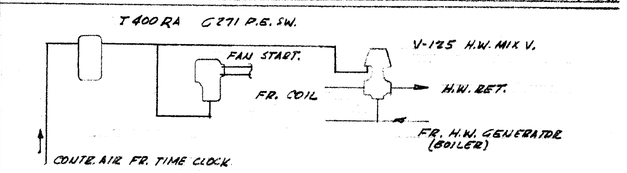

KITCHEN "WARM-UP" HEATER UNIT - 1 REQ'D.

1. ALL PNEUMATIC TUBING TO BE TYPE L OR K COPPER, WITH SILVER SOLDERED JOINTS, WROUGHT COPPER SOLDER TYPE FITTINGS. TEST @ 50 PSIG AIR COMPRESSOR PRESSURE
2. PNEUMATIC TUBING INSTALLED BELOW GRADE SHALL BE IRON PIPE "POLY-ETHYLENE" FLEXIBLE SHEATHING OR APPROVED EQUAL, SHEATHING SHALL BE BROUGHT UP TO 1'-6" MIN. ABV GRADE.
3. PNEUMATIC TUBING INSTALLED BENEATH CONCRETE AREAS TO BE SHEATHED IN FULL INTERVAL LENGTHS OF PROTECTIVE SHEATHING WITHOUT SHEATHING UNITS OR CONNECTIONS. SHEATHING TO BE OF APPROVED WALL THICKNESS & DIAMETER.
4. CONTROLS CONTRACTOR TO SUBMIT 5 COPIES OF SYSTEM TO ARCHITECT FOR APPROVAL WITHIN 30 DAYS AFTER CONTRACT NEGOTIATIONS.

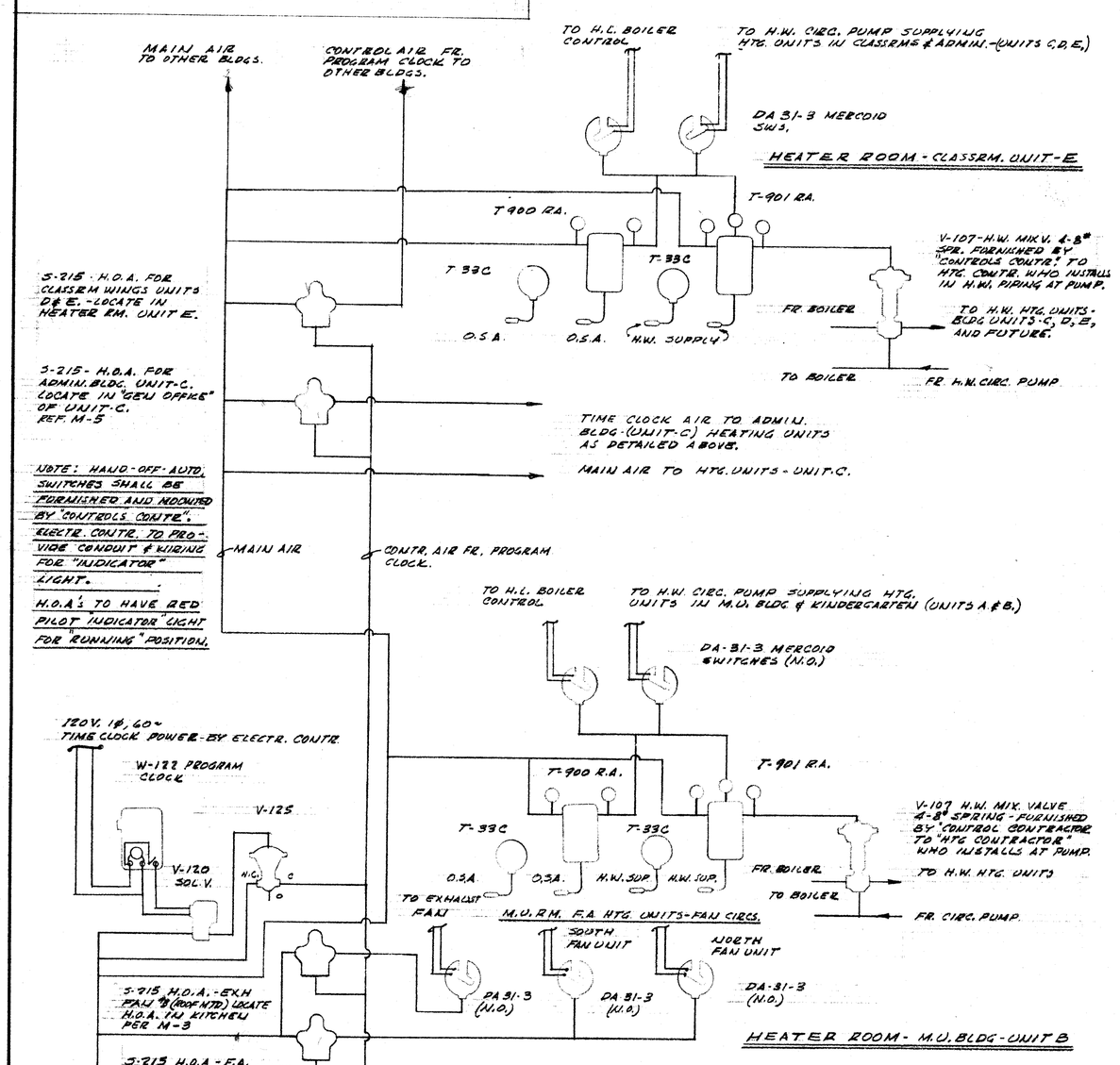

SCHEMATIC PNEUMATIC CONTROL DIAGRAM

EQUIPMENT SPECIFICATIONS

ITEM	QUANT.	DESCRIPTION
UNIT D - REF. M-6 & M-7 CLASSROOM WING.		
HEATING & VENT.		
UNIT VENTILATOR #1 (EA. CLASSRM)	6	PER "WERMAN NELSON" MOD. 3360 J CC - GSU. PURCHASE, 22" HIGHT, 19 3/8" x 33" x 1/4" WATER LOUVER, BRONZE - 44 MBH. @ 140°F. AVE HOT W. TEMP. TOTAL RATED OUTPUT, 253% DA. - 750 CFM STD AIR DELIVERY, 1/8 HP FAN MOTOR. UNIT TO BE COMPLETE WITH FILTER AS FURNISHED W/UNIT, COLOR SELECTION TO BE BY ARCHITECT. CONTROL TO BE ACCORDING TO INTEGRATED "CONTROL SYSTEM" PER THIS SHT. M-8. H.W. RATE 5-7GPM.
UNIT VENTILATOR #2 (TEACHER'S MODEL RM.)	1	PER "WERMAN NELSON" MOD. "B" "AMER VENT" BC-2110, 16 MBH @ 160°F. EATERING H.W., 70°AT, 2 GPM, 500 CFM STD AIR, 18" H EXCIT V, 39" L., W/1'-1 1/2" O.A. WALL LOUVRE - BRONZE 1/4 HP., DUPLEX W/AIR FILTER AS SUPPLIED W/UNIT. COLOR BY ARCHITECT'S SELECTION. CONTROLS PER INTEGRATED "CONTROL SYSTEM - THIS SHT. M-8.
PLUMBING - M-6 & M-7		
WATER CLOSETS #1 W.C. #1	9	PER "AMER. STD." "MADERA", F-2223-8, EXPOSED FLUSH V. PER SLOAN ROYAL 110 FVV., 2500 - AWITER MOUNT, OPEN FRONT SEAT, FLOOR MTD. MOUNT FLUSH V. 1'-3 1/2" WITH CHROME SUPPLY WATER PIPE DW. TO CLOSET SPUD.
URINAL #1 UR #1	4 (BATTERY)	PER "AMER. STD." "CHINAL" F-6024-8 - BATTERY OF 4 URINALS W/F-6011-6" TRIM COVER, NO. 2 HIGH TANK F-4100-1 AUTOMATIC FLUSH AT INTERVALS, PER CONTROLS, 2-3130 SPARTAN 6 GAL FLUSHING CARTS, 2-3140 FLUSH PIPES FLOOR MTD.
URINAL #2 UR. #2	1	PER "AMER STD" "CHINAL" F-6000-1, SLOAN ROYAL FLUSH V., #3303 STRAINER, FLOOR MTD.
LAV. #1	2	PER "AMER STD." "LUCERNE" F-327-51, 20"x18", W/CHICAGO NO. 333 PUSH BOTTOM FAUCET ONLY, BLAIN-OFF H.W., CHICAGO NO. 441 LK 3/8" STOP, WALL HANGER.
WASH SINK #1	2	PER "AMER. STD." "CARLYSLE" P-8600-1, STEEL W/3 SINGLE DRILLED HOLES FOR 4" EQUALLY SPACED "CHICAGO" NO. 934 C.W. PUSH BOTTOM FAUCETS W/FAN REGULATOR, 1" OUTLET SOAP DISH, 6 FT LENGTH, 0" BACK, WALL HANGER.
CABINET SINK #1 (TEACHER WORK RM.)	1	PER "AMER. STD." "FLAT RIM", P-7020-4, 24"x16", ENAMELED C.I., CABINET-DRESS MTD., W/ "CHICAGO" NO. 50-10" GOOSE NECK SINGLE FANCY FOR H.& C.W., CHICAGO NO. 441 LK-3/8" STOPS, 2-ACID STRAINER - END OUTLET, TRAP.
SERVICE SINKS #1 S/S #1	2	PER "AMER. STD." "ARGO" P-7705-1, 24"x20", 12" BACK, #-5001 FAUCET, P-7798 TRAP W/C.O. & FLOOR FLANGE SUPPORT, WALL HANGER, RIM GUARD.
ELECTR. WATER HEATER #1 (JANITOR RM.)	1	PER. "CRANE" MOD A., EC 20-2, GLASS LINED, 20 GAL CAPACITY, 600W. LOWE'S, 1000W-UPPER ELEMENT, 120 V. 1Ø ELECTRIC, 1600 W. TOTAL. PROVIDE 3.0.U. AT INLET WATER SUPPLY # WATTS NO. 40L P-T. RELIEF V. AT OUTLET, SET @ 125°, 210°F. W/1/4" DISCH TO S/S.
FLOOR DRAIN F.D. #1 (TOILETS)	2	PER "JAY SMITH" NO. 100-B CAST IRON W/ NICKEL PLATED BRONZE TOP, W/C.I. 9" TRAP 3" OUTLET.
CLASSROOM CABINET SINKS #1 (EA. CLASSROOM)	5	PER "AMER. STD." P-7070-4, END OUTLET, 6" DEPTH, ENAMELED C.I., 24"x16", 2-ACID STRAINER, TRAP, CHICAGO NO. 34 GOOSE NECK FAUCET, E.W. ONLY, 10" HEIGHT, PLAIN END SPOUT, PROVIDE CHICAGO NO. 441 LK-3/8" STOP, CHICAGO NO. 748 C.W. BUBBLER, H.W. INTD. PER "POTTER ROEMER" MOD. 103 VXT, W/3/8" E.C.L. WATER, HAND TYPE, LIQUID EXTINGUISHER PRESSURED W/GAGE - TYPE 2A., BREAK GLASS DOOR W/LOCK, & SEAL, ESY.
UNIT E - REF M-6 & M-7 CLASSROOM WING. HEATING & VENT.		
UNIT VENTILATOR #1 (EA. CLASSROOM)	5	SAME AS UNIT V. #1 FOR UNIT-D CLASSROOMS
H.W. GENERATOR #1 (HEATER RM.)	1	PER "CYCLOTHERM" PACKAGED STEEL TUBE & TUBE SHEETS, FORCED DRAFT, 3-PASS, INTERNAL CONTROL - INTEGRATED W/CONTROL SYSTEM, GAS PILOT FLAME, AIMS, AGA, APPROVED, COMPLETE W/STRUCT BASE, FAN, BURNER, ADJUSTAT, HI-LIMIT, AIR SAFETY SWITCH, PRIME PAINT & METALLIC GREY, RATED @ 1,340 MBH BUT PUT, UNIT GAS FIRED, GAS PRESS REGULATOR, GAS SOLENOID V., RELIEF V., TEMP-ALT. V., INDICATED & ASSEMBLED FOR GAS & ELECT. HOOKUP, MOD. CM-14 1 1/2 HP FORCED DRAFT FAN, GAS PILOT.
CIRC. H.W. PUMP #1 (HEATER RM.)	1	PER "WEILMAN" MOD. 2KB-1, 1750 RPM, DIRECT COUPLED W/INTEGRAL STEEL BASE FOR ANCHOR BOLTING TO 8" HIGH CONCR. PUMP PAD, 150 GPM @ 50' HEAD, 3 HP MOTOR DRIVE, 3/8" 208V END SUCTION, TOP DISCH., SCREWED, CAST IRON CASE, BRONZE TRIM & IMPELLER, W/ MECHANICAL SEAL, SUPPLIED W/UNIT.
EXPANSION TANK (COMPRESSION)	1	AS INDICATED M-6 & ACCESSORIES NOTED.
PLUMBING M-6 & M-7		
WATER CLOSETS #1 (W.C. #1)	6	SAME AS PER UNIT-D - W.C. #1
URINAL #1 UR #1	4 (BATTERY)	SAME AS PER UNIT-D - UR. #1
SERVICE SINK #1 S/S #1	1	SAME AS PER UNIT-D - S/S #1
WASH SINK #1	2	SAME AS PER UNIT-D
FLOOR DRAIN #1 F.D. #1 (TOILET)	1	SAME AS PER UNIT-D - F.D. #1
FLOOR DRAIN #2 F.D. #2 (HTR. RM)	1	PER "JAY SMITH" NO. 263 W/SEDIMENT BUCKET 2" C.I. "P" TRAP
ELECTR. WATER HEATER #1 (JAN. RM.)	1	PER "GUCHNIVAR" JUNIOR, 3 1/2 GAL. STORAGE, MOD. LS-3, 1000 WATT, 120 V., 3/4" H & C.W., COMPS., MOUNT WITHIN CABINET IN JAN. RM. PROVIDE C.W. SHUT OFF VALVE & WATTS NO. 40L P.T. RELIEF V. ON H.W. OUTLET. PROVIDE W/ GLASS LINED TANK.
CLASSROOM CABINET SINKS #1 (EA. CLASSRM.)	6	DITTO UNIT "D" - PER "AMER STD" P-7020-4.
FIRE EXT. CAB. F.E.C. #1	2	DITTO UNIT "D" PER "POTTER ROEMER" 103 VXT.

EQUIPMENT SPECIFICATIONS

ITEM	QUANT.	DESCRIPTION
UNIT A - REF. M-7 KINDERGARTEN		
HEATING & VENT. F.A. HTG. UNITS #1	1	PER "AMERICAN BLOWER" MOD. 2V-9, 2000 CFM. @ 0.75" S.W.P., 1/2 HP MOTOR DRIVE W/ADJ. SHEAVE, MOTOR DRIVE @ LEFT SIDE WHEN FACING DISCHARGE AIR, HORIZONTAL, REF. C., SUSPENDED, 28 HOT WATER COIL WITH INLET & OUTLET CONNS @ RIGHT (WRONG) SIDE, TO MAN OUTPUT RATING @ 7 GPM @ 180°F INLET, 20°AT. PROVIDE COMPLETE W/ 2" THICK CLEANABLE MESH AIR FILTERS PER "AIR SAN" TYPE W.
AIR FLOOR PANS	1026 ±	PER "AIR FLOOR", 12"x12" - 24 GA. GALV. STL. W/26 GA. STL. BLANKING STRIPS AT SIDES.
R.A. GR. #1 (24"x18")	1	PER "BARBER-COLMAN" MOD. WR, RF. CORE, PRIME FINISH.
S.A. GRILLE #1 (12"x 6")	1	PER "BARBER-COLMAN" MOD. MA., RF CORE, GVOL
S.A. GRILLE SECTS (SEE NO. CAB.) (2"x36")	5	PER BARBER-COLMAN" MODEL 37, EQUALLY SPACED IN FLOORED SECTION, MOUNTED CABINET, WITH ANCHORING CLIPS.
BASEBOARD DIFFUSER SECTS. (36"x 2 3/4") (46"x 2 3/4")	2	PER "CARNES" BRANDES NO. 1167 BASEBOARD DIFFUSER W/ANCHORING CLIPS/SCREWS.
EXH. FAN #1 (INTERIOR TOILET)	1	PER "TRADEWIND" MOD. 1701, 50 W., 100 CFM, W/ 2-75 W LAMPS, 4" H VERT. DISCH. DOCT THRU ROOF W/ 12"x12" ROOF JACK & BACK DRAFT DAMPER, ALUMINUM GRILLE TRIM, W/ NO. 13-14-2 MAN. WALL SWITCH
PLUMBING		
WATER CLOSETS W.C. #1	2	PER "AMER STD." "MADERA" "JUNIOR" F-3131, W/ SLOAN ROYAL 110 FVV. FLUSH VALVE MTD. @ 38" IN WALL ABOVE FLOOR W/ CHROME PLATED EXTENSION PIPE EXPOSED DW. TO TOP SPUD OF CLOSETS. SYPHON JET, FLOOR MT. MOLTEX OPEN SEAT, FLOOR MOUNTED.
LAVATORIES LAV #1 MTD. @ 26"	2	PER "AMER STD." "LUCERNE" F-327-51, WALL HANGER, 20"x18"x6" BACK, COLD WATER ONLY BLAIN OFF H.W., W/CHICAGO NO. 333 PUSH BOTTOM MAIN FAUCET, SELF CLOSING, PROVIDE "CHICAGO" 441 LK - 3/8" STOPS
URINAL UR. #1	1	PER "AMER STD." "CHINAL" F-6000-1, W/SLOAN ROYAL 185 H FLUSH V., FLOOR MTD., 1" C.W., INTERNAL SPREADER, #-3303 STRAINER.
CABINET SINK #1	1	PER "AMER STD. P-7021-4, 24"x16", OF ENAMELED C.I., 2-ACID STRAINER, W/CHICAGO NO. 49-8" HIGH SPOUT C.W. FAUCET MTD @ RIGHT SIDE OF SINK, CHICAGO 441 LK-3/8" TRAP.
DRINKING FTN #1	1	PER "HAWS" MOD. 10 X, ENAMELED CAST IRON W/CONCEALED HANGER & LAG SCREWS, STREAM CONTROLLED, COLOR #1 SELECTED BY ARCHITECT, CHICAGO 441 LK-3/8" STOP, 3 BUBBLER, MTD. HEIGHT @ 28"
FIRE EXT. CAB. (F.E.C.)	1	PER "POTTER ROEMER" MODEL 103 VXT. "2A CHARGED WATER EXTINGUISHER - SAME AS PER UNIT-D-F.E.C.
UNIT B - REF M-3 & M-4 MULTI-USE M-4		
HEATING & VENT. F.A. HTG. UNITS #1	2	PER "AMER. BLOWER" MOD. 2V-12, FORCED AIR, H.W. COIL TYPE, 4000 CFM. @ 3/8" S.W.P., 1 HP MOTOR DRIVER, 240 MBH @ 180°F INLET, 50 GPM, 20°AT, COMPLETE UNIT W/1-SPEED ADJ. SHEAVE DRIVE, 2" THICK CLEANABLE MESH FILTERS PER "AIR-SAN" TYPE W., MOTOR MTD. @ LEFT & RIGHT AS SHOWN W/COIL INLET & OUTLET CONNECTIONS AT MOTOR SIDE, AIR FILTER REMOVAL AT MOTOR SIDE, 100% OUTSIDE AIR.
S.A. GRILLES #1 (30"x 8")	6	PER "BARBER-COLMAN" MOD. MA., PRIME FINISH
O.A. INTAKE GRILLE #1 (36"x 30")	1	BY SHT METAL SUB-CONTRACTOR.
F.A. HTG. UNIT #2	2	PER "DRAYER-HANSON" "SPITFIRE" HRC-SER 143, HRC-143, 48.3 MBH @ 50 CFM @ 50 CFM, 1/6 HP MOTOR, WITH BOTTOM RETURN GRILLE AND DISCHARGE GRILLE, HOT WATER COIL ONLY, 180°F. EA., MTD. IN RUFFED CEILING, PROVIDE BTM. R.A. GRILLE & DUCT, IF REQD; GRILLES PER "BARBER-COLMAN" MOD. MA, RF CORE; CONTROLS ARE PART OF "BUILDING SYSTEM.
RANGE EXH. FAN #1	1	PER "CARNES" MOD 130D, 1/8 HP, 400 CFM @ 5/8" S.W.P., COMPLETE W/ADJ'B BACK DRAFT DAMPER, BIRD SCREEN, EXTENDED CURB, HINGED COVER, 1-SPEED CONTROL, W/ MAN. 1-SPEED WALL SWITCH.
DISH WASHING EXH. FAN #1	1	PER "CARNES" MOD. J180, 1/2 HP 1-SPEED MOTOR, 1800 CFM @ 1/2" S.W.P., B.D. DAMPER, BIRD SCREEN, W/1-SPEED MANUAL WALL SWITCH.
EVAPORATIVE COOLER #1	1	PER "CURTISS" MOD. TS 8, 3500 CFM @ 0.0" S.W.P., 3/4 HP MOTOR DRIVE W/ADJ. SHEAVE FOR ~20% SPEED INCREASE, 1-SPEED MOD., 0-60 CIRC. WATER PUMP, FX-150 FLOAT V. KIT, MOUNTING CURCBS ROOF SUPPORTS & ADAPTOR.
S.A. GRILLE #2 (26"x26")	1	PER "CONTROGRAM" MOD. 2226-4 WAY DEFLECTION.
HEATING BOILER #1	1	PER "CYCLOTHERM" MOD. CW-7, 670 MBH OUTPUT, HOT GAS FIRED, FORCED DRAFT, COMPLETE PACKAGED FREE FLOAT, W/INTEGRAL CONTROLS, RELIEF VALVE, STEEL BASE, PROVIDE WITH GAS PILOT BURNER IGNITION, HI LIMIT, & ADJUSTAT, AIR SAFETY SWITCH, CONTROL PANEL, PROVIDE 10 GA STL STACK.
COMPR. TANK & ACCESSORIES	1	PER SHT. M-3 130 NASPEC, 3/4 HP FORCED DRAFT FAN, GAS PILOT FLAME.
CIRC. H.W. PUMP #1	1	PER "WEILMAN" "LIFE" CB-1, 1 1/2 P., 1750 RPM, 75 GPM @ 45' H.D., 2 1/2" 150 TTO W., DIRECT COUPLED DRIVE, W/ASCH. SHAFT SEAL, C.I., OIL, BRON 25 IMPELLER & TRIM, PROVIDE 8" THICK CONCR. BASE MOUNTING PAD, ANCHOR BOLT PUMP BASE PLATE TO PAD.
EXH. FAN #3 (ROOF MTD.)	1	PER "CARNES" MOD. J 24-D, 4000 CFM @ 1/4" S.W.P., 3/4 HP. MOTOR DRIVE, 1-SPEED, ADJ. SHEAVE, 6" D. EPME, PROVIDE AUTO-B.D. DAMPER, BIRD SCREEN.
EXH. GRILLE #1 (30"x 30")	1	PER BARBER COLMAN" MOD MF, V.F. CORE, 30"x 30" W/F.L.R.D. 160°F.
EXH. FAN #4 (CLG. MTD.)	3	PER "TRADEWIND" MOD. 1701, 50 W., 100 CFM, W/2-75 W LAMPS, 4" H VERT DISCH DOCT & 12"x12" ROOF JACK & BACK DRAFT DAMPER, ALUMINUM GRILLE TRIM, 13-14-2 - MANUAL WALL SWITCH BY ELECT.
COMPRESSOR #1 (FREON TYPE FOR WALK-IN BOX) ROOF TO COATED	1	PER "BOHNERT-CHETTE" 1/2 HP, HERMETIC, SUCTION VALVE MOD. A-10C, 8700 BTU/HR CAPACITY @ 100°F AMBIENT @ 30°F EVAP. TEMP., F-12, PROVIDE TYPE L COPPER - 3/8" O.D. 5/8" SUCTION, SWEAT SOLDERED, INSULATE SUCTION W/1/2" THICK "ARMAFLEX", PROVIDE LIQUID SIGHT GLASS & TOUCH OR YEAR "PER "MUELLER", MODEL 4-G SOLDERED, FITTINGS & ACCESSORIES, RAISED BASE MOUNTING ANCHOR BOLT TO CONCR. SLAB.

EQUIPMENT SPECIFICATIONS

ITEM	QUANT.	DESCRIPTION
UNIT - B - REF. M-3 & MULTI-USE M-4		
HTG. & VENT. (CONT.)		
COOLING COIL FAN UNIT #1 (WALK-IN BOX)	1	PER "REGOLD" DELTA COIL DC-62, 800 CFM, 1/2 HP, 110 V., 1Ø, 5 BFPT. COIL SURFACE, 6000 BTU/HR HEAT EXTRACTION @ 10°T.D., PROVIDE MAN. WALL SWITCH CONTROL, 12" FAN, PROVIDE SOLDERTE W/ESD V., 1/2 O.D.
PLUMBING - M-4		
WATER CLOSETS W.C. #1	4	PER "AMER. STD." F-2223-8 W/EXPOSED SLOAN ROYAL FLUSH V. 110 FVV. MTD @ 38" ABV. FLR. W/CHROME INLET PIPE DN. TO SPUD IN CLOSET, ESCO INLET VALVE, ORAN 2000, SYPHON JET, FLOOR MTD.
LAVATORIES LAV. #1 (TOILET M.U.)	2	PER "AMER STD. P-347-51, 20"x18"x6" BACK, COLD WATER ONLY, BLAIN OFF H.W., PROVIDE CHICAGO NO. 333 "FAUCET, PUSH BOTTOM - 1 SHOT CLOSING TYPE - CHICAGO 441 LK-3/8" STOPS, 2" TRAP F-3 6-4 W/CHICAGO 448 LK-3/8" H & C.W. STOPS.
LAV. #2 (TOILETS - KITCH.)	1	PER "AMER STD." P-4718-12 "HARCO" COMPLETE. 26"x14" x 6" BACK W/CHICAGO 441 LK STOPS.
LAV. #3 (KITCH. - RECEIVING)	1	PER "AMER STD." P-4718-12 "HARCO" COMPLETE. 26"x14" x 6" BACK W/CHICAGO 441 LK STOPS.
URINAL UR. #1	1	PER "AMER STD." F-6000-1, SLOAN ROYAL 185H EXPOSED FLUSH V., #-3303 STRAINER, FLOOR MTD. "CHINAL".
SERVICE SINK S/S #1	2	PER "AMER STD." "ARGO" P-7705-1, #-5001 DOUBLE FAUCET, #-4251-1 STRAINER, 2" TRAP OUTLET W/C.O., 24"x20", W/RIM GUARD, 12" BACK.
CABINET SINK #1 (TEACHERS DINING)	1	PER "AMER. STD." P-7021-4, 24"x16", 6" DEEP, W/CHICAGO NO. 50 SINK FAUCET, E.W. ONLY, W/ 10" HIGH GOOSE NECK SPOUT - CHROME, CHICAGO 441 LK-3/8" STOP.
DRINKING FTN #1 (M.U. BLDG ENTRY)	2	PER "HAWS MEDITOX, ENAMELED C.I., 3 BUBBLER W/1 SQUARE ADJ. RIM, SIMPLEX, PROVIDE CHICAGO 441 LK-3/8", 1" E.C.D. FOR STRAINED SUPPLY.
FLOOR SINKS #1 F.S. #1 (KITCHEN)	3	PER "ACORN" NO. 210 B, ALUMINUM BUCKET, ANCHORING LEGS, 2" THREADED OUTLET, 12" FLUSH W/FLOOR W/ AN-BRONZE GRATE COVER.
FLOOR DRAIN #1 F.D. #1 (TOILET & DISHWASHING & HEATER RM)	3	PER "JAY SMITH" FIG 100-B, 2" OUTLET, SQUARE TOP 6"x6".
GREASE INTERCEPTOR #1	1	PER "JAY SMITH" C1-25, 25 GPM, SOLID RETENTION, 2" INLET & OUTLET.
WATER HEATER #1 180°F. DOMESTIC (180°F DISH W.)	1	PER "DAY & NIGHT" 100 JSB, 100 GAL. STORAGE, AT 180°F., W/MIXING VALVE, P-T-RELIEF VALVE, 140°F & 180°F WATER SUPPLY, 3/4" C.W.E.D., 3/4" H.W.E.D. INPUT, 1 3/4" H.W.E.D. OUTPUT AT 4.1 GPM. W/POWERS NE 20 MIXING VALVE NAMUAL SET. FURNISHED WITH DISPOSALL UNDER KITCHEN EQUIPMENT.
FIXTURE #1	—	
FIXTURE #2 (AT S.S. SINK)	1	PER "CHICAGO" NO. 50, H & C.W., 10" HIGH GOOSE-NECK, UPRIGHT, BLOCK TYPE MTD.
FIXTURE #3 (AT RANGE)	1	PER "CHICAGO" NO. 349-CT - 7 3/8" SWING SPOUT W/SOFTFLO.
FIXTURE #4 (AT DISH. INK)	2	PER "CHICAGO" NO. 448-LD-DJ, CLASSIC SINK FAUCET W/13" O.J. SPOUT & SOFTFLO.
FIXTURE #5 (GARBAGE)	1	PER "CHICAGO" NO. 257 LAUNDRY FAUCET, BRUSH NICKEL PLATED, 4 3/8" SPOUT WITH THREADED HOSE END, PLAUNGER HANDLE 1/4" SCRWD H & C.W. PROVIDE CHICAGO #442 L.K. STOPS AT EA. SUPPLY LINE TO FIXTURE
FIRE HOSE CAB. (F.H.C.)	2	PER "POTTER ROEMER" MOD 303 VXT W/75' FIRE HOSE, #-2A HARD WATER PRESSURED EXTINGUISHER BRASS CLASS. SEEDS W/ GLASS & DECAL, COMPLETE AND CHARGED. PER POTTER ROEMER" IS-LB, HAND TYPE CO2 W/HOSE, COMPLETE, EXPOSED BRACKET MTD.
HAND CO2 EXT. (KITCHEN)	1	
FLOOR DRAIN #2 (GARBAGE RM.) F.D. #2	1	PER "JAY SMITH" NO. 146, DUCO COATED CAST IRON, LOOSE JET TOP GRATE, REMOVABLE SEDIMENT BUCKET, 3" C.I.P. TRAP & OUTLET.
UNIT - C - REF M-5 ADMINISTRATION		REF. SHT. M-5
MISCELLANEOUS EQUIPMENT M-1 THRU M-8		
PLUMBING		
AUTOMATIC FIRE SPRINKLER HEADS (F.H.) UNIT B	8	PER "CENTRAL AUTOMATIC SPRINKLER CORP." TYPE "ISSUE-C", CEILING MTD., RESIDUALT TYPE, 1/2" I.P.T., BRASS BODY, SATIN CHROME FINISH, U.L.&.U. APPROVED.
UNIT C	2	
UNIT D	2	
UNIT E	6	
FLOOR CLEAN OUTS (F.C.O.)		WITHIN BLDG. - PER "ACORN" NO. 130-2 EXTERIOR OPENING - PER "ACORN" NO. 170-3 PER "ACORN" NO. 180-34, POLISHED FACE ACCESS, W/ALLEN LOCKING DEVICE.
WALL CLEANOUTS		
WALL VALVE ACCESS PANELS		PER "ACORN" - 85-H HINGED W/ALLEN LOCKING DEVICE - CHROME PLATED.
VALVE ACCESS BOXES, IN GROUND, EXTERIOR OF BLDG.		SHALL BE CAST CONCRETE, ROUND OR SQUARE, 12"x12" MIN. DIMENSION W/ REMOVABLE CAST COVER. COVER W/ CAST IN IDENTIFICATION E.G. "GAS VALVE", "WATER VALVE", PER "ACORN" PRODUCTS CO.
HOSE BIBBS		WITHIN BLDG.: PER "BERGAL" NO. B-106, WALL MTD. W/L.H. OPERATOR. EXTERIOR OF BLDG - WALL MTD. - SAME NO. B-106 & PER "BERGAL" NO. B-259 @ 4'-0" ABV. GRADE.
STEAM LINES PRESS. GAGES DIAL THERMS		PER VARIAN "Y" TYPE SCREWED, MANUAL SCREW. PER "ASHCROFT" NO. 1279 PER "PALMER" NO. 1085 3 1/2" DIAL FACE.
HTG. & VENT.		
INTEGRATED CONTROL DIAGRAM		PER INTEGRATED CONTROL DIAGRAM THIS SHEET M-8

NOTE: EQUIPMENT QUANTITIES ARE INDICATED FOR ENGINEERING COST ESTIMATES AND FOR THE CONVENIENCE OF CONTRACTORS ESTIMATORS. QUANTITIES SHOWN ON THE PLANS SHALL PREVAIL IN ALL CASES.

(1) DETAIL NO. SEE SPECS SECT. 22
(A1) DETAIL NUMBER SHEET NUMBER

CHECK AND VERIFY ALL DIMENSIONS BEFORE PROCEEDING WITH WORK. REPORT ANY DISCREPANCIES TO THE ARCHITECT

J. M. RADEMACHER
CONSULTING ENGINEER
M.E. 11186 E.E. 4-2770
BAKERSFIELD, CALIFORNIA

STATE OF CALIFORNIA - DEPARTMENT OF PUBLIC WORKS
DIVISION OF ARCHITECTURE
APPLICATION NO. 10617
APPROVED JUN 16 1959
DATE
SUPERVISING STRUCTURAL ENGINEER

EDWARD LOWE
ELECTRICAL ENGINEER
1012 FULTON ST.
AMHERST 6-2524
FRESNO CALIFORNIA

WILSON AND WILSON
STRUCTURAL ENGINEERS
2802 N. FIGUEROA ST.
CAPITOL 2-0291
LOS ANGELES 65 CALIFORNIA

BAKERSFIELD CITY SCHOOL DISTRICT
BOARD OF EDUCATION
APPROVED BY BOARD OF EDUCATION
BAKERSFIELD CITY SCHOOL DISTRICT
DATE JUN 22 1959
BY
SUPERINTENDENT OF SCHOOLS AND EXECUTIVE OFFICER

JOB NO. 58-74
DRAWN J.L.
CHECKED
DATE APR. 24, 1959

Stuhr and Hicks
ARCHITECTS
BAKERSFIELD CALIFORNIA
C-1610 C-983

CONTROLS DIAGRAM AND EQUIPMENT SCHEDULE
SECTION 35 SCHOOL
BAKERSFIELD CITY SCH