# WING 100 - DOOR SCHEDULE

| DR. NO. | DOOR TYPE | DOOR SIZE (EACH LEAF) | DOOR MATL | LOUVER SIZE | FRAME TYPE | FRAME MATL | RATING | HDWR NO. | DETAILS L/JAMB | DETAILS HEAD | DETAILS R/JAMB | DETAILS SILL | REMARKS SEE TYP DOOR NOTES #1, 2, 3, 4, 5, 6, 8, 11, 13, 14, 17, 18 AND 19 FOR ADDITIONAL REQUIREMENTS * HARDWARE TO BE PROVIDED BY CABINET CONTRACTOR | DR. NO. |
|---|---|---|---|---|---|---|---|---|---|---|---|---|---|---|
| 101 | A | 3'-0"x7'-0" | AL | - | A | AL | | 01 | 8/A10.2 | 1/A10.2 | 1/A10.2 | 3/A10.2 | - | 101 |
| 102 | B | 3'-0"x7'-0" | HM | - | C | HM | | 02 | 30/A10.3 | 9/A10.2 | 26/A10.3 | 3/A10.2 | SEE DOOR NOTE #12 | 102 |
| 103 | B | 2'-8"x7'-0" | HM | - | C | HM | | 08 | 30/A10.3 | 9/A10.2 | 26/A10.3 | 3/A10.2 | SEE DOOR NOTE #12 | 103 |
| 104 | B | 3'-0"x7'-0" | HM | - | C | HM | | 13 | 30/A10.3 | 9/A10.2 | 30/A10.3 | 3/A10.2 | SEE DOOR NOTE #12 | 104 |
| 105 | B | 3'-0"x7'-0" | HM | 8x12 | C | HM | | 03 | 30/A10.3 | 9/A10.2 | 30/A10.3 | 3/A10.2 | SEE DOOR NOTES #9, #10 AND #16 | 105 |
| 106 | C | 3'-0"x7'-0" | HM | - | C | HM | | 08 | 26/A10.3 | 9/A10.2 | 30/A10.3 | 3/A10.2 | - | 106 |
| 107 | C | 3'-0"x7'-0" | HM | - | C | HM | | 02 | 30/A10.3 | 9/A10.2 | 30/A10.3 | 3/A10.2 | SEE DOOR NOTE #12 | 107 |
| 108 | G | 3'-0"x7'-0" | WD | - | B | HM | | 04 | 5/A10.2 | 5/A10.2 | 5/A10.2 | - | SEE DOOR NOTES #7 AND #15 | 108 |
| 109 | F | 3'-0"x7'-0" | WD | - | B | HM | | 05 | 5/A10.2 | 5/A10.2 | 5/A10.2 | - | SEE DOOR NOTES #7 AND #15 | 109 |
| 110 | F | 3'-0"x7'-0" | WD | - | B | HM | | 05 | 5/A10.2 | 5/A10.2 | 5/A10.2 | - | SEE DOOR NOTES #7 AND #15 | 110 |
| 111 | G | 3'-0"x7'-0" | WD | - | B | HM | | 33 | 5/A10.2 | 5/A10.2 | 5/A10.2 | RS-1 | SEE DOOR NOTES #7 AND #10 | 111 |
| 112 | G | 3'-0"x7'-0" | WD | - | B | HM | | 07 | 5/A10.2 | 5/A10.2 | 5/A10.2 | RS-2 | SEE DOOR NOTES #7 AND #10 | 112 |
| 113 | G | 3'-0"x7'-0" | WD | - | B | HM | | 19 | 5/A10.2 | 5/A10.2 | 5/A10.2 | - | SEE DOOR NOTE #7 | 113 |
| 114 | G | 3'-0"x7'-0" | WD | - | B | HM | | 19 | 5/A10.2 | 5/A10.2 | 5/A10.2 | RS-3 | SEE DOOR NOTES #7 AND #15 | 114 |
| 115 | E | 3'-0"x2'-11" GATE 1¼" THK | WD | - | - | - | | * | - | - | - | - | DOUBLE SWING MFRD BY CAB CONTR - SEE ALT #5 | 115 |
| 116 | E | 3'-0"x2'-11" GATE 1¼" THK | WD | - | - | - | | * | - | - | - | - | DOUBLE SWING MFRD BY CAB CONTR - SEE ALT #5 | 116 |

# WING 200 - DOOR SCHEDULE

| DR. NO. | DOOR TYPE | DOOR SIZE (EACH LEAF) | DOOR MATL | LOUVER SIZE | FRAME TYPE | FRAME MATL | RATING | HDWR NO. | DETAILS L/JAMB | DETAILS HEAD | DETAILS R/JAMB | DETAILS SILL | REMARKS SEE TYP DOOR NOTES #1, 2, 3, 4, 5, 6, 8, 11, 13, 14, 17, 18 AND 19 FOR ADDITIONAL REQUIREMENTS | DR. NO. |
|---|---|---|---|---|---|---|---|---|---|---|---|---|---|---|
| 201 | C | 4'-0"x7'-0" | HM | - | B | HM | | 09 | 5/A10.2 | 5/A10.2 | 5/A10.2 | 4/A10.2 | SEE DOOR NOTE #15 | 201 |
| 202 | C | 3'-0"x7'-0" | HM | - | C | HM | | 08 | 26/A10.3 | 9/A10.2 | 5/A10.2 | 3/A10.2 | SEE DOOR NOTE #12 | 202 |
| 203 | C | 3'-0"x7'-0" | HM | - | C | HM | | 02 | 5/A10.2 | 9/A10.2 | 26/A10.3 | 3/A10.2 | SEE DOOR NOTE #12 | 203 |
| 204 | C | 3'-0"x7'-0" | HM | - | B | HM | | 11 | 5/A10.2 | 5/A10.2 | 5/A10.2 | 4/A10.2 | SEE DOOR NOTE #12 | 204 |
| 205 | B | 3'-0"x7'-0" | HM | 18x12 | B | HM | | 12 | 5/A10.2 | 5/A10.2 | 5/A10.2 | 4/A10.2 | SEE DOOR NOTES #9 AND #12 | 205 |
| 206 | C | 3'-0"x7'-0" | HM | - | B | HM | | 31 | 5/A10.2 | 5/A10.2 | 5/A10.2 | 3/A10.2 | SEE DOOR NOTE #12 | 206 |
| 207 | C | 3'-0"x7'-0" | HM | - | B | HM | | 14 | 5/A10.2 | 5/A10.2 | 5/A10.2 | 3/A10.2 | SEE DOOR NOTE #10 | 207 |
| 208 | D | PAIR 3'-0"x7'-0" | HM | - | B | HM | | 15 | 5/A10.2 | 5/A10.2 | 5/A10.2 | 3/A10.2 | SEE DOOR NOTE #16 - EEH | 208 |
| 209 | D | PAIR 3'-0"x7'-0" | HM | - | B | HM | | 15 | 5/A10.2 | 5/A10.2 | 5/A10.2 | 3/A10.2 | SEE DOOR NOTE #16 - EEH | 209 |
| 210 | C | 3'-0"x7'-0" | HM | - | B | HM | | 14 | 5/A10.2 | 5/A10.2 | 5/A10.2 | 3/A10.2 | SEE DOOR NOTE #10 | 210 |
| 211 | C | 3'-0"x7'-0" | HM | - | B | HM | | 16 | 5/A10.2 | 5/A10.2 | 5/A10.2 | 3/A10.2 | EEH | 211 |
| 212 | C | 3'-0"x7'-0" | HM | - | (E) | (E) | | 16 | 5/A10.2 | 5/A10.2 | 5/A10.2 | 3/A10.2 | EEH | 212 |
| 213 | C | 3'-0"x7'-0" | HM | - | B | HM | | 17 | 5/A10.2 | 5/A10.2 | 5/A10.2 | 4/A10.2 | SEE DOOR NOTE #12 - EEH | 213 |
| 214 | D | PAIR 3'-0"x7'-0" | HM | - | B | HM | | 15 | 5/A10.2 | 5/A10.2 | 5/A10.2 | 3/A10.2 | EEH | 214 |
| 215 | G | 3'-0"x7'-0" | WD | - | B | HM | | 18 | 5/A10.2 | 5/A10.2 | 5/A10.2 | - | SEE DOOR NOTES #7 AND #15 | 215 |
| 216 | F | 3'-0"x7'-0" | WD | - | B | HM | | 18 | 5/A10.2 | 5/A10.2 | 5/A10.2 | RS-3 | SEE DOOR NOTES #7 AND #15 | 216 |
| 217 | G | 3'-0"x7'-0" | WD | - | B | HM | | 20 | 5/A10.2 | 5/A10.2 | 5/A10.2 | RS-1 | SEE DOOR NOTES #7 AND #10 | 217 |
| 218 | G | 3'-0"x7'-0" | WD | - | B | HM | | 21 | 5/A10.2 | 5/A10.2 | 5/A10.2 | RS-4 | SEE DOOR NOTES #7 AND #15 | 218 |
| 219 | G | 3'-0"x7'-0" | WD | - | B | HM | 20 MIN | 22 | 5/A10.2 | 5/A10.2 | 5/A10.2 | SEE HDWR | SEE DOOR NOTE #7 | 219 |
| 220 | G | 3'-0"x7'-0" | WD | - | B | HM | | 24 | 5/A10.2 | 5/A10.2 | 5/A10.2 | - | SEE DOOR NOTES #7 AND #15 | 220 |
| 221 | G | 3'-0"x7'-0" | WD | - | B | HM | | 25 | 5/A10.2 | 5/A10.2 | 5/A10.2 | RS-4 | SEE DOOR NOTE #7 | 221 |
| 222 | G | 3'-0"x7'-0" | WD | - | B | HM | | 25 | 5/A10.2 | 5/A10.2 | 5/A10.2 | RS-4 | SEE DOOR NOTE #7 | 222 |
| 223 | (E) | (E) | (E) | - | (E) | (E) | | 23 | - | - | - | - | HARDWARE ONLY THIS DOOR | 223 |
| 224 | (E) | (E) | (E) | - | (E) | (E) | | 23 | - | - | - | - | HARDWARE ONLY THIS DOOR | 224 |
| 225 | (E) | (E) | (E) | - | (E) | (E) | | 23 | - | - | - | - | HARDWARE ONLY THIS DOOR | 225 |

# WING 300 - DOOR SCHEDULE

| DR. NO. | DOOR TYPE | DOOR SIZE (EACH LEAF) | DOOR MATL | LOUVER SIZE | FRAME TYPE | FRAME MATL | RATING | HDWR NO. | DETAILS L/JAMB | DETAILS HEAD | DETAILS R/JAMB | DETAILS SILL | REMARKS SEE TYP DOOR NOTES #1, 2, 3, 4, 5, 6, 8, 11, 13, 14, 17, 18 AND 19 FOR ADDITIONAL REQUIREMENTS | DR. NO. |
|---|---|---|---|---|---|---|---|---|---|---|---|---|---|---|
| 301 | B | 3'-0"x7'-0" | HM | - | C | HM | | 26 | 5/A10.2 | 9/A10.2 | 26/A10.3 | 4/A10.2 | SEE DOOR NOTE #15 | 301 |
| 302 | B | 3'-0"x7'-0" | HM | - | C | HM | | 26 | 26/A10.3 | 9/A10.2 | 5/A10.2 | 4/A10.2 | SEE DOOR NOTE #15 | 302 |
| 303 | B | 3'-5 ¾"x7'-0" | HM | - | C | HM | | 35 | 26/A10.3 | 9/A10.2 | 26/A10.3 | 3/A10.2 | SEE DOOR NOTES #12 AND #16 | 303 |
| 304 | B | 3'-5 ¾"x7'-0" | HM | - | C | HM | | 35 | 26/A10.3 | 9/A10.2 | 26/A10.3 | 3/A10.2 | SEE DOOR NOTES #12 AND #16 | 304 |
| 305 | D | PAIR 3'-0"x6'-8" | HM | - | B | HM | | 38 | 5/A10.2 | 5/A10.2 | 5/A10.2 | 4/A10.2 | - | 305 |
| 306 | - | NOT USED | - | - | - | - | | - | - | - | - | - | - | 306 |
| 307 | G | 3'-0"x7'-0" | WD | - | B | HM | | 28 | 5/A10.2 | 5/A10.2 | 5/A10.2 | RS-1 | SEE DOOR NOTES #7 AND #10 | 307 |
| 308 | G | 3'-0"x7'-0" | WD | - | B | HM | | 28 | 5/A10.2 | 5/A10.2 | 5/A10.2 | RS-1 | SEE DOOR NOTES #7 AND #10 | 308 |
| 309 | F | 3'-0"x7'-0" | WD | - | B | HM | | 19 | 5/A10.2 | 5/A10.2 | 5/A10.2 | RS-3 | SEE DOOR NOTE #7 | 309 |
| 310 | F | 3'-0"x7'-0" | WD | - | B | HM | | 19 | 5/A10.2 | 5/A10.2 | 5/A10.2 | RS-3 | SEE DOOR NOTE #7 | 310 |
| 311 | F | 3'-0"x7'-0" | WD | - | B | HM | | 06 | 5/A10.2 | 5/A10.2 | 5/A10.2 | - | SEE DOOR NOTE #7 | 311 |

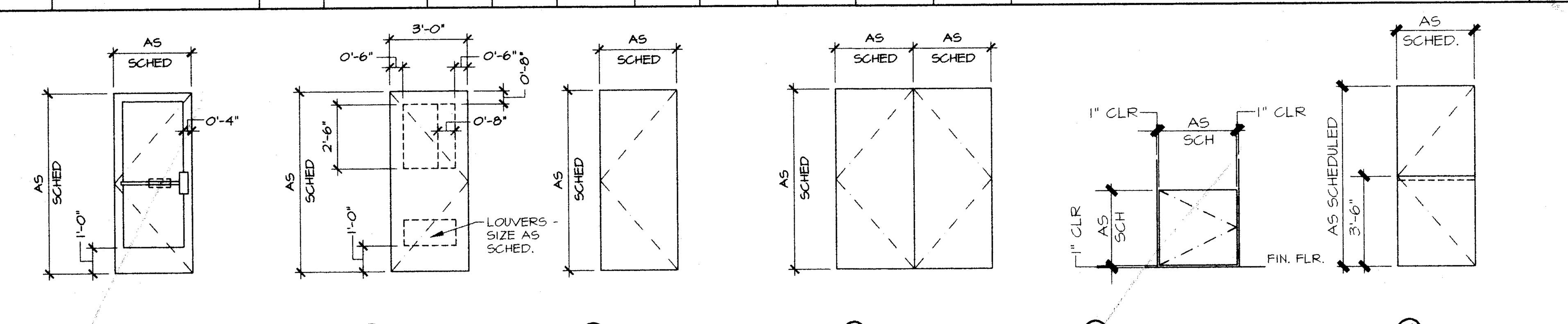


(A) ALUMINUM MEDIUM STYLE W/ TEMP. GL.
(B) HOLLOW METAL W/ TEMP. GL.
(F) WD (SOLID CORE) W/ TEMP. GL.
(C) HOLLOW METAL
(G) WD (SOLID CORE)
(D) HOLLOW METAL
(E) WD (SOLID CORE) MFRD BY CAB CONTR
(H) WD (SOLID CORE) DUTCH DOOR

## DOOR TYPES

1/4"=1'-0"

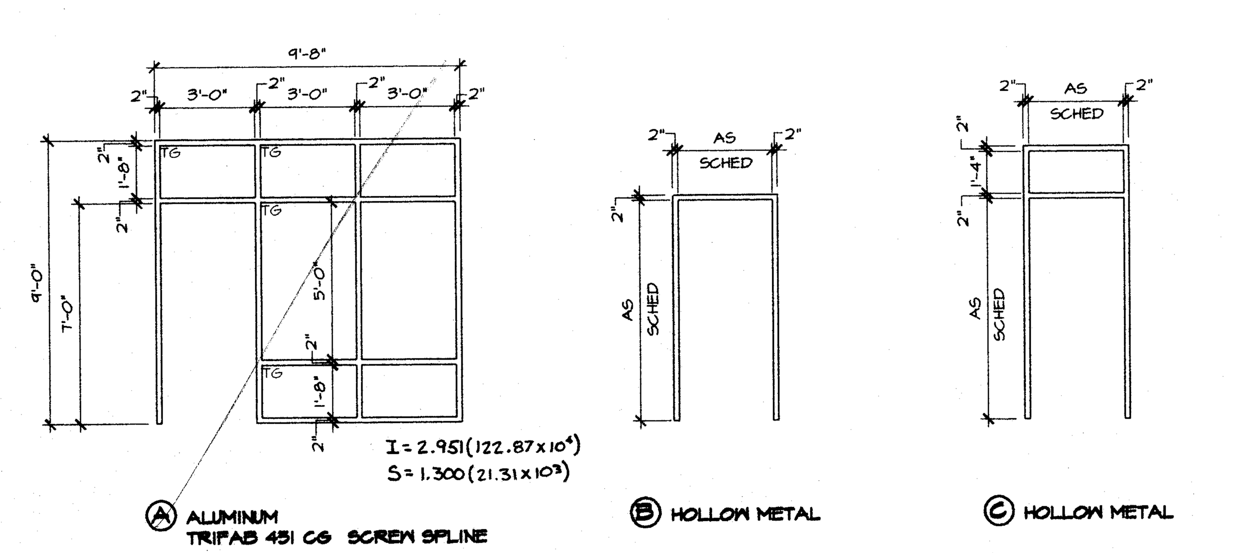


(A) ALUMINUM TRIFAB 451 CG SCREW SPLINE
(B) HOLLOW METAL
(C) HOLLOW METAL

## DOOR FRAMES AS VIEWED FROM EXTERIOR -UNO

1/4"=1'-0"

## TYPICAL DOOR NOTES

1. FOR BUILDERS HARDWARE, REFER TO SPECIFICATION SECTION 08710
2. EXIT DOOR REQUIREMENTS:
   ALL EXIT DOORS IN SCHOOL BUILDINGS, INCLUDING BUT NOT LIMITED TO DOORS OF TOILETS, AND STORAGE ROOMS, SHALL CONFORM WITH THE REQUIREMENTS OF SECTION 3304 TITLE 24. THE FOLLOWING ARE SOME OF THE REQUIREMENTS:
   EXIT DOORS SHALL BE OPENABLE FROM THE INSIDE WITHOUT THE USE OF A KEY OR ANY SPECIAL KNOWLEDGE OR EFFORT.
   HAND ACTIVATED DOOR OPENING HARDWARE SHALL BE CENTERED BETWEEN 30" AND 44" (INCHES) ABOVE THE FLOOR.
   DEAD BOLTS ARE NOT PERMITTED UNLESS OPERABLE WITH A SINGLE EFFORT BY LEVER TYPE HARDWARE.
3. ALL EXTERIOR FACED DOOR GLAZING SHALL BE SINGLE GLAZED, TINTING TO MATCH WINDOW GLAZING.
4. ALL ALUM. DOORS & DOOR FRAMES SHALL BE MEDIUM BRONZE FINISHED.
5. ALL HOLLOW METAL DOOR & DOOR FRAMES SHALL BE PAINTED W/ SEMI-GLOSS ENAMEL.
6. ALL WOOD DOORS SHALL RECEIVE STAIN W/ SEMI-TRANSPARENT FINISH.
7. ALL INTERIOR DOOR FRAMES SHALL BE 2" WIDE UNLESS OTHERWISE NOTED.
8. ADJUST DOOR CLOSING DEVICES TO 8 1/2 LBS. EXTERIOR & 5 LBS. INTERIOR.
9. PAINT LOUVER(S), SIZE AND LOCATION AS INDICATED, W/ SEMI-GLOSS ENAMEL FINISH.
10. HANDICAP TOILET ROOM SIGNAGE (5/A10.0)
11. ALL INTERIOR GLAZING SHALL BE 1/4" CLEAR WIRE GLASS UNLESS OTHERWISE NOTED (SQUARE PATTERN)
12. PROVIDE VISION PANEL, SIZE AS INDICATED, W/ 1/4" CLEAR WIRE GLASS( SQUARE PATTERN )
13. DOOR LEVER REQUIREMENTS (18/A10.0)
14. TYPICALLY GROUT ALL HM DOOR JAMB BOTTOMS (17/A10.0)
15. PROVIDE HALF LITE, SIZE AS INDICATED, W/ 1/4" CLEAR WIRE GLASS( SQUARE PATTERN )
16. PROVIDE VINYL DOOR SIGN GRAPHICS AND ROOM NUMBERS PER DETAIL (2/A8.1)
17. PROVIDE DOOR SIGNAGE PER SPECS
18. REFER TO DETAIL FOR HEADER SIZES REQUIRED (21/A10.3)
19. MIN FLOOR SPACE REQUIREMENTS AT DOORS (22/A10.3)

# WING 400 - DOOR SCHEDULE

| DR. NO. | DOOR TYPE | DOOR SIZE (EACH LEAF) | DOOR MATL | LOUVER SIZE | FRAME TYPE | FRAME MATL | RATING | HDWR NO. | DETAILS L/JAMB | DETAILS HEAD | DETAILS R/JAMB | DETAILS SILL | REMARKS SEE TYP DOOR NOTES #1, 2, 3, 4, 5, 6, 8, 11, 13, 14, 17, 18 AND 19 FOR ADDITIONAL REQUIREMENTS | DR. NO. |
|---|---|---|---|---|---|---|---|---|---|---|---|---|---|---|
| 401 | B | 3'-0"x7'-0" | HM | 18x12 | B | HM | | 29 | 5/A10.2 | 5/A10.2 | 5/A10.2 | - | SEE DOOR NOTE #9 | 401 |
| 402 | B | 3'-0"x7'-0" | HM | 18x12 | B | HM | | 11 | 5/A10.2 | 5/A10.2 | 5/A10.2 | 4/A10.2 | SEE DOOR NOTES #9 AND #12 | 402 |
| 403 | B | 3'-0"x7'-0" | HM | - | C | HM | | 31 | 5/A10.2 | 9/A10.2 | 5/A10.2 | 3/A10.2 | SEE DOOR NOTE #12 | 403 |
| 404 | B | 3'-0"x7'-0" | HM | - | C | HM | | 31 | 5/A10.2 | 9/A10.2 | 5/A10.2 | 3/A10.2 | SEE DOOR NOTE #12 | 404 |
| 405 | B | 3'-0"x7'-0" | HM | - | C | HM | | 31 | 5/A10.2 | 9/A10.2 | 5/A10.2 | 3/A10.2 | SEE DOOR NOTE #12 | 405 |
| 406 | B | 3'-0"x7'-0" | HM | - | C | HM | | 31 | 5/A10.2 | 9/A10.2 | 5/A10.2 | 3/A10.2 | SEE DOOR NOTE #12 | 406 |
| 407 | B | 3'-0"x7'-0" | HM | - | C | HM | | 31 | 5/A10.2 | 9/A10.2 | 5/A10.2 | 3/A10.2 | SEE DOOR NOTE #12 | 407 |
| 408 | B | 3'-0"x7'-0" | HM | 18x12 | C | HM | | 32 | 5/A10.2 | 9/A10.2 | 5/A10.2 | 3/A10.2 | SEE DOOR NOTES #9 AND #12 | 408 |
| 409 | B | 3'-0"x7'-0" | HM | 18x12 | B | HM | | 36 | 5/A10.2 | 25/A10.2 | 5/A10.2 | 4/A10.2 | SEE DOOR NOTES #9 AND #10 | 409 |
| 410 | B | 3'-0"x7'-0" | HM | 18x12 | B | HM | | 36 | 5/A10.2 | 25/A10.2 | 5/A10.2 | 4/A10.2 | SEE DOOR NOTES #9 AND #10 | 410 |

# WING 500 - DOOR SCHEDULE

| DR. NO. | DOOR TYPE | DOOR SIZE (EACH LEAF) | DOOR MATL | LOUVER SIZE | FRAME TYPE | FRAME MATL | RATING | HDWR NO. | DETAILS L/JAMB | DETAILS HEAD | DETAILS R/JAMB | DETAILS SILL | REMARKS SEE TYP DOOR NOTES #1, 2, 3, 4, 5, 6, 8, 11, 13, 14, 17, 18 AND 19 FOR ADDITIONAL REQUIREMENTS | DR. NO. |
|---|---|---|---|---|---|---|---|---|---|---|---|---|---|---|
| 501 | B | 3'-0"x7'-0" | HM | 18x12 | B | HM | | 37 | 5/A10.2 | 25/A10.2 | 5/A10.2 | 4/A10.2 | SEE DOOR NOTES #9 AND #10 | 501 |
| 502 | B | 3'-0"x7'-0" | HM | - | C | HM | | 10 | 5/A10.2 | 9/A10.2 | 5/A10.2 | 3/A10.2 | SEE DOOR NOTE #12 | 502 |
| 503 | B | 3'-0"x7'-0" | HM | - | C | HM | | 10 | 5/A10.2 | 9/A10.2 | 5/A10.2 | 3/A10.2 | SEE DOOR NOTE #12 | 503 |
| 504 | B | 3'-0"x7'-0" | HM | - | C | HM | | 10 | 5/A10.2 | 9/A10.2 | 5/A10.2 | 3/A10.2 | SEE DOOR NOTE #12 | 504 |
| 505 | B | 3'-0"x7'-0" | HM | - | C | HM | | 10 | 5/A10.2 | 9/A10.2 | 5/A10.2 | 3/A10.2 | SEE DOOR NOTE #12 | 505 |
| 506 | B | 3'-0"x7'-0" | HM | - | C | HM | | 31 | 5/A10.2 | 9/A10.2 | 5/A10.2 | 3/A10.2 | SEE DOOR NOTE #12 | 506 |
| 507 | C | 3'-0"x7'-0" | HM | - | C | HM | | 35 | 5/A10.2 | 9/A10.2 | 5/A10.2 | 3/A10.2 | SEE DOOR NOTE #12 | 507 |
| 508 | B | 3'-0"x7'-0" | HM | 18x12 | B | HM | | 37 | 5/A10.2 | 25/A10.2 | 5/A10.2 | 3/A10.2 | SEE DOOR NOTES #9 AND #10 | 508 |
| 509 | G | 3'-0"x7'-0" | WD | - | B | HM | | 07 | 5/A10.2 | 5/A10.2 | 5/A10.2 | - | SEE DOOR NOTES #7 AND #10 | 509 |
| 510 | G | 3'-0"x7'-0" | WD | - | B | HM | | 33 | 5/A10.2 | 5/A10.2 | 5/A10.2 | | SEE DOOR NOTES #7 AND #10 | 510 |

# WING 600 - DOOR SCHEDULE

| DR. NO. | DOOR TYPE | DOOR SIZE (EACH LEAF) | DOOR MATL | LOUVER SIZE | FRAME TYPE | FRAME MATL | RATING | HDWR NO. | DETAILS L/JAMB | DETAILS HEAD | DETAILS R/JAMB | DETAILS SILL | REMARKS SEE TYP DOOR NOTES #1, 2, 3, 4, 5, 6, 8, 11, 13, 14, 17, 18 AND 19 FOR ADDITIONAL REQUIREMENTS | DR. NO. |
|---|---|---|---|---|---|---|---|---|---|---|---|---|---|---|
| 601 | B | 3'-0"x7'-0" | HM | 18x12 | B | HM | | 37 | 5/A10.2 | 25/A10.2 | 5/A10.2 | 4/A10.2 | SEE DOOR NOTES #9 AND #10 | 601 |
| 602 | B | 3'-0"x7'-0" | HM | - | C | HM | | 26 | 5/A10.2 | 9/A10.2 | 5/A10.2 | 4/A10.2 | SEE DOOR NOTE #12 | 602 |
| 603 | B | 3'-0"x7'-0" | HM | - | C | HM | | 10 | 5/A10.2 | 9/A10.2 | 5/A10.2 | 3/A10.2 | SEE DOOR NOTE #12 | 603 |
| 604 | B | 3'-0"x7'-0" | HM | - | C | HM | | 10 | 5/A10.2 | 9/A10.2 | 5/A10.2 | 3/A10.2 | SEE DOOR NOTE #12 | 604 |
| 605 | B | 3'-0"x7'-0" | HM | - | C | HM | | 10 | 5/A10.2 | 9/A10.2 | 5/A10.2 | 3/A10.2 | SEE DOOR NOTE #12 | 605 |
| 606 | B | 3'-0"x7'-0" | HM | - | C | HM | | 10 | 5/A10.2 | 9/A10.2 | 5/A10.2 | 3/A10.2 | SEE DOOR NOTE #12 | 606 |
| 607 | B | 3'-0"x7'-0" | HM | - | C | HM | | 10 | 5/A10.2 | 9/A10.2 | 5/A10.2 | 3/A10.2 | SEE DOOR NOTE #12 | 607 |
| 608 | B | 3'-0"x7'-0" | HM | 18x12 | C | HM | | 27 | 5/A10.2 | 9/A10.2 | 5/A10.2 | 3/A10.2 | SEE DOOR NOTES #9 AND #12 | 608 |
| 609 | H | 3'-0"x7'-0" | HM | - | B | HM | | 30 | 5/A10.2 | 9/A10.2 | 5/A10.2 | 4/A10.2 | - | 609 |
| 610 | B | 3'-0"x7'-0" | HM | 18x12 | B | HM | | 37 | 5/A10.2 | 25/A10.2 | 5/A10.2 | 3/A10.2 | SEE DOOR NOTES #9 AND #10 | 610 |

16. Refer to Drawings Sheet A5.1 Door and Window Schedule:
ADD #1
a. DELETE: Windows Types 2, 3, and 4.
b. DELETE: Door Frame A.
c. DELETE: Door Types A and E.
d. DELETE: Door schedule for Bldg.'s 100-600.
e. ADD: Door schedule for Bldg.'s 100-600 per attached Drawing No. 12.

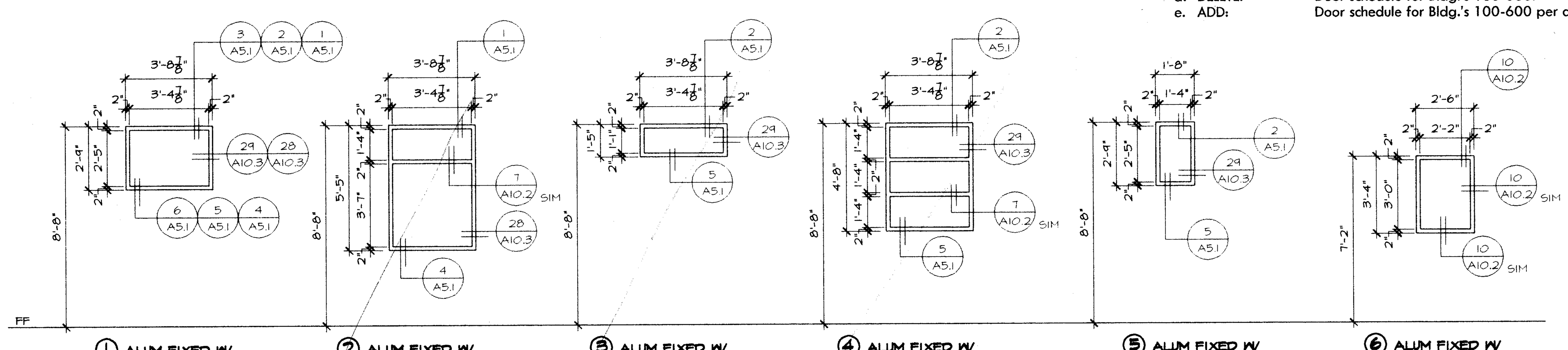


(1) ALUM FIXED W/ TINTED DUAL PANE
(2) ALUM FIXED W/ TINTED DUAL PANE
(3) ALUM FIXED W/ TINTED DUAL PANE
(4) ALUM FIXED W/ TINTED DUAL PANE
(5) ALUM FIXED W/ TINTED DUAL PANE
(6) ALUM FIXED W/ TINTED DUAL PANE

## WINDOW TYPES

1/4"=1'-0"

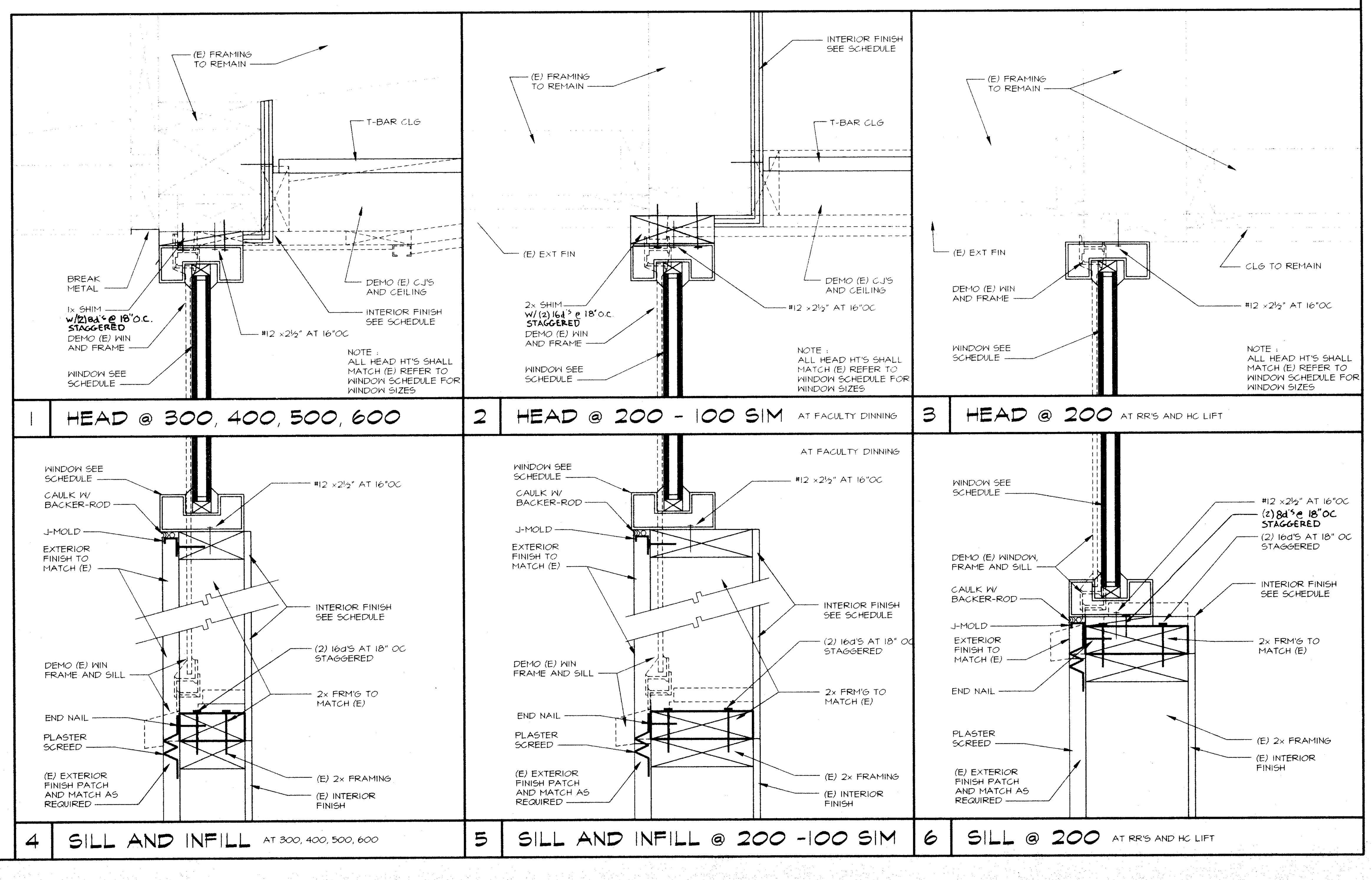


1 HEAD @ 300, 400, 500, 600
2 HEAD @ 200 - 100 SIM AT FACULTY DINNING
3 HEAD @ 200 AT RR'S AND HC LIFT
4 SILL AND INFILL AT 300, 400, 500, 600
5 SILL AND INFILL @ 200 -100 SIM
6 SILL @ 200 AT RR'S AND HC LIFT

### LEGEND

ALUM ALUMINUM
EEH EMERGENCY EGRESS HARDWARE
EX EXISTING
FAC FACTORY
GL GLASS
HM HOLLOW METAL
HR HOUR
INSUL INSULATING
MIN MINUTE
MTL METAL
OH OPPOSITE HAND
PR PAIR
PLAM PLASTIC LAMINATE FINISHED

### LEGEND

RS REDUCER STRIP
SS STAINLESS STEEL
SCHED SCHEDULED
TG TEMPERED GLASS
VP VISION PANEL
WG WIRE GLASS
WD WOOD (SOLID CORE)

### REDUCER STRIP SCHEDULE

NOTE: ALL NUMBERS ARE MERCER

RS-1 = 633 TILE REDUCER
RS-2 = 930 SNAP DOWN T IN 910 TRACK
RS-3 = 152 CARPET TO RESILIENT TRANSITION
RS-4 = 735 UNDERSLUNG REDUCER (DRYBACK)


SCArchitect, Inc.
1301 L Street
Bakersfield, CA 93301
(661) 327-1632

LICENSED ARCHITECT STEPHEN J. CORBIN No. C-16788 REN. 11/30/99 STATE OF CALIFORNIA
Stephen J. Corbin, NCARB, AIA



IDENTIFICATION STAMP
DIV. OF THE STATE ARCHITECT
OFFICE OF REGULATION SERVICES
APPL: 03-102156
FILE: 15-6
AC F.K. SS
DATE AUG 19 1999


# RUTH HARDING SCHOOL

MODERNIZATION
3201 PICO AVE.
FOR
BAKERSFIELD CITY SCHOOL DISTRICT
BAKERSFIELD, KERN COUNTY, CALIFORNIA

DOOR AND WINDOW SCHEDULE

CHECK AND VERIFY ALL DIMENSIONS BEFORE PROCEEDING WITH THE WORK. REPORT DISCREPANCIES TO THE ARCHITECT. ALL CONSTRUCTION SHALL CONFORM TO THE C.B.C.

| MARK | DATE | REVISIONS |
|---|---|---|
| 1 | | |
| 2 | | |
| 3 | | |
| 4 | | |
| 5 | | |

JOB NO. 957
DRAWN: BRENT
CHECKED:
DATE: 08/16/99

5.1
17 OF 31 SHEETS