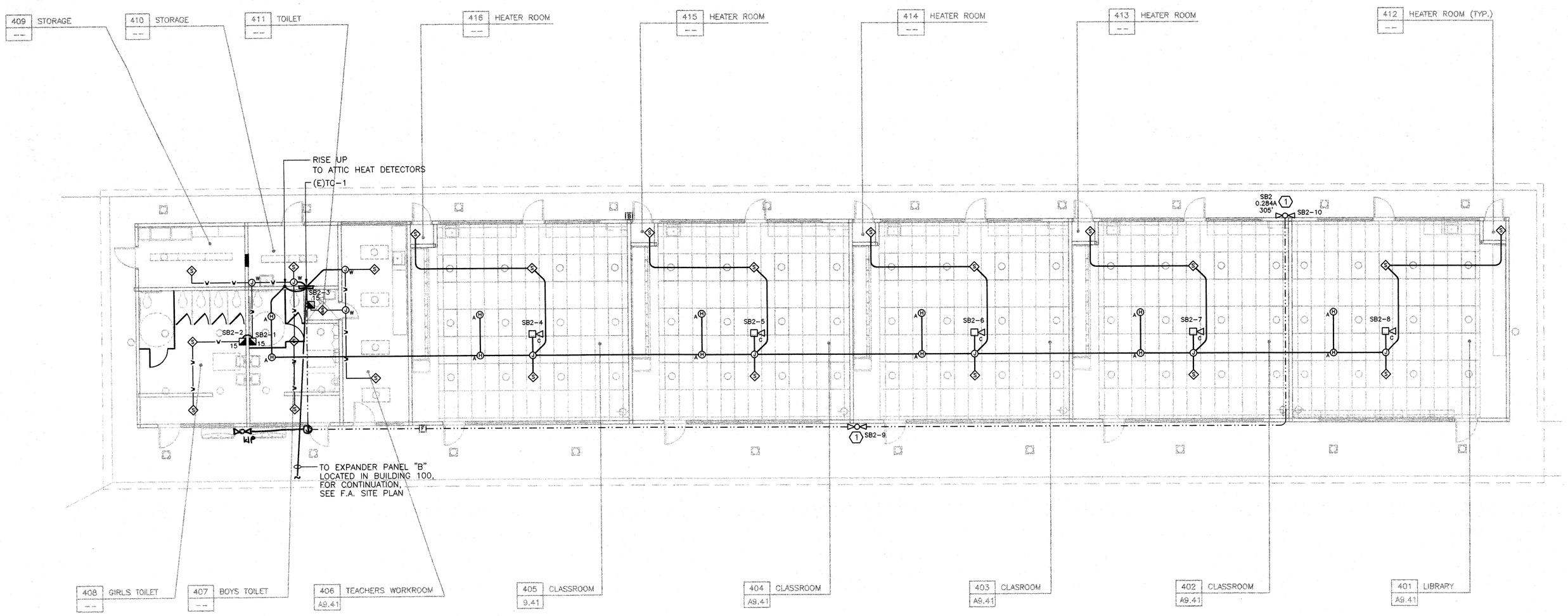

FIRE ALARM FLOOR PLAN BLDG. 400

0 4 8 16

N

D:\Drawings\BFGC\02-135\02135-bldg D-E2.43.dwg, E2.43, 6/19/2003 1:26:24 PM, Aleksenko, 1:1, Copyright 2003 Interstate Engineering, Inc. (Plotted by Tatyana)

KEYNOTES

1. REPLACE EXISTING EXTERIOR FIRE ALARM HORN WITH NEW WP EXTERIOR FIRE ALARM HORN. SEE FIRE ALARM SINGLE LINE RISER DIAGRAM.

FULLY AUTOMATIC SYSTEM

FIRE ALARM COMPLETE PLAN SUBMITTAL

KEY PLAN

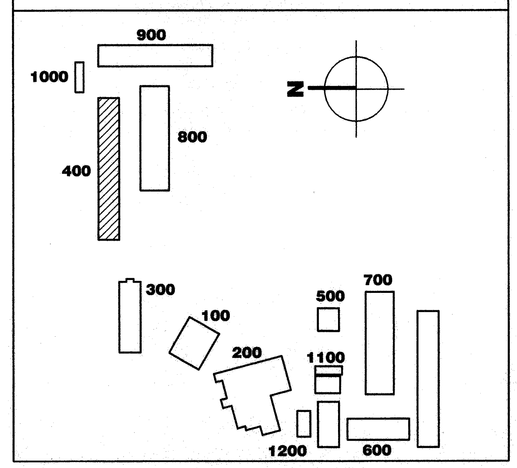

bfgc Architecture

Bakersfield
5500 ming avenue, suite 450, bakersfield, ca 93309
661.836.4300 fax 661.836.4311

San Jose
150 south first st., suite 200
san jose, california 95113
408.924.0841
fax 408.924.0844

San Luis Obispo
4115 broad street, suite b-6
san luis obispo, ca 93401
805.546.0433
fax 805.546.0504

Oakland
350 frank ogawa plaza., suite 300
oakland, california 94612
510.891.0670
fax 510.891.0674

Principal Architects

david r. cartinal, f.a.i.a.,	C-6564	dean a. tatsuno, a.i.a.,	C- 9190
frank a. ghezzi, a.i.a.,	C-3132	bruce m. biggar, a.i.a.,	C-23134
mark engelien, a.i.a.,	C-8021	brad henderson, a.i.a.,	C-10901
william r. tucuiet, a.i.a.,	C-8702	richard t. mello, a.i.a.,	C-18079

No. C8021
REN.
REGISTERED ARCHITECT STATE OF CALIFORNIA

REGISTERED PROFESSIONAL ENGINEER JAMES W. GRAHAM No. 5101 09/30/06 Electrical Engineer STATE OF CALIFORNIA

INTERSTATE ENGINEERING INC. ESTABLISHED 1968
466 W. Fallbrook Ave., Suite 105
Fresno, California 93711
(559) 432-4490 / (559) 432-4494 fax
James W. Graham. Electrical Engineer
E.E. #5101

rev. no:	rev. date:	revision:

AGENCY TRACKING No:

FILE No: 15-6

IDENTIFICATION STAMP
DIV. OF THE STATE ARCHITECT
APPL NO: 03-106663
AC. FLS. SS.
DATE 06-24-03

MODERNIZATION

FOR

HENRY EISSLER SCHOOL
2901 EISSLER STREET
BAKERSFIELD, CA 93306

BAKERSFIELD CITY SCHOOL DISTRICT

BUILDING 400 FIRE ALARM FLOOR PLAN

Version Date: Version time:

job no.	02-126
date	06/24/03
drawn by	T.V.A.
chk'd by	D.P.G.
©copyright	2003

E 2.43