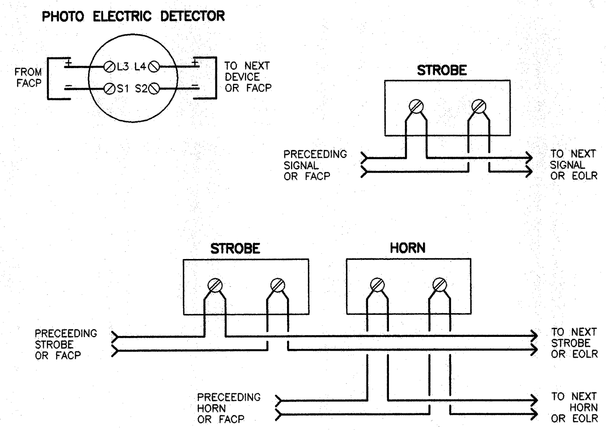

TYPICAL DEVICE WIRING DIAGRAMS

NO SCALE

6 / E-1.14

SYSTEM NO. WL1001
(FORMERLY SYSTEM NO. 147)
F RATINGS-1, 2, 3 AND 4 HR (SEE ITEMS 2 AND 3)
T RATINGS-0, 1, 2, 3, AND 4 HR (SEE ITEM 3)
L RATINGS AT AMBIENT-LESS THAN 1 CFM/sq ft
L RATING AT 400 F-LESS THAN 1 CFM/sq ft
(SEE UL DIRECTORY FOR COMPLETE COMPONENT AND INSTALLATION DETAILS.)

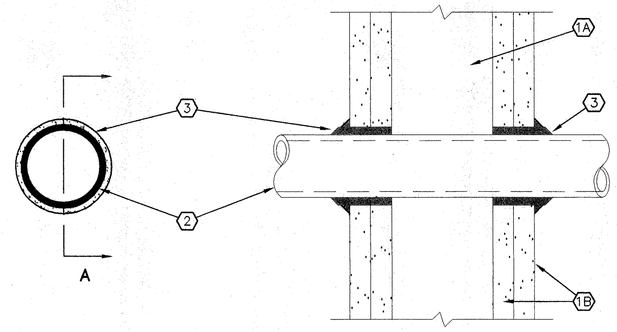

SECTION A-A

NOTES:

1. Wall Assembly – The 1, 2, 3 or 4 hr fire-rated gypsum wallboard/stud wall assembly shall be constructed of the materials and in the manner described in the individual U300 or U400 Series Wall or Partition Designs in the UL Fire Resistance Directory and shall include the following construction features:
   A. Studs–Wall framing may consist of either wood studs (max 2 h fire rated assemblies) or steel channel studs. Wood studs to consist of nom 2 by 4 in. lumber spaced 16 in. OC with nom 2 by 4 in. lumber end plates and cross braces. Steel studs to be min 3-5/8 in. wide by 1-3/8 in. deep channels spaced max 24 in. OC.
   B. Wallboard, Gypsum–Nom 1/2 or 5/8 in. thick, 4 ft wide with square or tapered edges. The gypsum wallboard type, thickness, number of layers, fastener type and sheet orientation shall be as specified in the individual U300 or U400 Series Design in the UL Fire Resistance Directory. Max diam of opening is 13-1/2 in.
2. Pipe or Conduit–Nom 12 in. diam (or smaller) Schedule 10 (or heavier) steel pipe, nom 12 in. diam (or smaller) service weight (or heavier) cast iron soil pipe, nom 12 in. diam (or smaller) Class 50 (or heavier) ductile iron pressure pipe, nom 6 in. diam (or smaller) steel conduit, nom 4 in. diam (or smaller) steel electrical metallic tubing, nom 6 in. diam (or smaller) Type L or (or heavier) copper tubing or nom 1 in. diam (or smaller) flexible steel conduit. When copper pipe is used, max F Rating of firestop system (Item 3) is 2 h. Steel pipes or conduits larger than nom 4 in. diam may only be used in walls constructed using steel channel studs. A max of one pipe or conduit is permitted in the firestop system. Pipe or conduit to be installed near center of stud cavity width and to be rigidly supported on both sides of wall assembly.
3. Fill, Void or Cavity Material–Caulk–Caulk fill material installed to completely fill annular space between pipe or conduit and gypsum wallboard and with a min 1/4 in. diam bead of caulk applied to perimeter of pipe or conduit at its egress from the wall. Caulk installed symmetrically on both sides of wall assembly. The hourly F Rating of the firestop system is dependent upon the hourly fire rating of the wall assembly in which it is installed, as shown in the following table. The hourly T Rating of the firestop system is dependent upon the type or size of the pipe or conduit and the hourly fire rating of the wall assembly in which it is installed, as tabulated below:

Max Pipe or Conduit Diam, In.	Annular Space, In.	F Rating, Hr.	T Rating, Hr.
1	0 to 3/16	1 or 2	0+, 1 or 2
1	1/4 to 1/2	3 or 4	3 or 4
4	0 to 1/4	1 or 2	0
4	0 to 1-1/2#	1 or 2	0
6	1/4 to 1/2	3 or 4	0
12	3/16 to 3/8	1 or 2	0

+When copper pipe is used, T Rating is 0 h.
#0 to 1-1/2 in. annular space applies only when Type CP-25 WB+ caulk is used and only when the min. thickness of the gypsum wallboard is 5/8 in. for 1 hr rated walls and 1-1/4 in. for 2 hr rated walls.

Minnesota Mining & Mfg. Co.-CP 25 WB+
*Bearing the UL Classification Marking

LOOKS FOR MARK ON PRODUCT

FIRE STOP DETAIL CALCULATIONS

4 / E-1.14

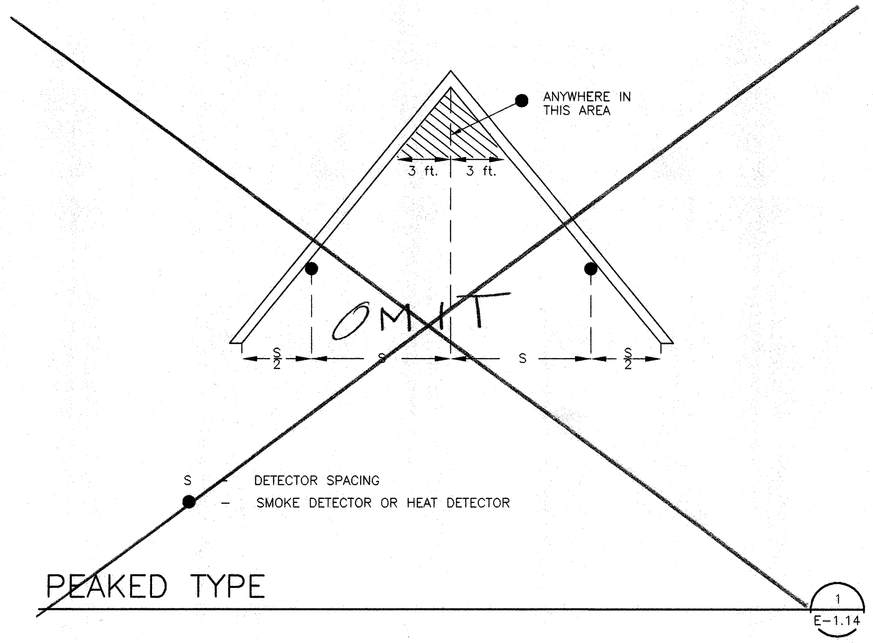

PEAKED TYPE

1 / E-1.14

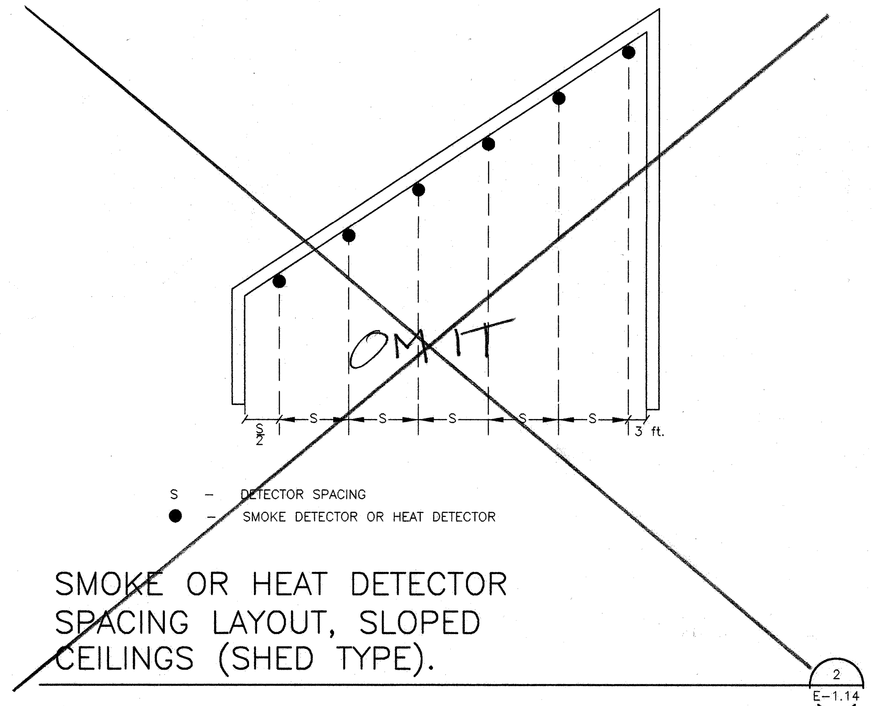

SMOKE OR HEAT DETECTOR SPACING LAYOUT, SLOPED CEILINGS (SHED TYPE).

2 / E-1.14

NO SCALE

3 / E-1.14

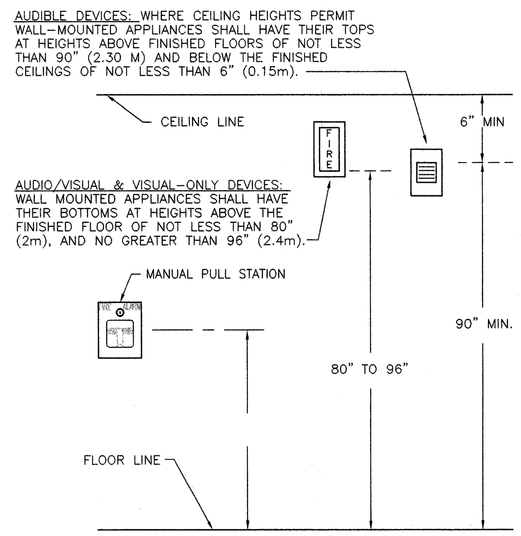

F.A. DEVICE ELEVATION

NO SCALE

5 / E-1.14

FULLY AUTOMATIC SYSTEM

FIRE ALARM COMPLETE PLAN SUBMITTAL

bfgc Architecture

Bakersfield
5500 ming avenue, suite 450, bakersfield, ca 93309
661.836.4300 fax 661.836.4311

San Jose
150 south first st., suite 200
san jose, california 95113
408.924.0841
fax 408.924.0844

San Luis Obispo
4115 broad street, suite b-5
san luis obispo, ca 93401
805.546.0433
fax 805.546.0504

Oakland
350 frank ogawa plaza., suite 300
oakland, california 94612
510.891.0670
fax 510.891.0674

Principal Architects
david r. cartral, f.a.i.a., C-6564
frank o. ghezzi, a.i.a., C-3132
mark engelien, a.i.a., C-8021
william r. tuculet, a.i.a., C-8702
dean a. tatsuno, a.i.a., C- 9190
bruce m. biggar, a.i.a., C-23134
brad henderson, a.i.a., C-10901
richard t. mello, a.i.a., C-18079

LICENSED ARCHITECT DAVID R. CARTRAL No. 6564 STATE OF CALIFORNIA

REGISTERED PROFESSIONAL ENGINEER JAMES W. GRAHAM No. 5101 09/30/06 ELECTRICAL ENGINEER STATE OF CALIFORNIA

INTERSTATE ENGINEERING ESTABLISHED 1968
466 W. Fallbrook Ave., Suite 106
Fresno, California 93711
(559) 432-4490 / (559) 432-4494 fax
James W. Graham. Electrical Engineer
E.E. #5101

rev. no: rev. date: revision:

AGENCY TRACKING No: _____

FILE No: 15-6

IDENTIFICATION STAMP
DIV. OF THE STATE ARCHITECT
APPL NO: 03-106663
AC.____ FLS. SN SS R2
DATE 06-24-03

MODERNIZATION

FOR

HENRY EISSLER SCHOOL
2901 EISSLER STREET
BAKERSFIELD, CA 93306

BAKERSFIELD CITY SCHOOL DISTRICT

FIRE ALARM DETAILS

Version Date: Version time:

job no.	02-126
date	06/24/03
drawn by	T.V.A.
chk'd by	D.P.G.
©copyright	2003

E 1.14

D:\Drawings\BFGC\02-135\02135-E1.14.dwg, E1.14, 6/19/2003 1:25:32 PM, Aleksenko, 1:1, Copyright 2003 Interstate Engineering, Inc. (Plotted by Tatyana)