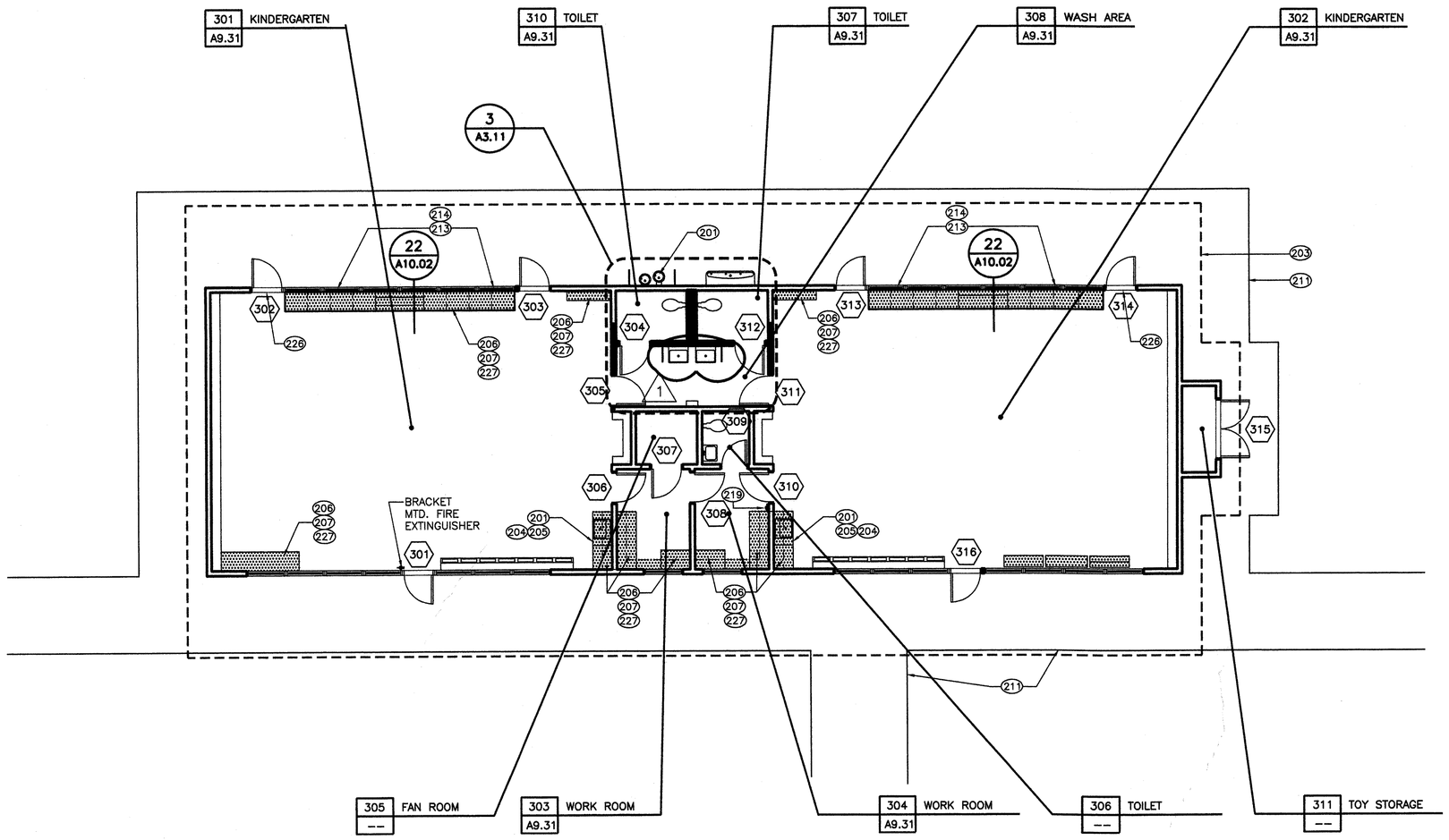


## BUILDING 300 FLOOR PLAN

0' 4' 8' 16'

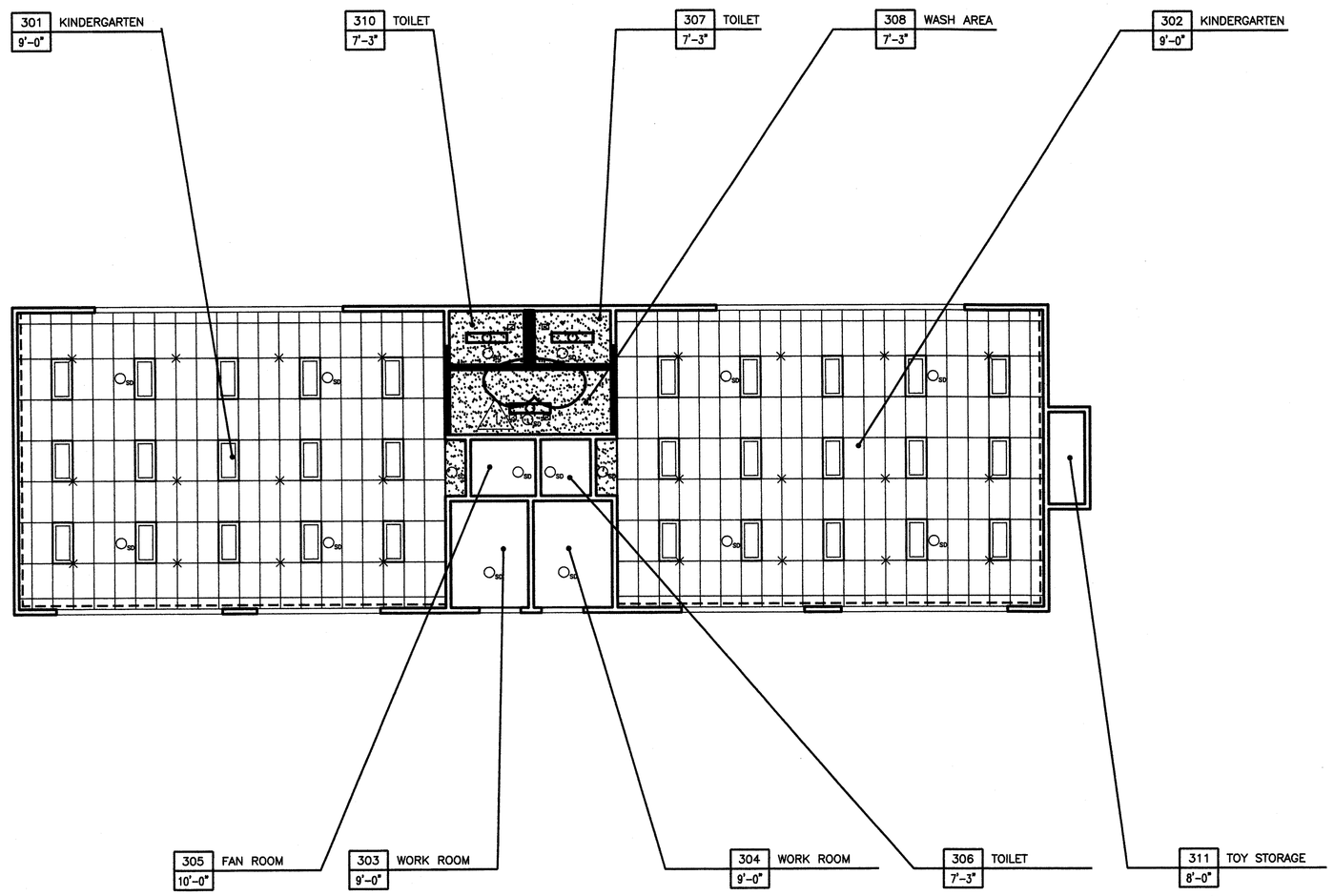


## BUILDING 300 REFLECTED CEILING PLAN

0' 4' 8' 16'

## KEYNOTES

NOTE: KEYNOTES IN THIS LIST MAY NOT NECESSARILY OCCUR ON THIS SHEET.

201 PROVIDE PLUMBING FIXTURE. REFER TO PLUMBING DRAWINGS.
202 (E) FENCE TO REMAIN.
203 (E) LINE OF ROOF ABOVE.
204 REMOVE PORTION OF (E) CASEWORK . REFER TO INTERIOR ELEVATIONS.
205 PROVIDE CASEWORK. REFER TO INTERIOR ELEVATIONS. FOR EXTENTS.
206 REMOVE (E) COUNTERTOP SHOWN HATCHED.
207 PROVIDE COUNTERTOP SHOWN HATCHED. REFER TO INTERIOR ELEVATIONS.
208 PROVIDE DRINKING FOUNTAIN BARRIER RAIL. REFER TO DETAIL 24/A10.02
209 PROVIDE TOILET PARTITION. REFER TO DETAILS 12/A10.02 & 18/A10.02.
210 PROVIDE WHEELCHAIR LIFT WITH BATTERY BACK-UP.
211 EDGE OF (E) WALKWAY.
212 REPAINT ALL (E) WINDOWS AT THIS BUILDING.
213 REMOVE (E) WINDOWS, PROVIDE PARTIAL INFILL PER INTERIOR ELEVATIONS, PATCH AND REPAIR EXTERIOR PLASTER AROUND INSTALLATION OF WINDOWS.
214 PROVIDE WOOD FRAME/ EXTERIOR FINISH BELOW INSTALLATION OF WINDOWS TO MATCH (E) WALL.
215 REPLACE HANDRAIL REFER TO 2/A3.11 FOR DIMENSIONS. REFER TO 15/A3.11 FOR DETAIL.
216 PATCH AND REPAIR (E) TILE FLOOR TO MATCH (E) ADJACENT WHERE REMODEL OCCUR.
217 (E) ADA COMPLIANT RAMP TO REMAIN.
218 (E) TOILET PARTITION TO REMAIN.
219 (E) FIRE EXTINGUISHER/CABINET TO REMAIN.
220 REMOVE (E) OBSERVATION WINDOW AND INFILL OPENING, PATCH & REPAIR TO MATCH THE ADJACENT WALL.
222 PROVIDE PORTABLE ASSISTIVE LISTENING DEVICE. REFER TO DETAIL 28/A10.03
223 RELOCATE CASEWORK
224 PROVIDE 2" CONTRASTING COLORSTRIP AT TOP AND BOTTOM TREAD.
225 PROVIDE 2" CONTRASTING COLORSTRIP AT EACH TREAD.
226 PROVIDE SIGN TO READ "NOT AND ACCESSIBLE EXIT" ABOVE DOOR.
227 REFURBISH CASEWORK SHOWN HATCHED. REFER TO INTERIOR ELEVATIONS.

## CEILING LEGEND

NOTE: ALL ITEMS INDICATED ON THIS LIST MAY NOT NECESSARILY OCCUR ON THIS SHEET.

RM # ROOM NAME
X'-X" CEILING HEIGHT
"HEAVY DUTY" 2X4 SUSPENDED ACOUSTICAL CEILING SYSTEM
1X4 SURFACE MOUNT LIGHT FIXTURE
SURFACE MOUNT LIGHT FIXTURE
RECESSED LIGHT FIXTURE SEE ELECTRICAL DRAWINGS FOR ADDITIONAL INFORMATION
AIR TERMINAL. SEE MECHANICAL DRAWINGS FOR ADDITIONAL INFORMATION
X'-X" CEILING HEIGHT
G.B. CEILING / SOFFIT
NO CEILING WORK U.O.N.

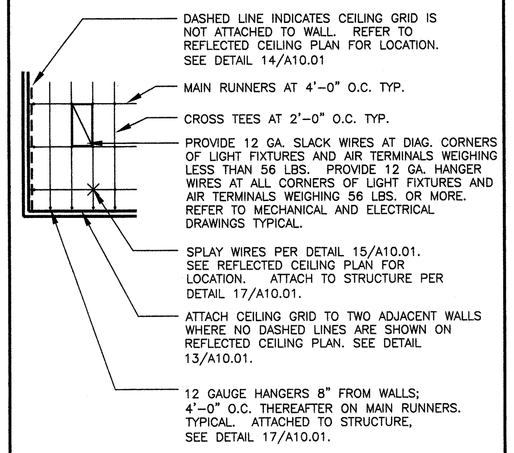


## PLAN LEGEND

NOTE: ALL SYMBOLS AND PATTERNS MAY NOT NECESSARILY OCCUR ON THIS SHEET.

2X STUD WALL / INFILL WALL. SEE KEYNOTES FOR CONSTRUCTION INFORMATION. (REFER TO SHT. A10.01 FOR WALL TYPES) (REFER TO DET. 27/A10.01 FOR INFILL OF (E) WALL OPENING).
60-INCH ACCESSIBLE FLOOR SPACE LOCATION
32-INCH X 48-INCH ACCESSIBLE FLOOR SPACE LOCATION
ONE HOUR WALL W/60 MIN. RATED OPENINGS PER CBC SEC. 302.3 (OCCUPANCY SEPARATION)
EXITS

## KEY PLAN

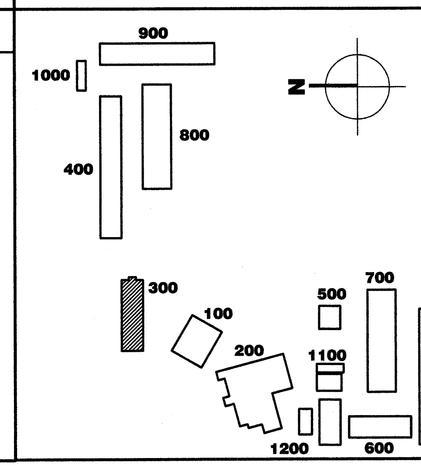



bfgc Architecture

Bakersfield
5500 ming avenue, suite 450, bakersfield, ca 93309
661.836.4300 fax 661.836.4311

San Jose
150 south first st., suite 200
san jose, california 95113
408.924.0841
fax 408.924.0844

San Luis Obispo
4115 broad street, suite b-5
san luis obispo, ca 93401
805.546.0433
fax 805.546.0504

Oakland
350 frank ogawa plaza, suite 300
oakland, california 94612
510.891.0670
fax 510.891.0674

Principal Architects
david r. carlisle, f.a.i.a., C-5564
frank a. ghezzi, a.i.a., C-3132
mark engelen, a.i.a., C-8021
william r. tuculet, a.i.a., C-8702
dean a. tatsuno, a.i.a., C- 9190
bruce m. biggar, a.i.a., C-23134
brad henderson, a.i.a., C-10901
richard l. mello, a.i.a., C-18079


| rev. no: | rev. date: | revision: |
|---|---|---|
| | | |
| | | |
| | | |
| | | |
| 1 | 5-14-07 | OWNER REVISION |

FILE NO: 15-6
IDENTIFICATION STAMP DIV. OF THE STATE ARCHITECT
APPL NO: 01-106663
AC____ FLS____ SS____
DATE 05-08-03
REVISED

# MODERNIZATION

FOR

HENRY EISSLER SCHOOL
2901 EISSLER STREET
BAKERSFIELD, CA 93306

BAKERSFIELD CITY SCHOOL DISTRICT

# BUILDING 300 FLOOR PLAN

| Version Date: | Version time: |
|---|---|
| job no. | 02-126 |
| date | 6-24-03 |
| drawn by | D.HERRERA |
| chk'd by | R.TROST |
| ©copyright | 2003 |

A 2.31