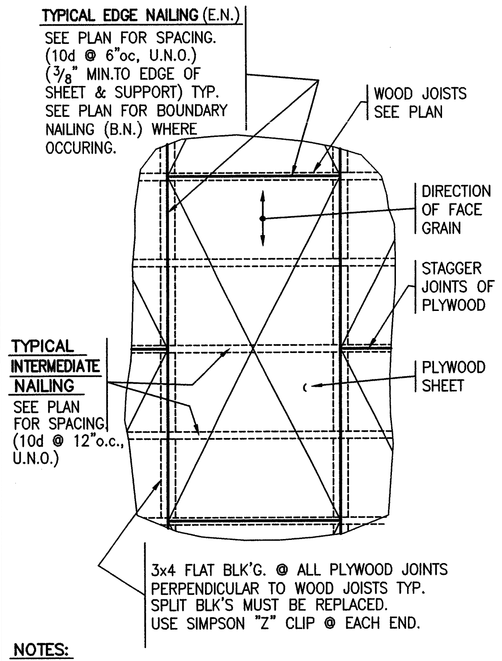

NOTES:

1. 4'-0" SIDE OF PLYWOOD SHEETS TO SPLICE OVER ROOF JOIST TYPICAL. NO PLYWOOD SHEETS TO BE LESS THAN 2'-0" x 4'-0" IN SIZE.
2. USE OF MACHINE NAILING IS SUBJECT TO A SATISFACTORY JOBSITE DEMONSTRATION AND THE APPROVAL BY THE ARCHITECT, STRUCTURAL ENGINEER AND DSA. THE APPROVAL IS SUBJECT TO CONTINUED SATISFACTORY PERFORMANCE. IF NAILHEADS PENETRATE THE OUTER PLY MORE THAN WOULD BE NORMAL FOR A HAND HAMMER OR IF MINIMUM ALLOWABLE EDGE DISTANCES ARE NOT MAINTAINED THE PERFORMANCE WILL BE DEEMED UNSATISFACTORY.

TYPICAL PLYWOOD SHEATHING DETAIL 12

OPENING WIDTH	NUMBER OF FULL-HEIGHT STUDS		
	ALL EXTERIOR WALLS	INTERIOR BEARING WALLS	INTERIOR NON-BEARING WALLS
7'-0" OR LESS	2	2	1
7'-1" TO 10'-0"	3	2	1
OVER 10'-0"	4	2	1

NOTE: OMIT FULL-HT. STUDS WHERE POST FOR HOLDDOWN ANCHOR OCCURS. SEE PLAN AND TYPICAL HOLDOWN DETAIL 30/S-100.

LINTEL SCHEDULE

BEARING AND EXTERIOR WALLS		NON-BEARING WALLS	
OPENING WIDTH	LINTEL SIZE	OPENING WIDTH	LINTEL SIZE
6'-0" OR LESS	6x6 (*2-4x6)	8'-0" OR LESS	4x6 @ 2x4 WALLS 6x6 @ 2x6 WALLS
6'-1" TO 8'-0"	6x8 (*2-4x8)	8'-1" TO 12'-0"	4x8 @ 2x4 WALLS 6x8 @ 2x6 WALLS
8'-1" TO 10'-0"	6x10 (*2-4x10)		

*AT 2x8 OR LARGER WALLS.

NOTE: USE 6x LINTEL MEMBERS IN 2x4 STUD WALLS.

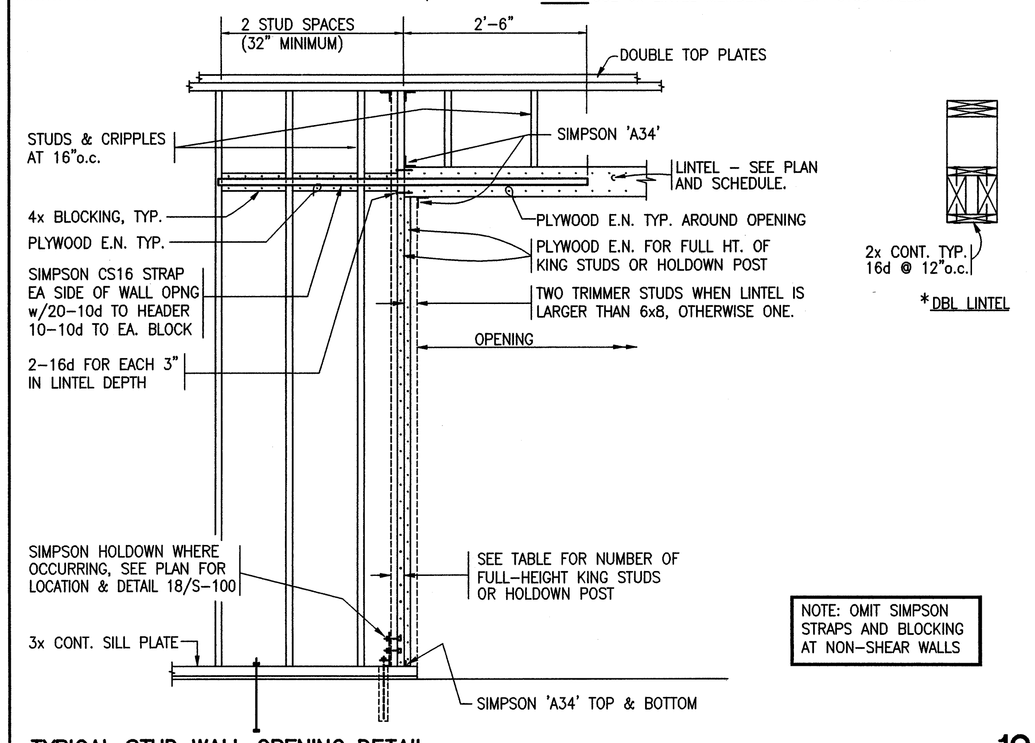

NOTE: OMIT SIMPSON STRAPS AND BLOCKING AT NON-SHEAR WALLS

TYPICAL STUD WALL OPENING DETAIL 10

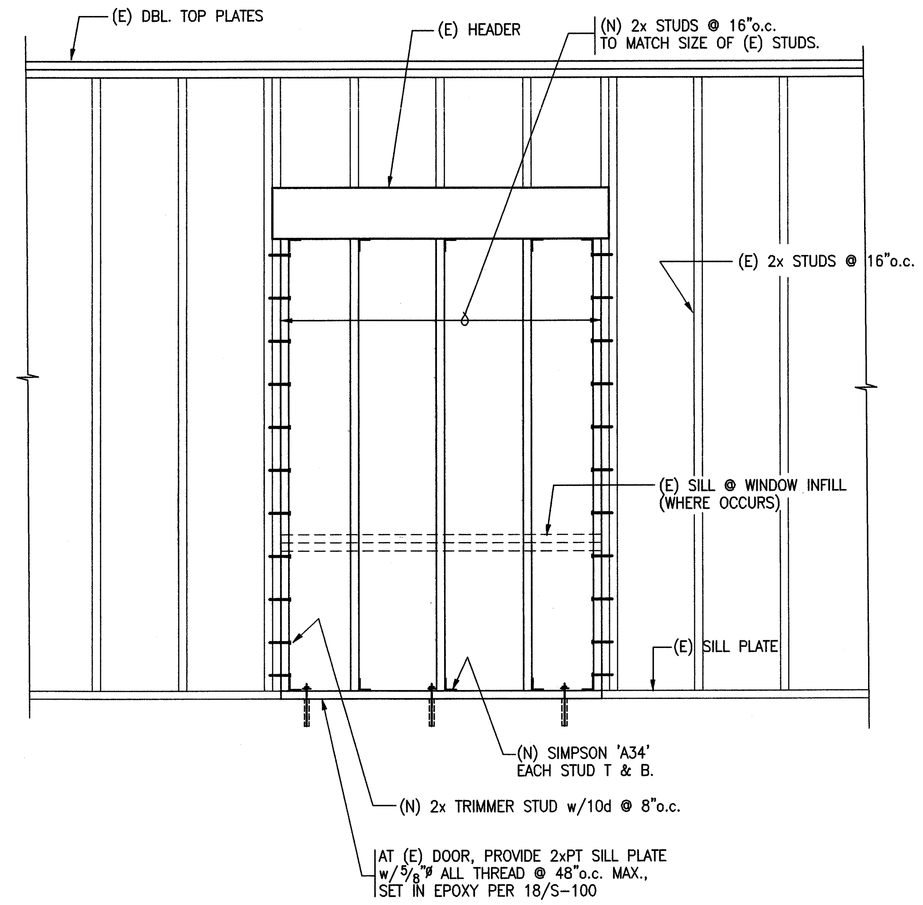

INFILL (E) OPENING 8

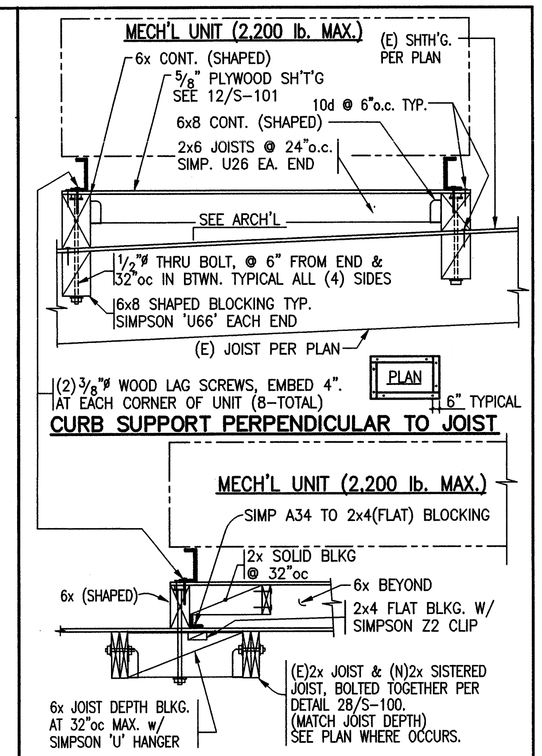

NOTES:

1. REFER TO ARCH'L. DWGS. FOR PLATFORM DETAILS. WHERE PLATFORM IS NOT NEEDED (AT ROOFS 2:12 AND LESS) AND THE EQUIPMENT BASE CURB SITS DIRECTLY ON THE MAIN ROOF PLYWOOD SHEATHING, PROVIDE BLOCKING DETAILS AS SHOWN AND OMIT PLATFORM.
2. SPAN 2x6 PLATFORM JOISTS IN THE SHORT DIMENSION OF THE PLATFORM. HOWEVER, IF THE PLATFORM IS RELATIVELY SQUARE, SPAN JOISTS PARALLEL TO ROOF JOISTS.

ROOF MECH. EQUIP. PLATFORM 7

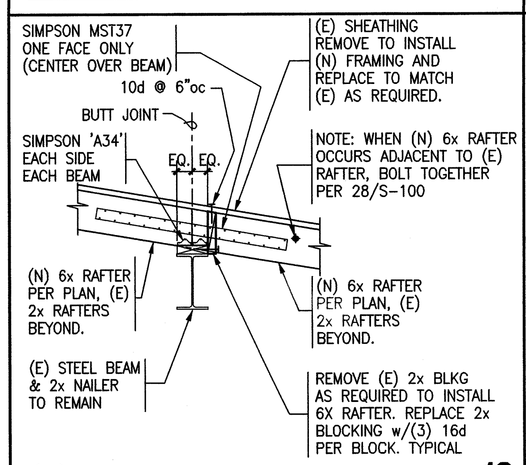

(N) 6x RAFTER @ BUILDING E 18

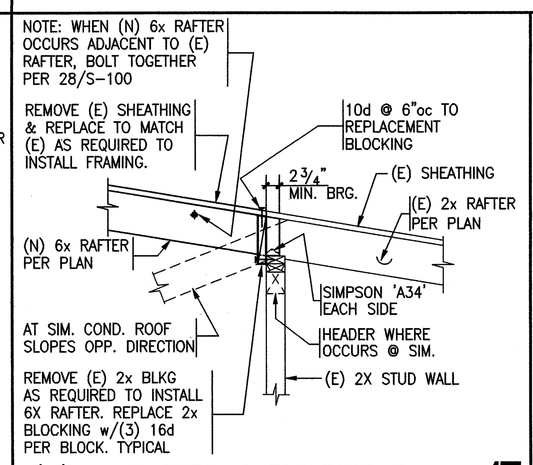

(N) 6x RAFTER @ BUILDING E 17

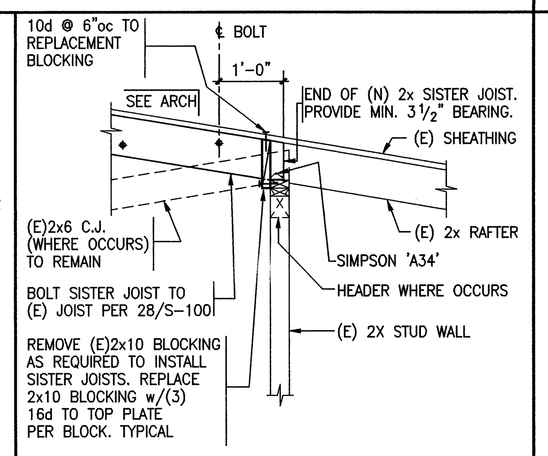

SISTER DETAIL @ RELO BUILDINGS 16

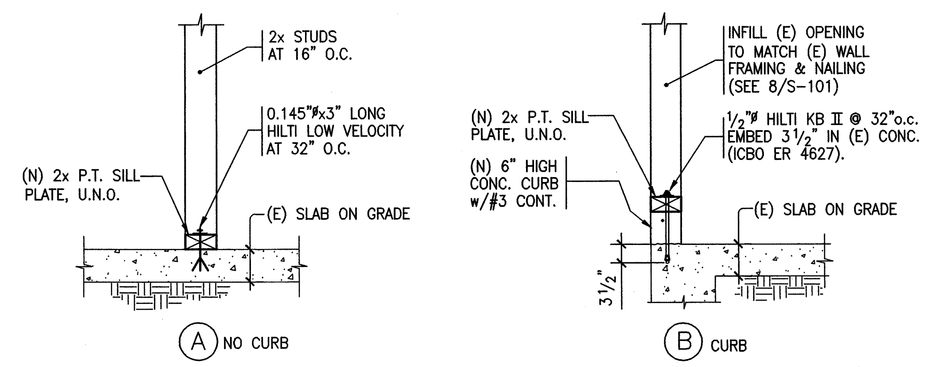

TYPICAL NON-BEARING PARTITION ANCHORAGE AT SILL 14

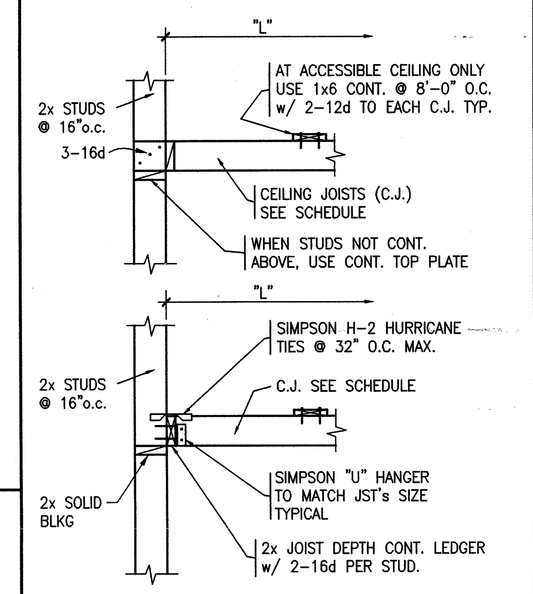

CEILING JOIST SCHEDULE	
CLEAR SPAN "L"	JOIST SIZE & SPACING
8'-0" OR LESS	2x4 @ 16"
8'-0" TO 14'-0"	2x6 @ 16"
14'-0" TO 18'-0"	2x8 @ 16"

NOTE:
WHERE CEILING JOIST SPAN IS GREATER THAN SHOWN IN THE SCHEDULE USE HANGERS PER CEILING HANGER DETAIL 6/S-100 TYPICAL.

TYPICAL CEILING JOIST DETAILS AND CEILING JOIST SCHEDULE 19

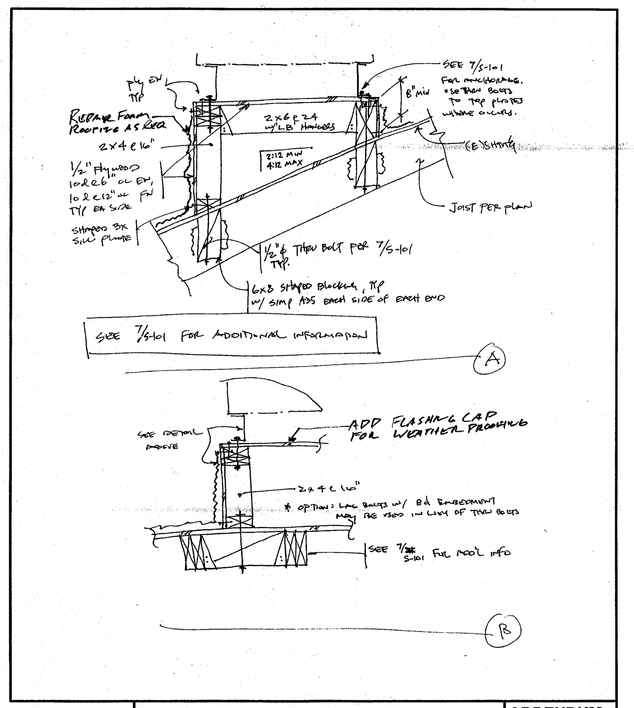

ORDIZ MELBY ARCHITECTS INC.

AC PLATFORM DTL	ADDENDUM DRAWING ADD-011
PROJECT FOR: BAKERSFIELD CITY SCHOOL DISTRICT 1300 BAKER ST BAKERSFIELD CA 93301	JOB NUMBER 2002-480
	DATE

1/ADD #5 Sheet S-101 Detail #7 "Roof Mechanical Equipment Platform" Refer to Addendum Drawing ADD-011 for roofs beyond 2:12. Omit reference to roofs 2:12 or less platforms not needed.

ORDIZ MELBY ARCHITECTS, INC.
5500 MING AVENUE SUITE 280
BAKERSFIELD, CALIFORNIA 93309
TELEPHONE (661) 832-5258
FACSIMILE (661) 832-4291

LICENSED ARCHITECT REGISTERED PROFESSIONAL ENGINEER STATE OF CALIFORNIA

DANNY E. ORDIZ, AIA ARCHITECT C-14,728
WILLIAM J. MELBY, AIA ARCHITECT C-16,835

CONSULTANT

REGISTERED PROFESSIONAL ENGINEER STRUCTURAL STATE OF CALIFORNIA

MARTIN & HB Structural Engineers
1212 S. FLOWER STREET, LOS ANGELES 90015
(213) 744-1414 JOB NO. 2002.572

IDENTIFICATION STAMP
DIVISION OF STATE ARCHITECT
OFFICE OF REGULATION SERVICES

APPL. 03-107003
FILE #'15-6

AC ____ FLS ____ SS ____
DATE JAN 2 6 2004

MODERNIZATION AT CURRAN MIDDLE SCHOOL FOR:

BAKERSFIELD CITY SCHOOL DISTRICT

1116 LYMRIC WAY
BAKERSFIELD
CALIFORNIA
93309

BUILDING KEY PLAN

MARK	DATE	DESCRIPTION
SD	XX/XX/XX	XXXX
CD		
1		
2		
3		
4		

JOB NUMBER:
2002480
CAD DRAWING FILE:
2002572\XXXXXXX
DRAWN BY:
TL/MXG
CHECKED BY:
S&F.

CHECK AND VERIFY ALL DIMENSIONS BEFORE PROCEEDING WITH THE WORK. REPORT DESCREPANCIES TO THE ARCHITECT.

THE DRAWINGS, IDEAS, AND DESIGNS REPRESENTED ON THIS SHEET ARE THE PROPERTY OF THE ARCHITECT.

COPYRIGHT
ORDIZ-MELBY ARCHITECTS, INC. 2002

SHEET TITLE
TYPICAL DETAILS

SHEET IDENTIFICATION NUMBER
S-101

SHEET OF