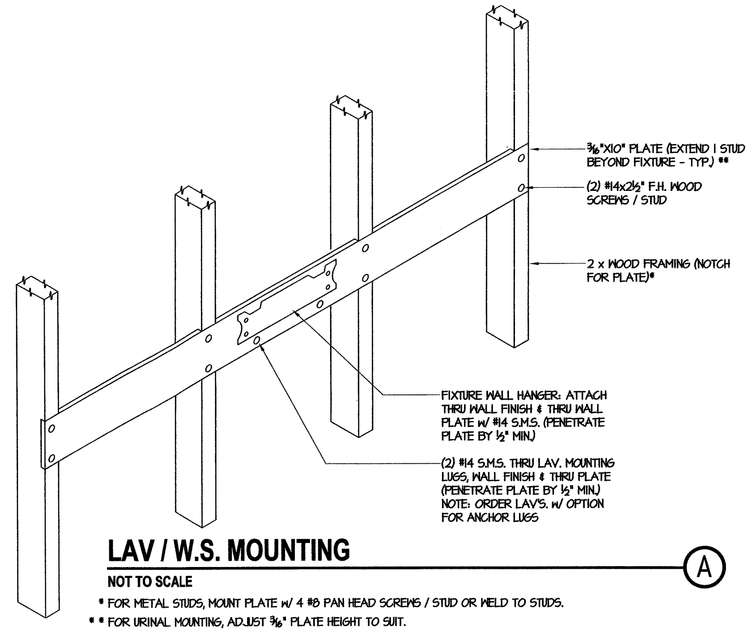

LAV / W.S. MOUNTING (A)

NOT TO SCALE

* FOR METAL STUDS, MOUNT PLATE w/ 4 #8 PAN HEAD SCREWS / STUD OR WELD TO STUDS.
* * FOR URINAL MOUNTING, ADJUST ⅜" PLATE HEIGHT TO SUIT.

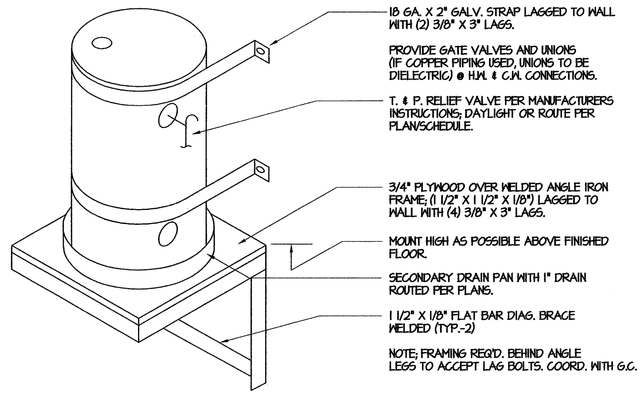

EWH MOUNTING DETAIL (B)

NOT TO SCALE

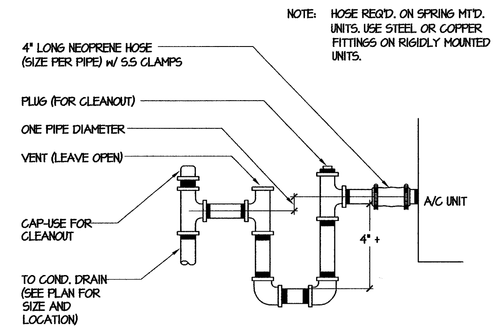

CONDENSATE DRAIN (C)

NOT TO SCALE

NOTES:

ALL BRACING OF DUCTS AND PIPINGS SHALL BE INSTALLED IN ACCORDANCE WITH SMACNA GUIDELINES AS APPROVED BY DSA.

WHERE BRACING DETAILS ARE NOT SHOWN ON THE DRAWINGS OR IN THE GUIDELINES, THE FIELD INSTALLATION SHALL BE SUBJECTED TO THE APPROVAL OF THE ARCHITECT, MECHANICAL ENGINEER AND DSA FIELD ENGINEER.

A COPY OF THE GUIDELINES PUBLISHED BY SMACNA AND APPROVED BY DSA SHALL BE PROVIDED BY THE CONTRACTOR AND KEPT ON THE JOB AT ALL TIMES.

THE SEISMIC ANCHORAGE OF MECHANICAL AND ELECTRICAL EQUIPMENT SHALL CONFORM TO C.C.R. TITLE 24, 2001 CBC, SECTION 1632A AND TABLE 16A-O. ANCHORAGE DETAILS FOR ROOF / FLOOR MOUNTED EQUIPMENT SHALL BE SHOWN ON PLANS.

LIST OF 2001 CALIFORNIA CODE OF REGULATIONS

APPLICABLE CODES AS OF NOVEMBER 1st, 2002

2001 California Building Standards Administrative Code, Part 1, Title 24 C.C.R.
2001 California Building Code (CBC), Part 2, Title 24 C.C.R.
(1997 Uniform Building Code volumes 1-3 and 2001 California Amendments)

2001 California Plumbing Code (CPC), Part 5, Title 24 C.C.R.

2001 California Referenced Standards, Part 12, Title 24 C.C.R.

PLUMBING FIXTURE SCHEDULE

WC-1	Floor mounted F.V. accessible water closet, "Kohler" #4302 Highcrest, 16½" rim height, "Olsonite" #OCC open-front white seat, bolt caps, "Sloan Royal" # III-1.5 flush valve, (1.6 gallons/flush) 14" C.H., 4" S. & 14, 2" V.O., (see plan for trap primer accessory)
WC-2	Floor mounted F.V. elongated water closet, "Kohler" #K-4350 Wellcomme, "Olsonite" # 10CC open-front white seat, bolt caps, "Sloan Royal" # III-1.5 flush valve, (1.6 gallons/flush) 14" C.H., 4" S. & 14, 2" V.O., (see plan for trap primer accessory)
UR	Wall mounted accessible urinal, "Kohler" # K-4960-ET Bardon, "Sloan Royal" # 186-1 flush valve, wall hanger, see architectural drawings for mounting heights, 14" C.H., 2" H., 2" H.C.O., 1½" V.O.
L-1	Wall hung cast iron accessible lavatory, "Commercial Enameling" # 551 (20" x 18"), "Pro-Flow" # PFH60 offset grid drain, three hole punch for "Chicago" metering cold water faucet # 3400 CP, (1) angled wall stop with supply, 17 ga. C.P. trap/tailpiece, 1½" C.H., 2" H., 1½" V.O., 2" H.C.O., provide modification "B" (anchor lugs) and mount per detail on plans.
L-2	Wall hung cast iron accessible lavatory, "Commercial Enameling" # 551 (20" x 18") "Pro-Flow" # T123.018 offset grid drain, "Chicago" slow-closing hot/cold faucet # 3300 CP, (2) angled wall stops with supplies, 17 ga. C.P. trap/tailpiece, (wrap H.W. and trap/tailpiece per specifications) 1½" H.W./C.W., 2" H., 1½" V.O., 2" H.C.O., provide modification "B" (anchor lugs) and mount per detail on plans.
S-1	Counter mounted stainless steel accessible classroom sink, "Kewe" # 4210 with # 5510LF gooseneck faucet and # 5054LF bubbler, integral strainer / grid drain, (2) angled wall stops with supplies, 3/8" tubing from each stop to bubbler and faucet, 17 ga. C.P. trap/tailpiece, 1½" C.H., 2" H., 1½" V.O.,
S-2	Counter mounted 18 ga. stainless steel (25"x21"x6 ½") accessible single bowl sink, "Elkay" # LRAD2521, # LK99 strainer, "Chicago" #1186-E3CP faucet with 4" wristblade handles and gooseneck spout, (2) loose key angled wall stops with supplies, 17 ga. C.P. trap/tailpiece, 1½" H.W./C.W., 2" H., 1½" V.O., 2" H.C.O., wrap trap/tailpiece per spec's.)
HB-1	Wall mounted bent nose brass loose tee key hose bibb, "Woodford" # 24P with integral vacuum breaker, ¾" C.H.,
HB-2	Riser mounted hose bibb, "Woodford" # Y24 with integral vacuum breaker and loose tee key handle, ¾" C.H.,
FD	Cast iron floor drain, "J.R. Smith" # 2005 with 5" dia. bronze grate, 2" trap with primer connection, 2" H., 1½" V.O.,
IM	Ice maker wall box with valve and water hammer arrestor, "Specialty Products" # 08-811, 1/2" C.H., ¼" coiled tubing for connection.
TP	Trap primer, "PPP" products in wall access panel with 1½" C.H. in, manifold as required to multiple drains, see plan.
DF-1	Wall mounted dual bubbler accessible drinking fountain, "Kewe" # 1441, # 6710 mounting plate, cast aluminum with white epoxy finish, push button operation, 17 ga. C.P. trap/tailpiece, (1) angled wall stop with supply(ies) to each bubbler, 2" H., 1½" V.O.,
DF-2	Dual (hi-lo) wall mounted accessible drinking fountain, "Kewe" # 1191.14, #6700.4 mounting plate, satin finish 14 ga. stainless steel, push button operation, (2) 17 ga. C.P. trap/tailpiece, (2) angled wall stops with supply to each bubbler, 2" H., 1½" V.O., 1½" C.H.
WS	Wash Sink, "Commercial Enameling" # 204 wall hung (48"x17"), 2 user, (2) "Chicago" # 65 backsplash mounted C.P. dual handle faucets, (connect cold side only), C.P. grid strainer, (2) soap dishes, C.P. 17 ga. trap/tailpiece, ¾" C.H. with individual stops for faucets, 2" H., 1½" V.O., 2" H.C.O., (blank-off all unused fixture tappings)
EDF-1	Wall mounted dual electric accessible drinking fountain, "Kewe" # HMBFA8L, 1/6th H.P. @ 120v.-1ph., (1) angle wall stop with supply, 17 ga. C.P. trap/tailpiece, 2" H., 1½" V.O., 1½" C.H.
EWH-1	Electric water heater, "A.O. Smith" # ELSF-15, 15 gallon glass lined tank, (1) 1500 Watt element @ 120v.-1ph., T.&P. relief valve with full size discharge to outside with elbow down at 6" above grade, ¾" C.H. to and H.W. from, (#11 #)

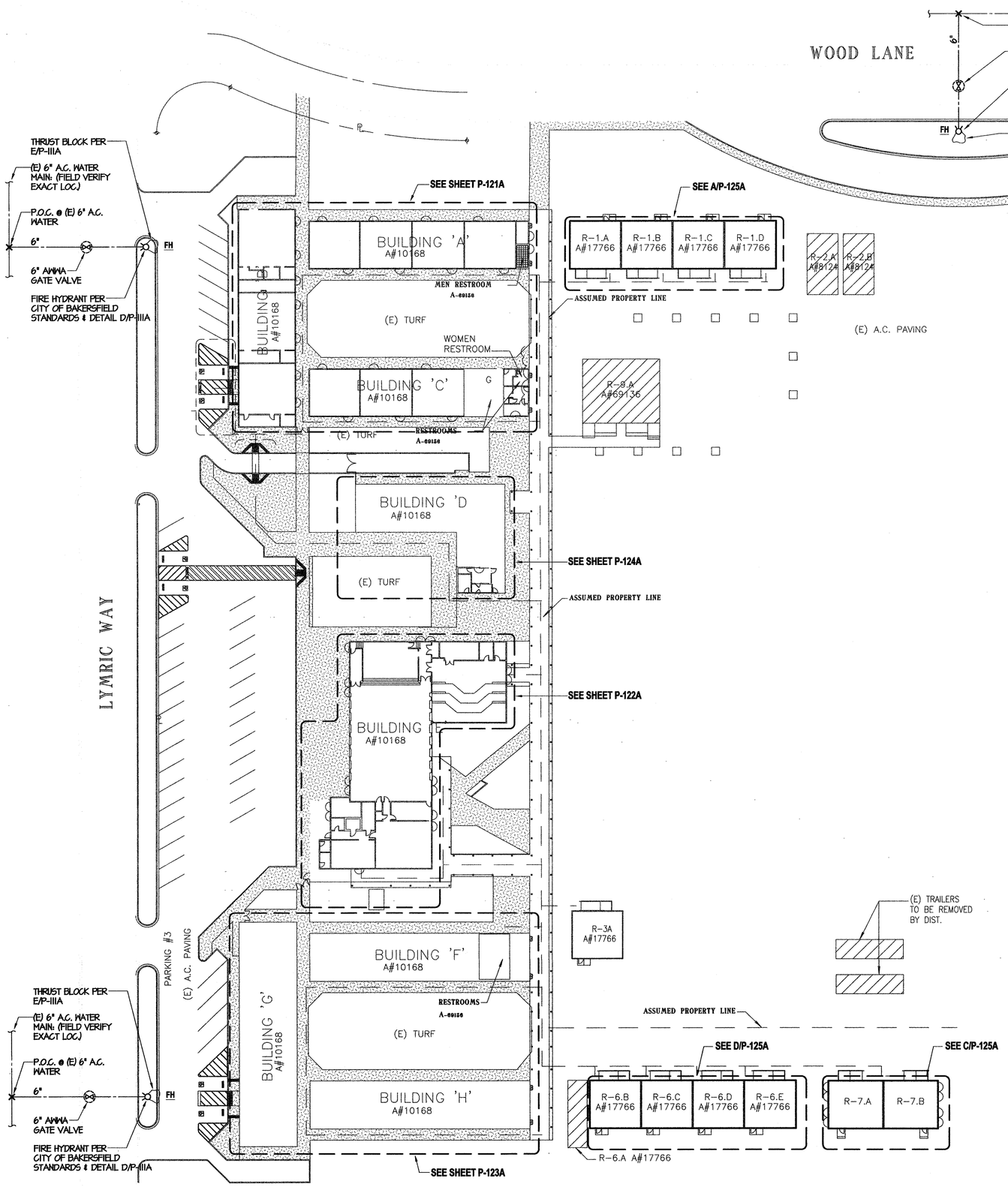

PLUMBING SITE PLAN

SCALE: 1"=40'-0"

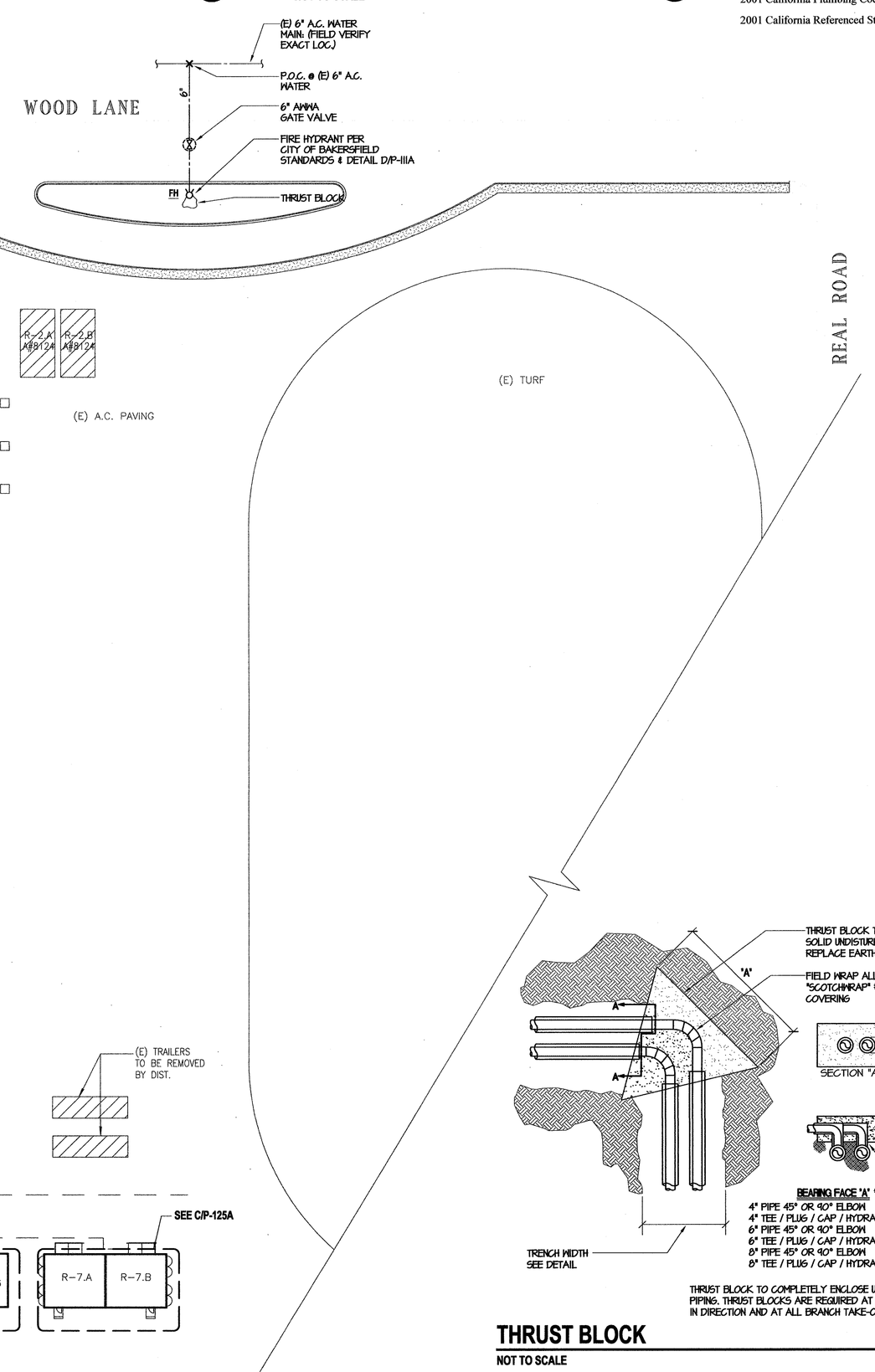

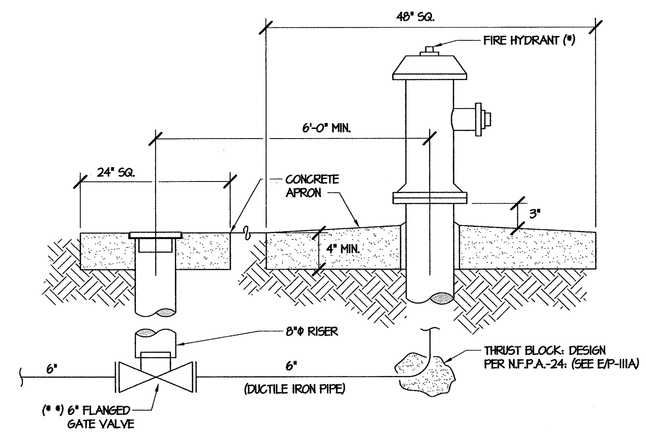

(*) FIRE HYDRANT PER "CITY OF BAKERSFIELD" STD'S.
(* *) "MUELLER" 6" FLANGED GATE VALVE.

FIRE HYDRANT DETAIL (D)

NOT TO SCALE

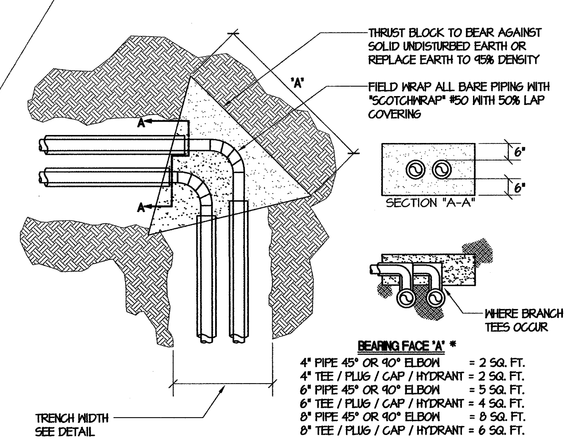

BEARING FACE 'A' *

4" PIPE 45° OR 90° ELBOW	= 2 SQ. FT.
4" TEE / PLUG / CAP / HYDRANT	= 2 SQ. FT.
6" PIPE 45° OR 90° ELBOW	= 5 SQ. FT.
6" TEE / PLUG / CAP / HYDRANT	= 4 SQ. FT.
8" PIPE 45° OR 90° ELBOW	= 8 SQ. FT.
8" TEE / PLUG / CAP / HYDRANT	= 6 SQ. FT.

THRUST BLOCK TO COMPLETELY ENCLOSE UNINSULATED PIPING. THRUST BLOCKS ARE REQUIRED AT EVERY CHANGE IN DIRECTION AND AT ALL BRANCH TAKE-OFFS

THRUST BLOCK (E)

NOT TO SCALE

* THRUST BLOCK BEARING SURFACES SHOWN BASED ON NFPA-24 FOR 2000 lb/ft² SOIL RESISTANCE & 225 P.S.I. WATER PRESSURE. FOR OTHER CONDITIONS, CALCULATE PER NFPA-24.

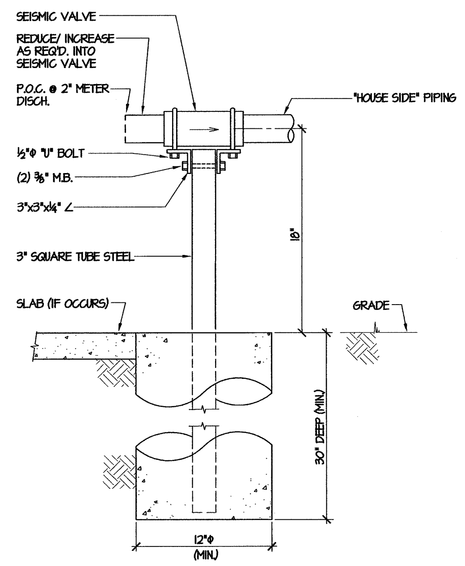

SEISMIC VALVE SUPPORT (F)

NOT TO SCALE

INSTALL SEISMIC GAS SHUT OFF VALVE ON EXISTING GAS MAIN ON THE LOW PRESSURE SIDE OF THE EXISTING GAS METER. USE "KOSO" CALIFORNIA SEISMIC GAS SHUT OFF VALVE #314

REGISTERED PROFESSIONAL ENGINEER MARK JAMES BAUNGER No. M006578 C Exp. 9-30-08 MECHANICAL STATE OF CALIFORNIA

ORDIZ MELBY ARCHITECTS, INC.
5500 MING AVENUE SUITE 280
BAKERSFIELD, CALIFORNIA 93309
TELEPHONE (661) 832-5252
FACSIMILE (661) 832-4291

LICENSED ARCHITECT WILLIAM JOHN MELBY No. C-16835 DEC. 31 2007 RENEWAL TYPE STATE OF CALIFORNIA

DANNY E. ORDIZ, A.I.A.
ARCHITECT C-14,728
WILLIAM J. MELBY, A.I.A.
ARCHITECT C-16,835

CONSULTANT

MDC MECHANICAL DESIGN CONCEPTS
428 Truxtun Avenue
Bakersfield, Ca. 93301
Tel #: (661) 326-1313
Fax #: (661) 326-1089

#02089 PLOTTED: 11-1-07

IDENTIFICATION STAMP
DIVISION OF THE STATE ARCHITECT
OFFICE OF REGULATION SERVICES
APPL. # 03-107003
FILE # 15-6
AC ____ FLS ____ SS ____
DATE ____

MODERNIZTION FOR CURRAN JUNIOR HIGH SCHOOL FOR:

BAKERSFIELD CITY SCHOOL DISTRICT

1116 LYMRIC WAY
BAKERSFIELD, CALIFORNIA
93309

MARK	DATE	DESCRIPTION
SD		
CD		
△		
△		
△		
△		

JOB NUMBER: 2002480
CAD DWG FILE:

DRAWN BY: MA
CHECKED BY: RB

CHECK AND VERIFY ALL DIMENSIONS BEFORE PROCEEDING WITH THE WORK. REPORT DISCREPANCIES TO THE ARCHITECT.

THE DRAWINGS, IDEAS AND DESIGNS REPRESENTED ON THIS SHEET ARE THE PROPERTY OF THE ARCHITECT.
COPYRIGHT
ORDIZ-MELBY ARCHITECTS, INC. 2000

SHEET TITLE
PLUMBING SITE PLAN, SCHED. & DETAILS

SHEET IDENTIFICATION NUMBER
P-111A

SHEET 1 OF 6