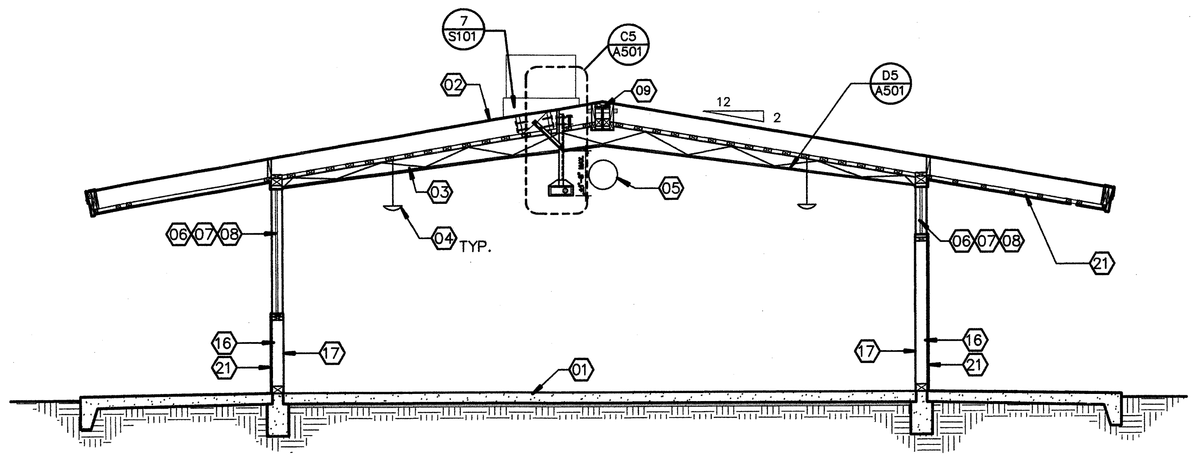

E1 TYP. CLASSROOM SECTION - BUILDINGS A, C, F & H

1/4"=1'-0" 0' 2' 4' 8'

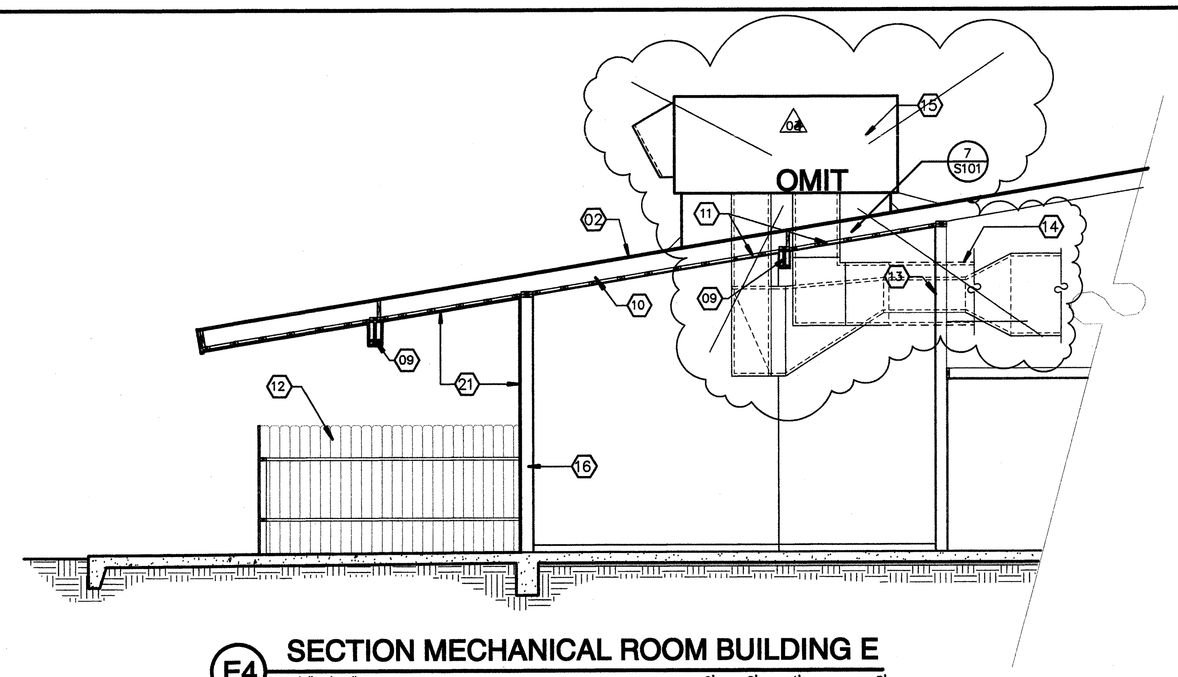

E4 SECTION MECHANICAL ROOM BUILDING E

1/4"=1'-0" 0' 2' 4' 8'

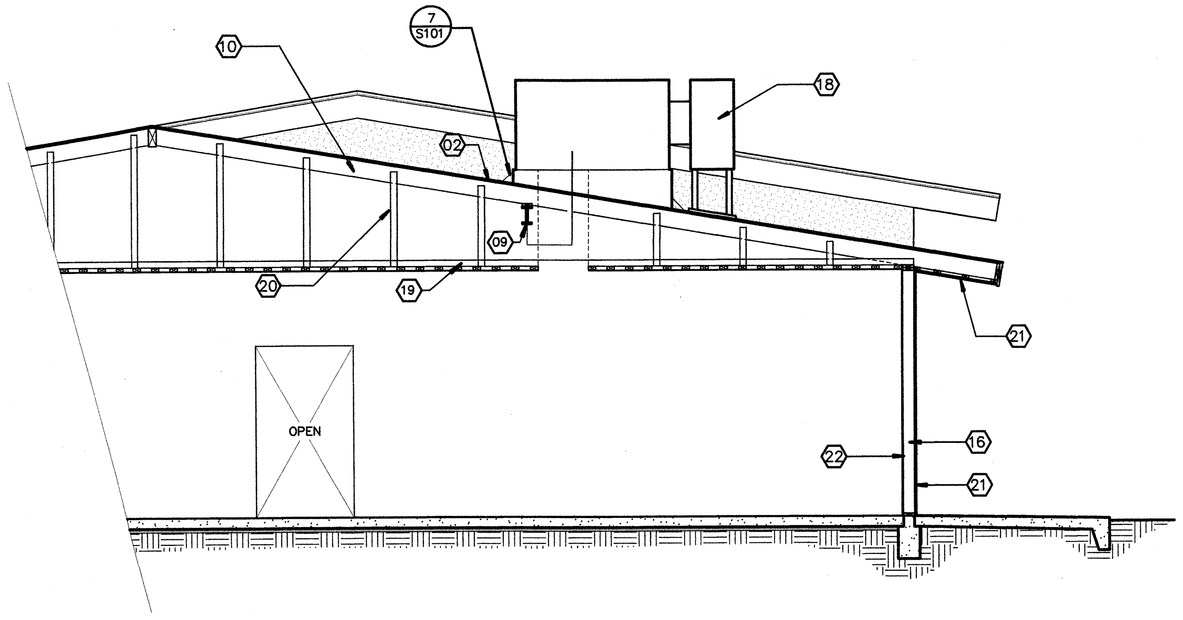

C1 SECTION KITCHEN BUILDING E

1/8"=1'-0" 0' 2' 4' 8'

Item No. 22: Refer to Sheet A-301
Add #4
Section "E4" Omit HVAC installation and duct work. "A1 Partial Floor Plan" Revise to read. "Partial Floor Plan Building "C". Add door indicator 14.C to Girl's Restroom and 15.C to Boy's Restroom. "A3 Partial Floor Plan" Revise to read. "Partial Floor Plan Building "F". Add door indicator 13.F to Boy's Restroom and 14.F to Girl's Restroom. Interior Elevation "A5" add hand dryer on Elevation "B" center of wall at +40" A.F.F. to center of controls, coordinate with electrical drawings typical. Delete Keynote #11, #13, #15, & #25. Revise Keynote #23 to read. "See detail 17-S100 and 14B S-101 for wall condition requirements." Revise Keynote #26 to read. "Xlerator hand dryer XL-W with ADA Compliant recess kit see elevations for mounting requirements and electrical for electrical requirements." Delete Keynote #27. Revise Keynote #28 to read. "Soap dispensers see elevations for further requirements." Add Keynote #30 "See detail B5/A-501 for all mounting heights." Add Keynote #31 "New ceramic tile color per architect." Add Keynote #32 "Sanitary cove base."

Item No. 7: Refer to Sheet A-301, Addendum drawing ADD-008 and Addendum drawing ADD-008.3, floor plans. Section reference 14B/S-101 and 17/S-100 were given per addendum 005. Replace this section reference with addendum drawing ADD-017. Replace addendum drawing ADD-008.1 with Addendum drawing ADD-023. Replace Addendum Drawing ADD-008.4 with Addendum Drawing ADD-023.1
Add #7

2. Sheet A-301 Replace "Partial Floor Plan Building "C" with Addendum Drawing ADD-008. Replace "Partial Floor Plan Building "F" with Addendum Drawing ADD-008.3 Replace"Interior Elevations Boys Girls Building "C", "F" similar with Addendum Drawings ADD-008.1 & ADD-008.4.
Add #5

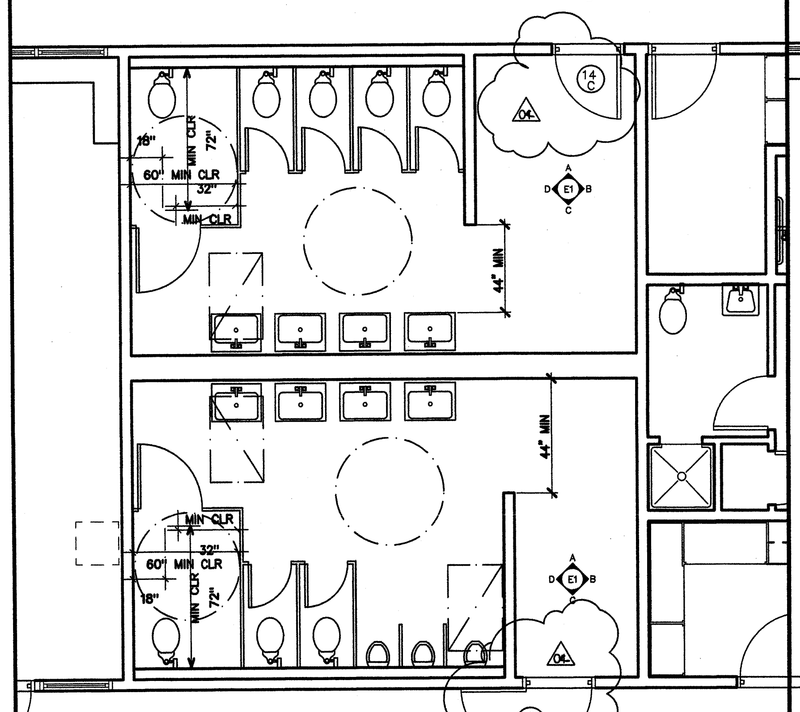

A1 PARTIAL FLOOR PLAN BUILDING 'C'

1/8"=1'-0" SEE DETAIL B5/A-501 FOR ALL MOUNTING HEIGHTS

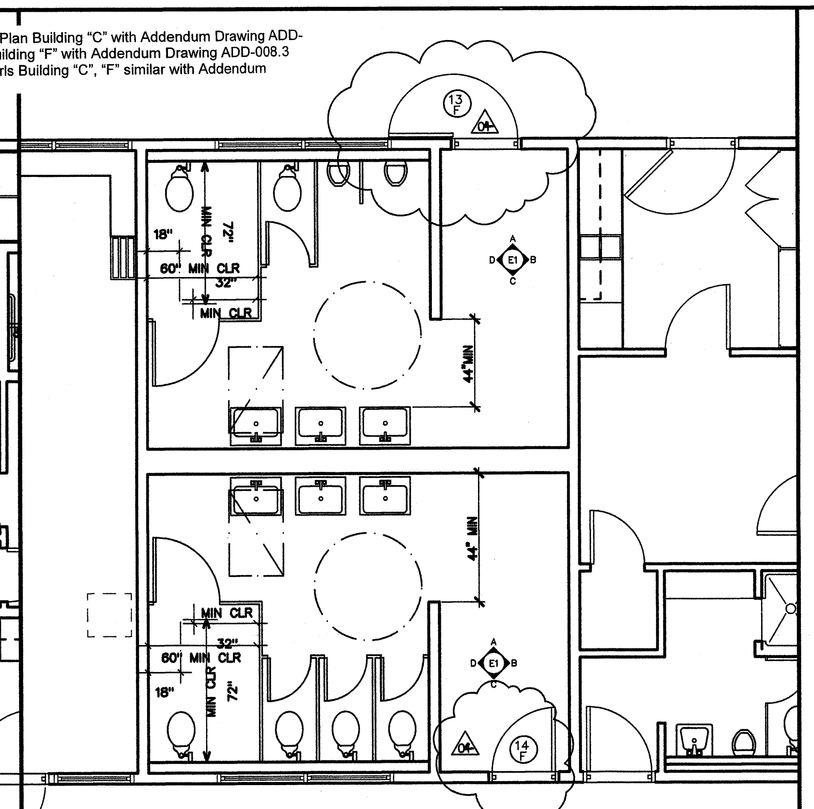

A3 PARTIAL FLOOR PLAN BUILDING 'F'

1/8"=1'-0" SEE DETAIL B5/A-501 FOR ALL MOUNTING HEIGHTS

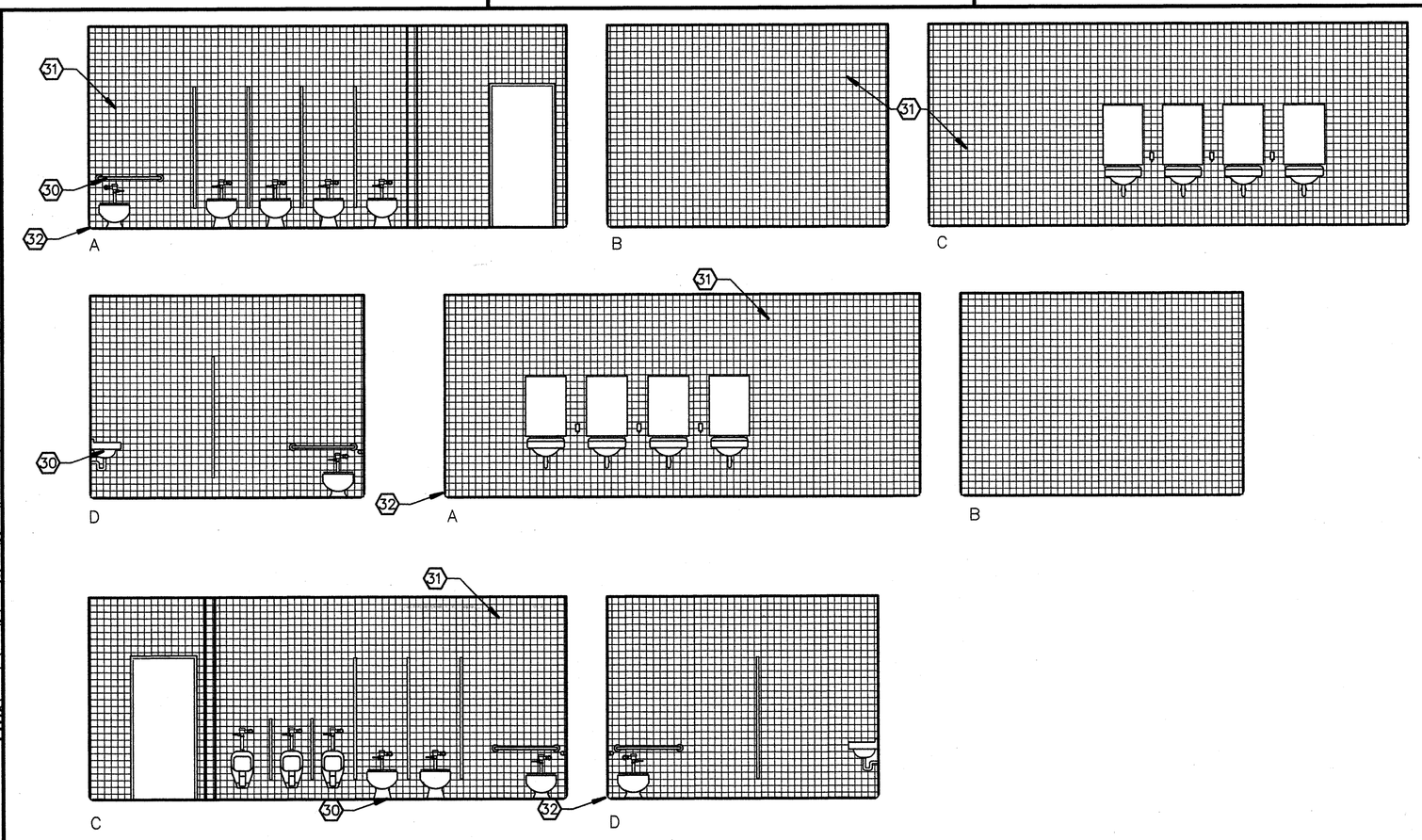

A5 INTERIOR ELEVATIONS BOYS GIRLS BUILDING C, F SIMILAR

1/4"=1'-0"

00 KEYNOTES

THIS SHEET ONLY

01 PROVIDE/INSTALL RESILIENT TILE FLOORING W/RTSB, PROVIDE TRANSITION STRIPS BETWEEN FLOOR FINISH CHANGES (WHERE OCCURS).

02 PATCH (E) FOAM ROOFING AS REQUIRED FOR INSTALLATION OF (N) HVAC UNIT

03 REMOVE (E) SUSPENDED CEILING GRID SYSTEM, PROVIDE/INSTALL ACOUSTIC "T"-BAR CEILING, SEE MECHANICAL FOR SUPPLY & RETURN AIR REGISTERS WHERE OCCURS.

04 REMOVE (E) PENDANT LIGHTING, PROVIDE/INSTALL LIGHTING AS PER ELECTRICAL DWGS. (LIGHT FIXTURES TO COMPLY W/CBC TABLE 16 A-O, FOOTNOTE #25.

05 (E) HVAC DUCTING TO REMAIN, PREP AS REQUIRED-PAINT.

06 ● WINDOWS CLEAN/PRIME TUBE STEEL MULLIONS-PAINT

07 ● WINDOWS CLEAN/PRIME PAINTED METAL WINDOW FRAME-PAINT

08 ● WINDOWS CLEAN/PRIME WOOD TRIM (JAMB/SILL/HEAD WH/OCCURS)-PAINT.

09 EXISTING STEEL BEAM TO REMAIN

10 EXISTING 2 x 10 R.R @ 24" O.C. TO REMAIN

~~11 CUT OPENING FOR SUPPLY/RETURN DROPS FOR (N) HVAC ON ROOF. PATCH CEILING FINISH MATCH FINISH, SEE STRUCTURAL DWG'S DTL. 23/S100, 7/S101 & PARTIAL ROOF FRAMING PLAN S/201. SEE MECHANICAL DWG'S.~~ Add #2

12 EXISTING FENCING TO REMAIN

~~13 (E) DUCT OPENING TE SUPPLY AIR FROM HVAC ON ROOF SEE MECHANICAL~~ Add #2

14 CUT OPENING AND FRAME FOR RETURN AIR DUCT IN NON-BEARING WALL SEE MECHANICAL DWGS. PATCH AND MATCH WALL FINISHES AS REQUIRED

~~15 PROVIDE / INSTALL HVAC UNIT W/ FACTORY METAL CURB ON ROOF PROVIDE 6x SOLID WOOD BLOCKING BELOW UNIT & ANCHOR THE UNIT & BLOCKING PER DETAIL 7/S-101. SEE MECHANICAL DWG'S. SEE MECHANICAL DWG'S. PATCH FOAM ROOF AS REQUIRED.~~ Add #2

16 (E) 2 X 6 @ 16" O.C. TO REMAIN.

17 (E) 1/2" PLYWOOD TO REMAIN-PREP AS REQUIRED-PAINT

18 REMOVE (E) EVAP. COOLER PROVIDE INSTALL MUA UNIT ON ROOF-TO TIE - IN TO (E) EXHAUST HOOD IN KITCHEN SEE MECH & STRUCTURAL DWG'S FOR CURB MOUNTING DETAILS & CURB MOUNTING REQUIREMENTS. PATCH FOAM ROOFING AS REQUIRED.

19 (E) 2 X 4 C.J. @ 24" O.C. W/ 2X3 STRIPPING @ 16" O.C. W/ GLUE-ON 12" X 12" ACOUSTIC TILE.

20 (E) 1X4 HANGER TO REMAIN.

21 (E) STUCCO PLASTER-PREP/AS REQUIRED-PAINT.

22 (E) 3/4" PLASTER-PREP/PATCH AS REQUIRED.

23 SEE DETAIL 17-S100 AND 14B S-101 FOR WALL CONDITION REQUIREMENTS Add #2

24 SEMI RECESSED TOILET PAPER DISPENSER BOBRICK 3888 OR EQUAL

~~25 TOILET SEAT COVER DISPENSER~~ Add #2

26 XLERATOR HAND DRYWE XL-W WITH ADA COMPLIANT RECESS KIT SEE ELEVATIONS FOR MOUNTING REQUIREMENTS AND ELECTRICAL FOR ELECTRICAL REQUIREMENTS

00 KEYNOTES

THIS SHEET ONLY

~~27 SANITARY NAPKIN DISPENSER~~ OMIT Add #2

28 SOAP DISPENSER SEE ELEVATIONS FOR FURTHER REQUIREMENTS

29 ALL PLUMBING UNDER SINK IS TO BE WRAPPED WITH INSULATIVE TAPE TYP.

30 SEE DETAIL B5/A501 FOR ALL MOUNTING HEIGHTS

31 NEW CERAMIC TILE PER ARCHITECT

32 SANITARY COVE BASE Add #2

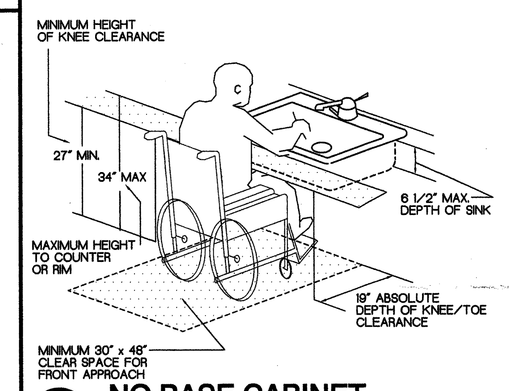

C6 NO BASE CABINET

ALL PLUMBING IS TO BE WRAPPED WITH INSULATIVE TAPE TYP.

ORDIZ MELBY
ARCHITECTS, INC.
5500 MING AVENUE SUITE 280
BAKERSFIELD, CALIFORNIA 93309
TELEPHONE (661) 832-5258
FACSIMILE (661) 832-4291

LICENSED ARCHITECT WILLIAM JOHN MELBY No. C- 16835 DEC. 31 2007 REGISTRAL DATE STATE OF CALIFORNIA

DANNY E. ORDIZ, AIA
ARCHITECT C-14,728
WILLIAM J. MELBY, AIA
ARCHITECT C-16,835
CONSULTANT

IDENTIFICATION STAMP
DIVISION OF STATE ARCHITECT
OFFICE OF REGULATION SERVICES

APPL. 03-107003
FILE # 15-6

AC _____ FLS _____ SS _____

DATE _____

MODERNIZATION AT CURRAN MIDDLE SCHOOL FOR:

BAKERSFIELD CITY SCHOOL DISTRICT

1116 LYMRIC WAY
BAKERSFIELD
CALIFORNIA
93309

BUILDING KEY PLAN

MARK	DATE	DESCRIPTION
SD		
CD		
01	08/23/07	ADDENDUM 1
02	09/11/07	ADDENDUM 2
03	11/01/07	ADDENDUM 3

JOB NUMBER:
2002480
CAD DRAWING FILE:
12:44 PM
DRAWN BY:
TT
CHECKED BY:
MKB

CHECK AND VERIFY ALL DIMENSIONS BEFORE PROCEEDING WITH THE WORK. REPORT DISCREPANCIES TO THE ARCHITECT.

THE DRAWINGS, IDEAS, AND DESIGNS REPRESENTED ON THIS SHEET ARE THE PROPERTY OF THE ARCHITECT.

COPYRIGHT
ORDIZ-MELBY ARCHITECTS, INC. 2002

SHEET TITLE
SECTIONS BUILDINGS A,C,E,F&H & ENLARGED PLANS R.R.S BUILD C & F

SHEET IDENTIFICATION NUMBER
A-301

PLOT TIME: 12:44 PM
PLOT DATE: 11-2-2007
PATH NAME: 12:44 PM
PLOT SCALE: 1/4" = 1'-0"