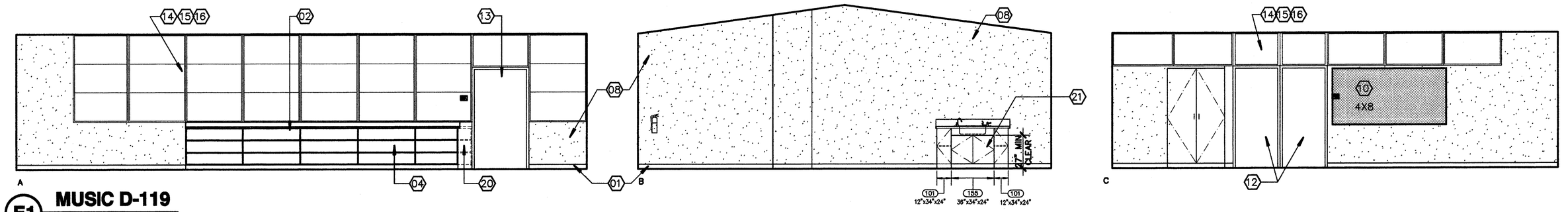

E1 MUSIC D-119
1/4"=1'-0"

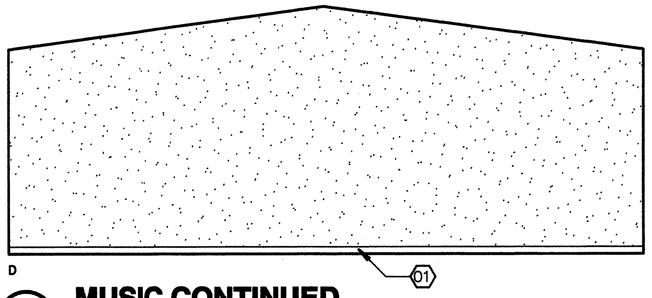

D1 MUSIC CONTINUED
1/4"=1'-0"

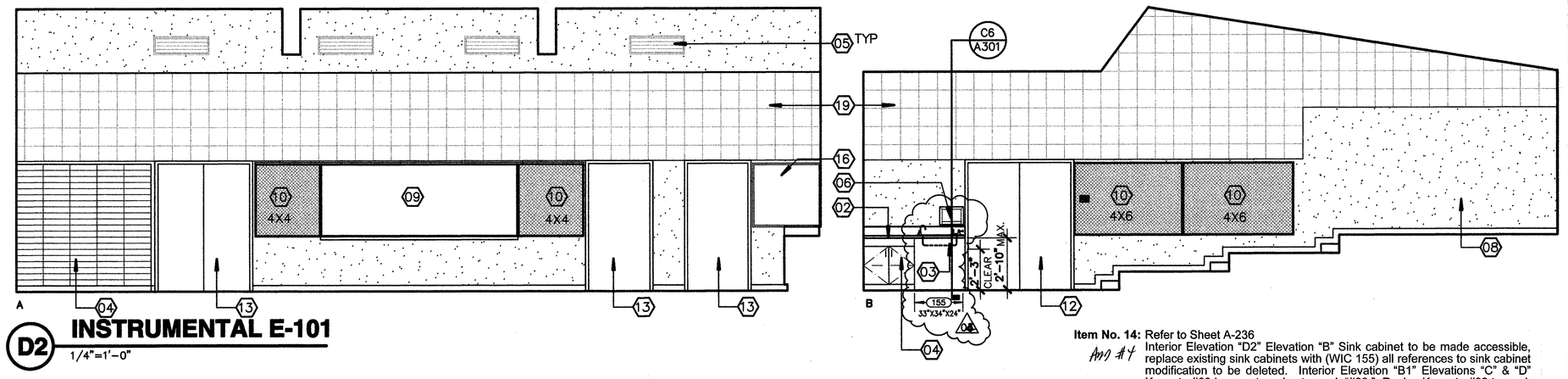

D2 INSTRUMENTAL E-101
1/4"=1'-0"

Item No. 14: Refer to Sheet A-236
App 4 f
Interior Elevation "D2" Elevation "B" Sink cabinet to be made accessible, replace existing sink cabinets with (WIC 155) all references to sink cabinet modification to be deleted. Interior Elevation "B1" Elevations "C" & "D" Keynote #09 incorrect, revise to read. "#08." Revise Keynote #02 to read. "Remove and replace existing counter top with corian countertop with 6" splash (unless noted otherwise) calk to wall typical." Revise Keynote 03 to read. "Replace existing sink cabinet with ADA compliant sink cabinet, typical all sink cabinets." Revise Keynote #4 to read. "Existing cabinet to remain, remove and replace all doors, drawer fronts, & face plates. Finish per specifications." Revise Keynote #21 to read. "Provide and install corian counter top with accessible sink cabinet. Return flooring to wall, wrap supply and waste lines with insulative tape. See plumbing plans for further requirements."

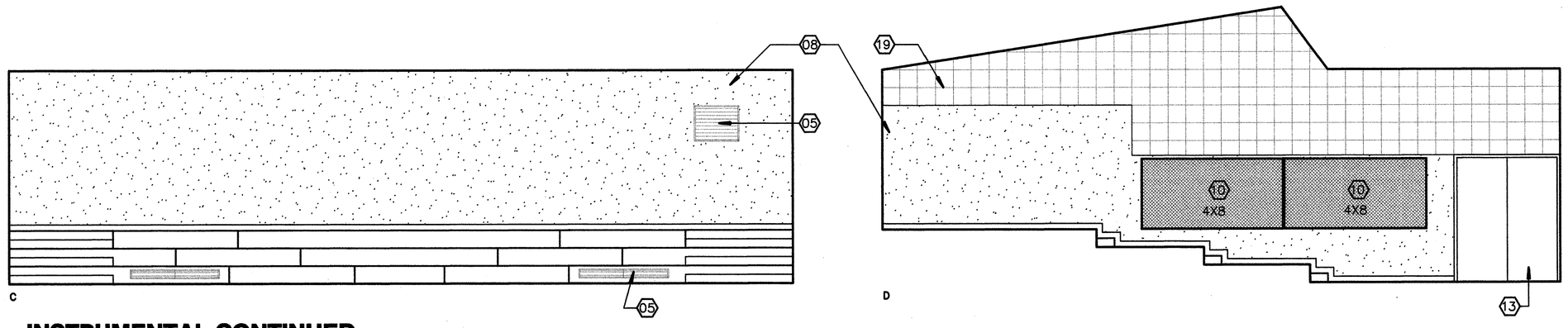

C1 INSTRUMENTAL CONTINUED
1/4"=1'-0"

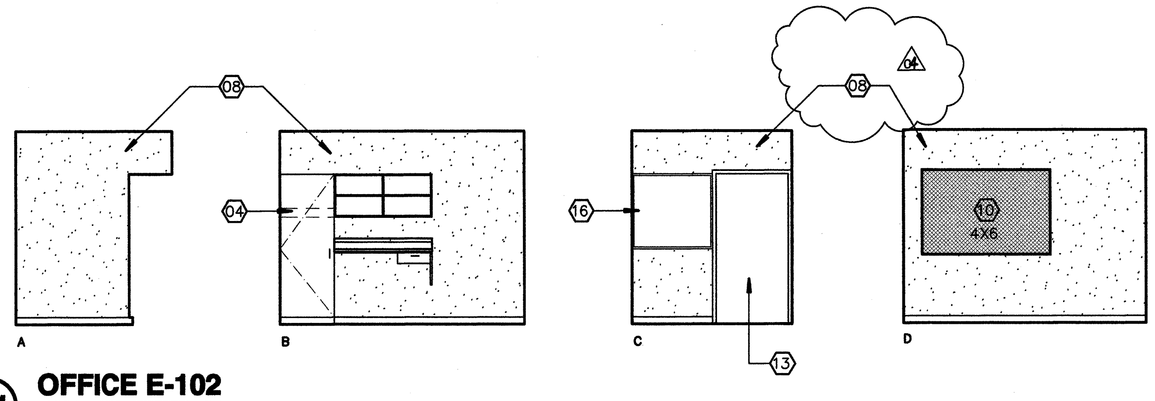

B1 OFFICE E-102
1/4"=1'-0"

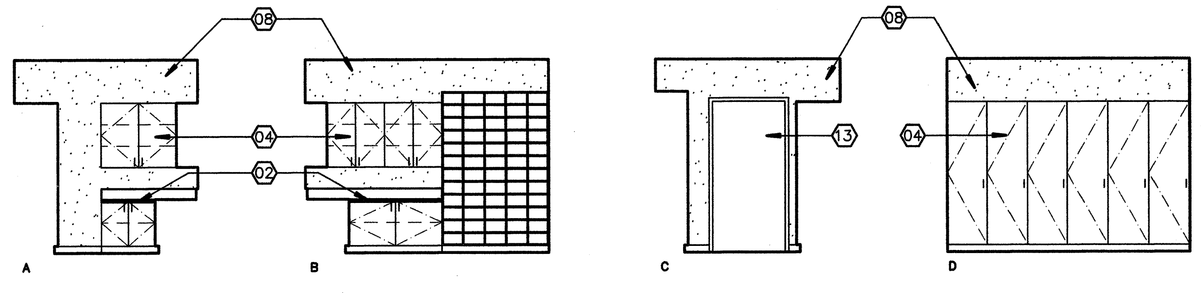

B3 UNIFORMS E-103
1/4"=1'-0"

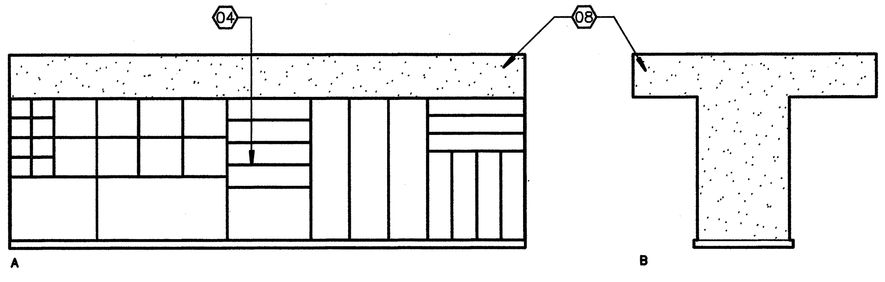

A1 INSTRUMENTS E-104
1/4"=1'-0"

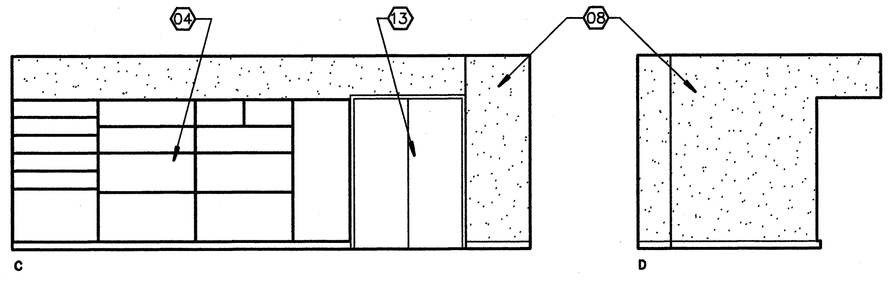

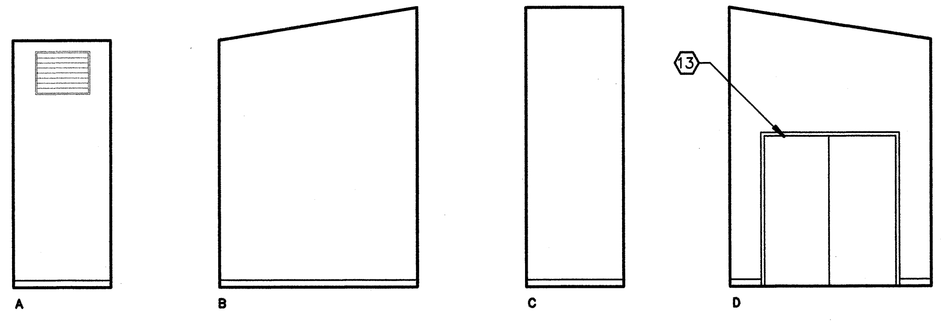

A5 MECHANICAL E-105
1/4"=1'-0" (NO WORK EXCEPT DOOR)

00 KEYNOTES
THIS SHEET ONLY

01 REMOVE (E) RUBBER BASE WHERE OCCURS–PROVIDE/INSTALL RTSB.

02 REMOVE/REPLACE (E) COUNTERTOP W/CORIAN COUNTERTOP W/6" SPLASH, (UNO) CAULK AT WALL.

03 REPLACE EXISTING SINK CABINET WITH ADA COMPLIANT SINK CABINET TYPICAL ALL SINK CABINETS 03

04 (E) CABINET TO REMAIN, REMOVE DOOR AND DRAWER PULLS, SAND ALL SURFACES, (DOORS, DRAWERS, SHELVES, ETC) TO REMOVE BUILT–UP PAINT, FILL DAMAGED AREAS, PREP & PAINT– REINSTALL HARDWARE.

05 CLEAN/PREP/PAINT (E) VENT GRILL.

06 PROVIDE/INSTALL PAPER TOWEL DISPENSER–SEE SPECIFICATIONS.

07 PATCH/FILL DAMAGED WALLS AS REQUIRED, PREP– PAINT (E) PLYWOOD WALLS.

08 PATCH/FILL DAMAGED WALLS AS REQUIRED, PREP– PAINT (E) PLASTER FINISH WALLS.

09 REMOVE/REPLACE CHALK BOARDS W/LIQUID MARKER BOARDS SEE SPECIFICATIONS.

10 REMOVE/REPLACE (E) TACKBOARDS–SEE SPECIFICATIONS SEE DETAIL A6/A–231 FOR MOUNTING REQUIREMENTS

11 REMOVE ABANDON HEATER UNIT, CAP ALL SUPPLY/RETURN LINES BEHIND WALL, REMOVE VENT OPENING @ EXTERIOR WALL. INFILL MATCH 2X FRAMING, INSTALL INSULATION, PATCH–MATCH FINISHES–PAINT.

12 (E) DOOR/FRAME TO REMAIN, REPLACE HARDWARE W/ ACCESSIBLE HARDWARE. SEE DOOR SCHEDULE. SAND PREPARE DOOR SURFACE, PAINT EXTERIORS, RE–STAIN PREVIOUSLY STAINED AREAS WHERE OCCURS.

13 (E) DOOR/FRAME TO REMAIN. SEE DOOR SCHEDULE. SAND PREPARE DOOR SURFACE, PAINT EXTERIORS, RE–STAIN PREVIOUSLY STAINED AREAS WHERE OCCURS.

14 @ WINDOWS CLEAN/PRIME TUBE STEEL MULLIONS–PAINT

15 @ WINDOWS CLEAN/PRIME PAINTED METAL WINDOW FRAME–PAINT

16 @ WINDOWS CLEAN/PRIME WOOD TRIM (JAMB/SILL/HEAD WH/OCCURS)–PAINT.

17 (E) WALL MOUNTED TV/BRACKET TO REMAIN.

18 (E) DISPLAY CASE TO REMAIN–REPLACE CORK LINING, PRIME/PAINT WOOD SURFACE.

19 PAINT (E) 12" X 12" ACOUSTIC WALL TILE.

20 REMOVE PORTION OF (E) BOOKSHELVES, BACKSLASH AND PROVIDE END PANEL–MODIFY AS REQUIRED @ REMAINING DRAWER MATCH WOOD @ CABINETS–PAINT, PATCH WALL AS REQUIRED.

21 PROVIDE/INSTALL CORIAN COUNTER WITH ACCESSIBLE SINK CABINET RETURN FLOORING TO WALL, WRAP SUPPLY/WASTE LINES SEE PLUMBING PLANS. 04

ORDIZ MELBY
ARCHITECTS, INC.
5500 MING AVENUE SUITE 280
BAKERSFIELD, CALIFORNIA 93309
TELEPHONE (661) 832-5258
FACSIMILE (661) 832-4291

LICENSED ARCHITECT WILLIAM JOHN MELBY No. C-16835 DEC. 31 2007 REGISTERED OWNER STATE OF CALIFORNIA

DANNY E. ORDIZ, AIA
ARCHITECT C-14,728
WILLIAM J. MELBY, AIA
ARCHITECT C-16,835
CONSULTANT

IDENTIFICATION STAMP
DIVISION OF STATE ARCHITECT
OFFICE OF REGULATION SERVICES

APPL. 03-107003
FILE # 15-6

AC ____ FLS ____ SS ____
DATE ____

MODERNIZATION AT CURRAN MIDDLE SCHOOL FOR:

BAKERSFIELD CITY SCHOOL DISTRICT

1116 LYMRIC WAY
BAKERSFIELD
CALIFORNIA
93309

BUILDING KEY PLAN

MARK	DATE	DESCRIPTION
SD		
CD		
01	08/23/07	ADDENDUM 1
02	09/11/07	ADDENDUM 2
03	11/01/07	ADDENDUM 3

JOB NUMBER: 2002480
CAD DRAWING FILE: 12:40 PM
DRAWN BY: TT
CHECKED BY: MKB

CHECK AND VERIFY ALL DIMENSIONS BEFORE PROCEEDING WITH THE WORK. REPORT DISCREPANCIES TO THE ARCHITECT.

THE DRAWINGS, IDEAS, AND DESIGNS REPRESENTED ON THIS SHEET ARE THE PROPERTY OF THE ARCHITECT.

COPYRIGHT
ORDIZ-MELBY ARCHITECTS, INC. 2002

SHEET TITLE

INTERIOR ELEVATIONS BUILDINGS D & E

SHEET IDENTIFICATION NUMBER

A-236

SHEET 25 OF 46

PLOT TIME: 12:40 PM
PLOT DATE: 11-2-2007
PLOT NAME: 12:40 PM
PLOT SCALE: 1/4" = 1'-0"