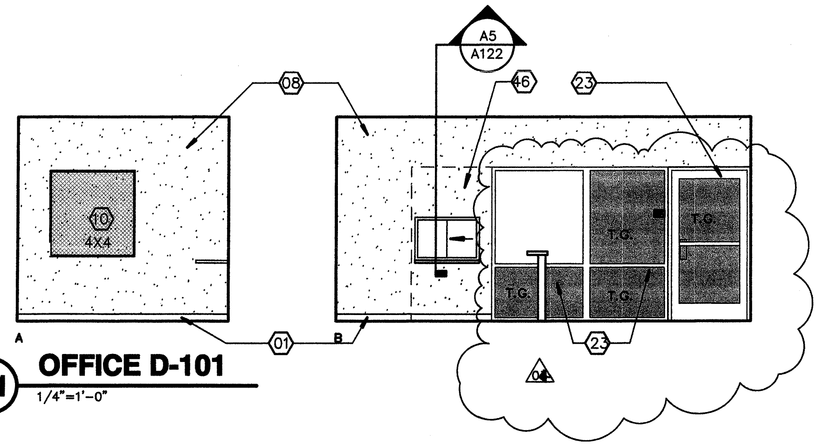

E1 OFFICE D-101
1/4"=1'-0"

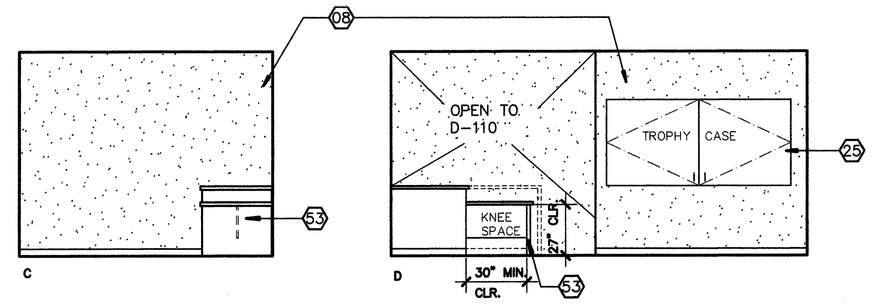

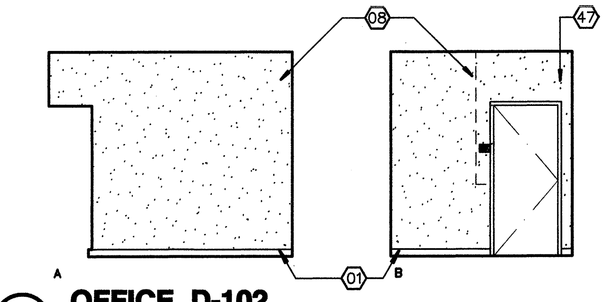

E4 OFFICE D-102
1/4"=1'-0"

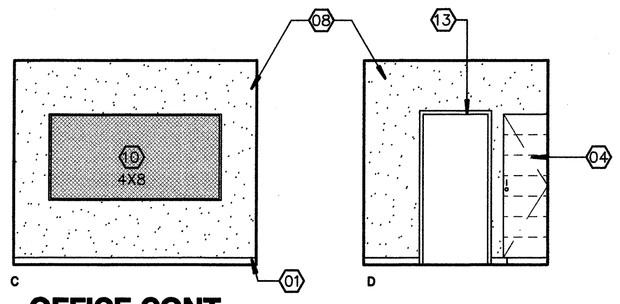

D1 OFFICE CONT.
1/4"=1'-0"

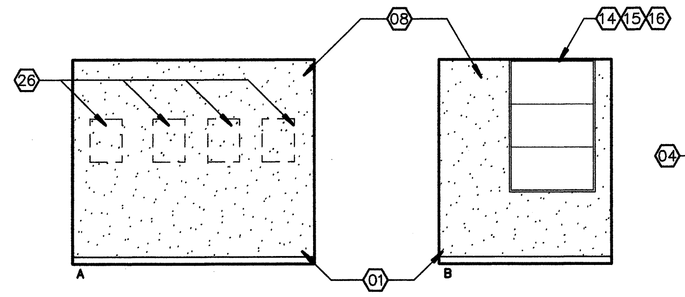

D2 OFFICE D-103
1/4"=1'-0"

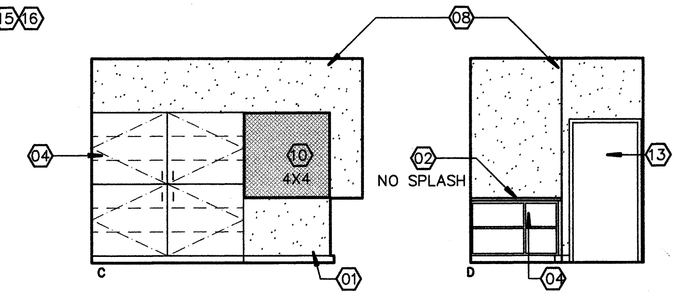

Item No. 12: Refer to Sheet A-234 A00 #4
Interior Elevation "E1" Elevation "B" Existing store front glazing to be replaced see Door Schedule A-611 for further requirements. Interior Elevation "C4" Elevation "A" Keynote #13 at wall is incorrect, revise to read "08." Elevation "B" Keynote #8 at door is incorrect, revise to read "08." "13" and Keynote #13 at wall is incorrect, revise to read "08." Add Keynote #12 to Elevation "B" at door. Interior Elevation "A2" Elevation "C" Keynote #35 is to point to sink and Elevation "D" is to point to 36" grab bar. Elevation "A5" Elevation "D" add Keynote #62 at Mirror. Revise Keynote #02 to read. "Remove and replace existing counter top with corian countertop with 6" splash (unless noted otherwise) calk to wall typical." Revise Keynote 03 to read. "Replace existing sink cabinet with ADA compliant sink cabinet, typical all sink cabinets." Revise Keynote #4 to read. "Existing cabinet to remain, remove and replace all doors, drawer fronts, & face plates. Finish per specifications." Revise Keynote #18 to read. "Remove existing trough sink, provide install corian counter with 6" splash & accessible sink per plumbing plans. See addendum drawing ADD-007 for further requirements." Delete Keynote #19. Revise Keynote #23 to read. "New store front glazing system-see Door Schedule." Delete keynote #24 & #42. Revise Keynote #53 to read. "Provide and install cabinet per specifications – with modesty panel per specifications."

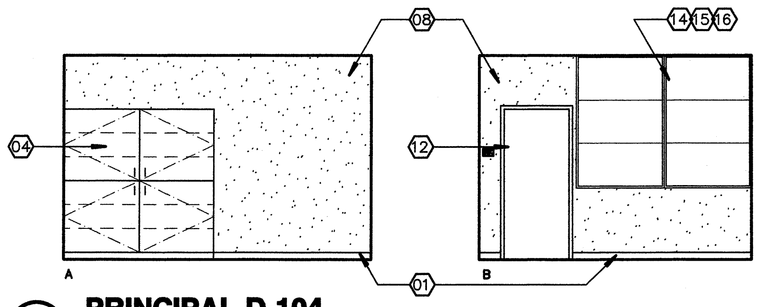

C1 PRINCIPAL D-104
1/4"=1'-0"

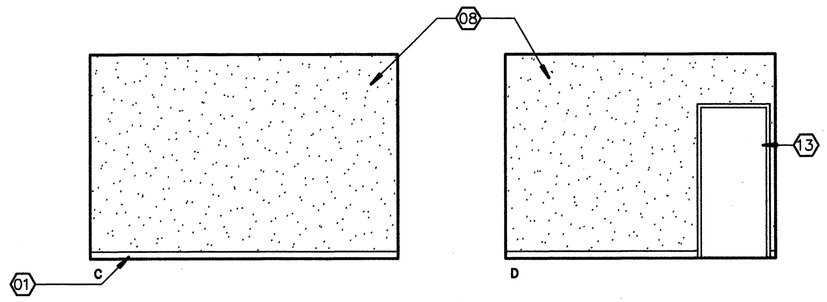

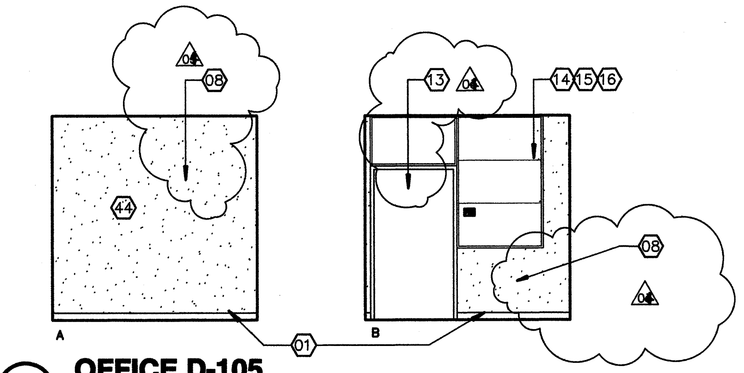

C4 OFFICE D-105
1/4"=1'-0"

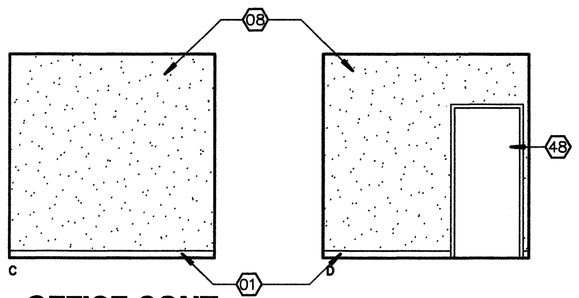

B1 OFFICE CONT.
1/4"=1'-0"

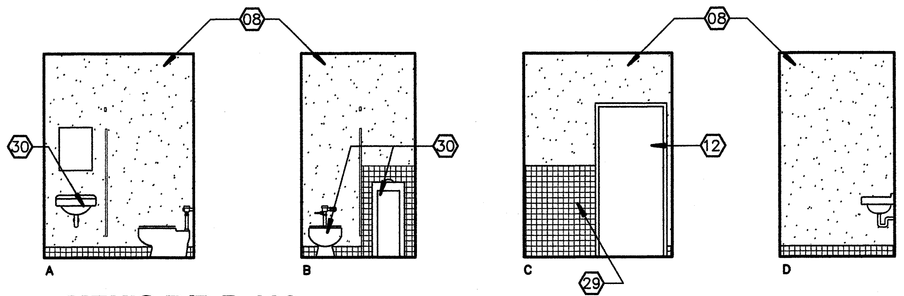

B3 MEN'S R/R D-106
1/4"=1'-0"

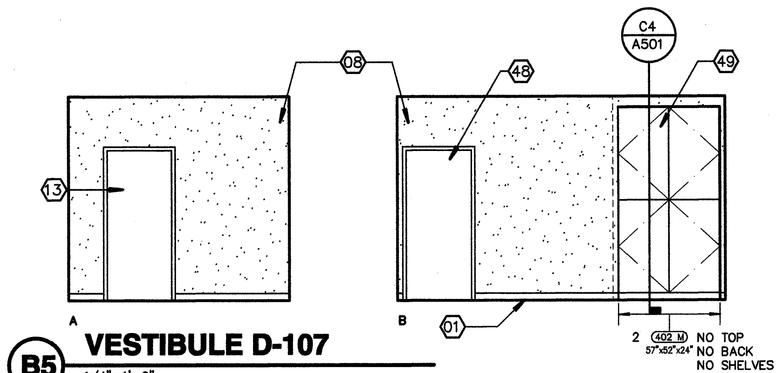

B5 VESTIBULE D-107
1/4"=1'-0"

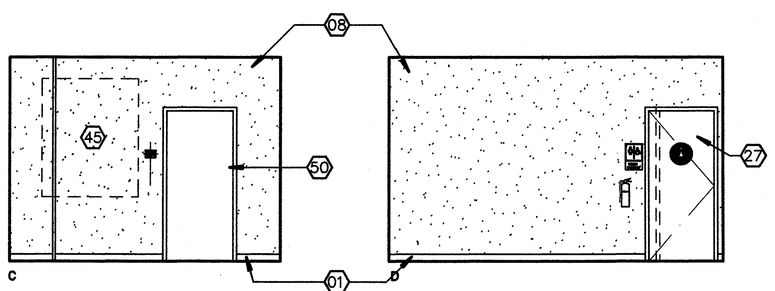

A1 VESTIBULE CONT.
1/4"=1'-0"

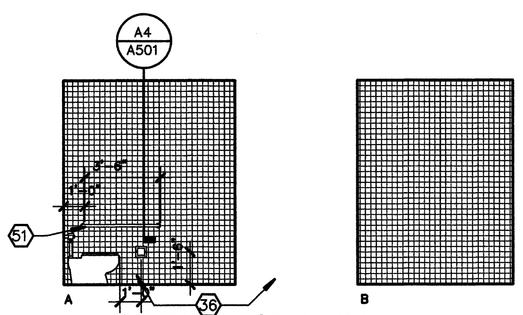

A2 WOMEN'S R/R D-108
1/4"=1'-0"
REFER TO DETAIL B5/A501 FOR REQUIRED MOUNTING HEIGHTS & CLEARANCES.

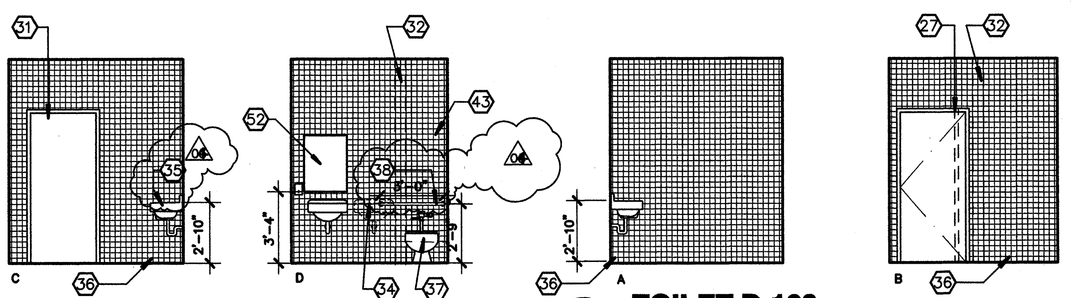

A5 TOILET D-109
1/4"=1'-0"
REFER TO DETAIL B5/A501 FOR REQUIRED MOUNTING HEIGHTS & CLEARANCES.

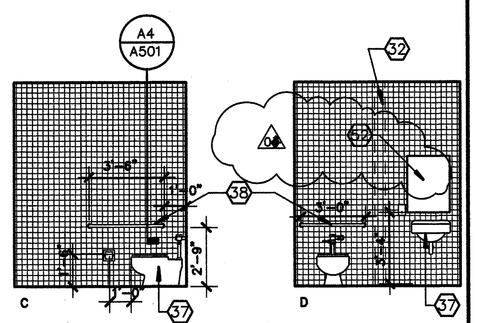

00 KEYNOTES
THIS SHEET ONLY

01 REMOVE (E) RUBBER BASE WHERE OCCURS–PROVIDE/INSTALL RTSB.

02 REMOVE/REPLACE (E) COUNTERTOP W/CORIAN COUNTERTOP W/6" SPLASH, (UNO) CAULK AT WALL.

03 REPLACE EXISTING SINK CABINET WITH ADA COMPLIANT SINK CABINET TYPICAL ALL SINK CABINETS 04

04 (E) CABINET TO REMAIN, REMOVE DOOR AND DRAWER PULLS, SAND ALL SURFACES, (DOORS, DRAWERS, SHELVES, ETC) TO REMOVE BUILT–UP PAINT, FILL DAMAGED AREAS, PREP & PAINT– REINSTALL HARDWARE.

05 MAINTAIN (E) OPEN SPACE FOR METAL FILE CABINET.

06 PROVIDE/INSTALL PAPER TOWEL DISPENSER–SEE SPECIFICATIONS.

07 PATCH/FILL DAMAGED WALLS AS REQUIRED, PREP– PAINT (E) PLYWOOD WALLS.

08 PATCH/FILL DAMAGED WALLS AS REQUIRED, PREP– PAINT (E) PLASTER FINISH WALLS.

09 REMOVE/REPLACE CHALK BOARDS W/LIQUID MARKER BOARDS SEE SPECIFICATIONS.

10 REMOVE/REPLACE (E) TACKBOARDS–SEE SPECIFICATIONS SEE DETAIL A6/A–231 FOR MOUNTING REQUIREMENTS

11 REMOVE ABANDON HEATER UNIT, CAP ALL SUPPLY/RETURN LINES BEHIND WALL, REMOVE VENT OPENING @ EXTERIOR WALL. INFILL MATCH 2X FRAMING, INSTALL INSULATION, PATCH–MATCH FINISHES–PAINT.

12 (E) DOOR/FRAME TO REMAIN, REPLACE HARDWARE W/ ACCESSIBLE HARDWARE. SEE DOOR SCHEDULE. SAND PREPARE DOOR SURFACE, PAINT EXTERIORS, RE–STAIN PREVIOUSLY STAINED AREAS WHERE OCCURS

13 (E) DOOR/FRAME TO REMAIN. SEE DOOR SCHEDULE. SAND PREPARE DOOR SURFACE, PAINT EXTERIORS, RE–STAIN PREVIOUSLY STAINED AREAS WHERE OCCURS.

14 @ WINDOWS CLEAN/PRIME TUBE STEEL MULLIONS–PAINT

15 @ WINDOWS CLEAN/PRIME PAINTED METAL WINDOW FRAME–PAINT

16 @ WINDOWS CLEAN/PRIME WOOD TRIM (JAMB/SILL/HEAD WH/OCCURS)–PAINT.

17 (E) WALL MOUNTED TV/BRACKET TO REMAIN.

18 REMOVE (E) TROUGH SINK, PROVIDE/INSTALL CORIAN COUNTER W/6" SPLASH & H.C. ACCESSIBLE SINK–CONNECT TO (E) SUPPLY/WASTE LINES–SEE PLUMBING DWGS. BREAK OUT TILE AS REQUIRED FOR INSTALLATION OF BLOCKING FOR COUNTERTOP–PATCH TILE–MATCH FINISHES.

~~19 REMOVE (E) WOOD SHELF/COAT ROD/HOOKS, PROVIDE/INSTALL PLASTIC LAMINATE SHELF @ SAME LOCATION–MATCH HEIGHT & DEPTH OF REMOVED SHELF.~~ 04

20 REMOVE (E) WOOD SHELF/COAT ROD/HOOKS, PATCH WALL AS REQUIRED, PAINT PLYWOOD WALL.

21 PREP(E) WOOD COUNTERTOP & ANGLED SHELVES–PAINT.

22 MODIFY (N) COUNTERTOP @ H.C. SINK CABINET TO PROVIDE 27" CLEAR KNEE SPACE.

23 NEW STOREFRONT GLAZING SYSTEM–SEE WINDOW SCHEDULE 04

~~24 STOREFRONT WINDOWS TO REMAIN.~~

25 (E) DISPLAY CASE TO REMAIN–REPLACE CORK LINING, PRIME/PAINT WOOD SURFACE.

26 REMOVE (E) ELECTRICAL PANELS NOT IN USE PATCH MATCH FINISHES

27 REMOVE DOOR/FRAME, ENLARGE OPENING FOR S.C. WOOD DOOR/H.M. FRAME W/ACCESSIBLE HARDWARE. PATCH OPENING–MATCH FINISHES–SEE FINISH & DOOR SCHEDULE, SEE STRUCTURAL DWGS FOR HEADER.

28 NOT USED.

29 (E) CERAMIC TILE TO REMAIN.

30 (E) PLUMBING FIXTURES TO REMAIN.

31 REMOVE DOOR/FRAME, PROVIDE/INSTALL H.M. DOOR/FRAME/ACCESSIBLE HARDWARE. REVERSE DOOR SWING–PATCH WALL MATCH FINISHES–SEE FINISH & DOOR SCHEDULE.

32 REMOVE WALL–PATCH ADJACENT SURFACES AS REQUIRED, SEE FINISH SCHEDULE.

33 REMOVE PLUMBING FIXTURE @ WALL TO BE DEMOLISHED, CAP SUPPLY LINES ABOVE CEILING & WASTE LINES BELOW FLOOR, PATCH AS REQUIRED MATCH (E) FINISHES–SEE FINISH SCHEDULE.

34 REMOVE PLUMBING FIXTURE TO PROVIDE ACCESSIBLE SPACE. CAP SUPPLY & WASTE LINES IN WALL & BELOW FLOOR–PATCH SURFACES AS REQUIRED MATCH (E) FINISHES SEE FINISH SCHEDULE.

35 REMOVE (E) PLUMBING FIXTURE, PROVIDE/INSTALL. ACCESSIBLE FIXTURE SEE PLUMBING DWGS. PATCH AS REQUIRED MATCH FINISES. SEE FINISH SCHEDULE.

36 REMOVE/REPLACE TILE FLOOR PROVIDE INSTALL CERAMIC WALL TILE

37 PROVIDE/INSTALL ACCESSIBLE PLUMBING FIXTURE–PATCH WALL/FLOOR AS REQUIRED–MATCH FINISHES–SEE PLUMBING DWGS.

38 PROVIDE/INSTALL H.C. GRAB BARS–INSTALL BLOCKING AS REQUIRED.

39 (E) PLUMBING FIXTURES TO REMAIN

40 2x6 @ 16" O.C. W/ PLASTER FINISH–PROVIDE SOUND BATTS.

41 (E) WALL MOUNTED TV/BRACKET TO REMAIN.

~~42 REMOVE (E) WOOD SHELF/COAT ROD/HOOKS, PROVIDE/INSTALL PLASTIC LAMINATE SHELF @ SAME LOCATION–MATCH HEIGHT & DEPTH OF REMOVED SHELF.~~

43 REMOVE TOILET PARTITIONS–PATCH WALL AS REQUIRED, MATCH FINISHES–PAINT.

44 REMOVE EXISTING TACKBOARD, PATCH WALL AS REQD, & PAINT.

45 REMOVE WINDOW, FILL/PATCH WALL AS REQD, MATCH FINISHES & PAINT.

46 INFILL (E) OPENING W/2x @ 16" O.C., INSULATION. PATCH WALL MATCH FINISHES. PROVIDE/INSTALL ALUM. SLIDER TICKET WINDOW W/PLASTIC LAMINATE COUNTER–SEE WINDOW SCHED. PATCH ADJACENT FINISHES AS REQUIRED–PAINT.

47 REMOVE WINDOW, REMOVE WALL BENEATH AS REQUIRED FOR INSTALLATION OF H.M. DOOR/FRAME W/ACCESSIBLE HARDWARE, SEE DOOR SCHEDULE INFILL & PATCH WALL, MATCH (E) FINISHES.

48 H.M. DOOR/FRAME W/ACCESSIBLE HARDWARE–SEE DOOR SCHEDULE

49 PROVIDE CRIPPLE WALL ABOVE (N) CABINET DOOR ENCLOSURE FOR TELEPHONE BACKBOARD–SEE ELECTRICAL. OMIT BACK, SHELVES & TOP @ CABINET. WALL FINISH TO MATCH ADJACENT PLASTER FINISH–PAINT

50 PROVIDE / INSTALL H.M. DOOR / FRAME / ACCESSIBLE HARDWARE PATCH WALL MATCH FINISHES SEE DOOR AND FINISH SCHEDULE

51 PROVIDE/INSTALL GRAB BARS–INSTALL BLOCKING AS REQUIRED.

52 PROVIDE/INSTALL MIRROR PAPER TOWEL DISPENSER T.P. DISPENSER SEE SPECIFICATIONS 04

53 PROVIDE/INSTALL CABINET PER SPECIFICATIONS –W/MODESTY PANEL

ORDIZ MELBY
ARCHITECTS, INC.
5500 MING AVENUE SUITE 280
BAKERSFIELD, CALIFORNIA 93309
TELEPHONE (661) 832-5258
FACSIMILE (661) 832-4291

LICENSED ARCHITECT WILLIAM JOHN MELBY No. C-16835 DEC. 31 2003 RENEWAL DATE STATE OF CALIFORNIA

DANNY E. ORDIZ, AIA
ARCHITECT C-14,728
WILLIAM J. MELBY, AIA
ARCHITECT C-16,835
CONSULTANT

IDENTIFICATION STAMP
DIVISION OF STATE ARCHITECT
OFFICE OF REGULATION SERVICES

APPL. 03-107003
FILE # 15-6

AC ____ FLS ____ SS ____
DATE ____

MODERNIZATION AT CURRAN MIDDLE SCHOOL FOR:

BAKERSFIELD CITY SCHOOL DISTRICT

1116 LYMRIC WAY BAKERSFIELD CALIFORNIA 93309

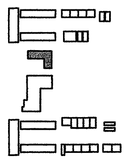

BUILDING KEY PLAN

MARK	DATE	DESCRIPTION
SD		
CD		
8		
8		
8		
8		

JOB NUMBER:
2002480
CAD DRAWING FILE:
12:39 PM
DRAWN BY:
CHECKED BY:
MKB
CHECK AND VERIFY ALL DIMENSIONS BEFORE PROCEEDING WITH THE WORK. REPORT DISCREPANCIES TO THE ARCHITECT.

THE DRAWINGS, IDEAS, AND DESIGNS REPRESENTED ON THIS SHEET ARE THE PROPERTY OF THE ARCHITECT.
COPYRIGHT
ORDIZ-MELBY ARCHITECTS, INC. 2002

SHEET TITLE
INTERIOR ELEVATIONS BUILDING D

SHEET IDENTIFICATION NUMBER
A-234
SHEET 23 OF 46

PLOT TIME: 12:39 PM
PLOT DATE: 12-20-2007
PLOT NAME: 12:39 PM
PLOT SCALE: 1/4" = 1'-0"