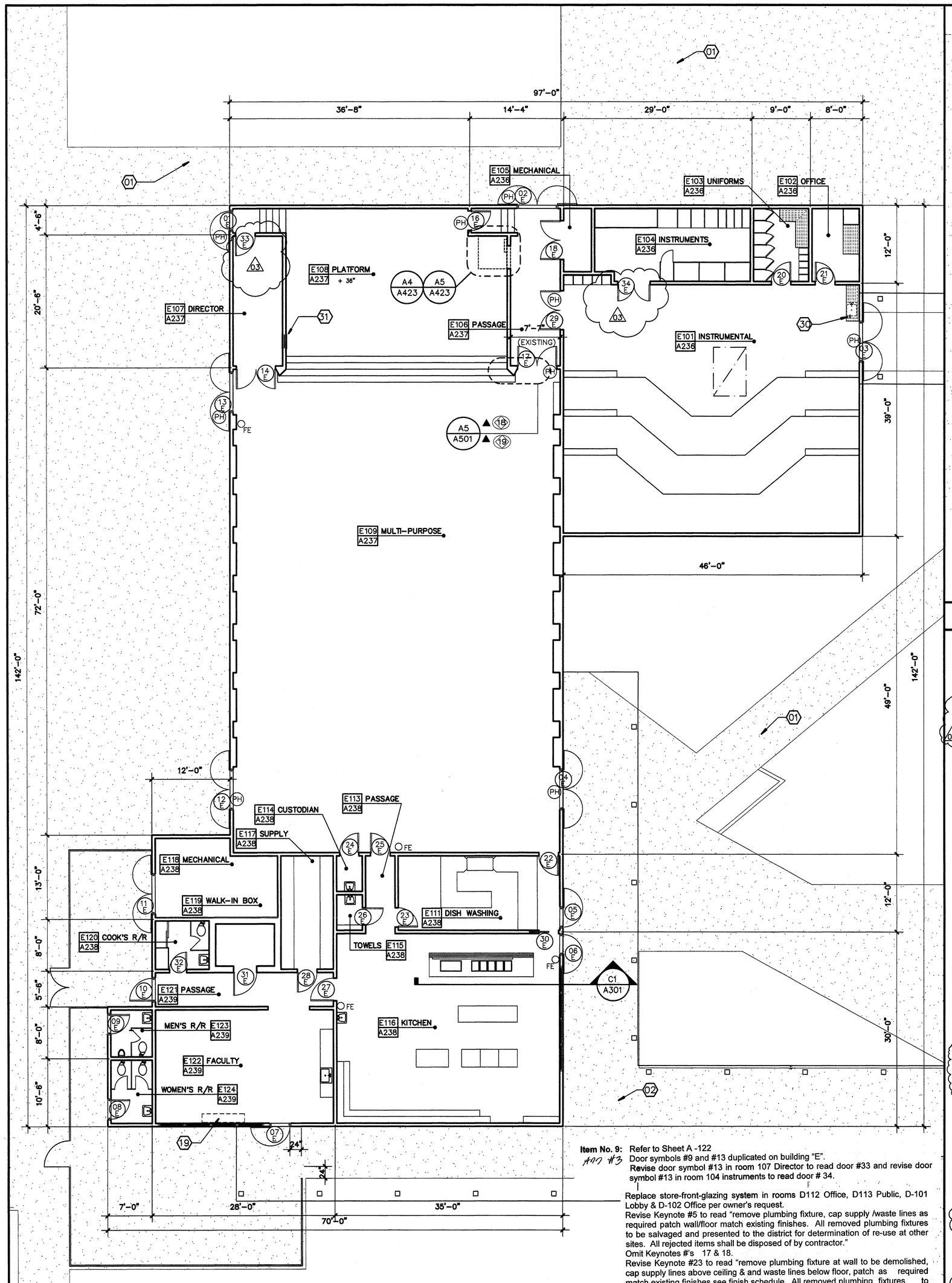

Item No. 9: Refer to Sheet A-122
Add #3
Door symbols #9 and #13 duplicated on building "E".
Revise door symbol #13 in room 107 Director to read door #33 and revise door symbol #13 in room 104 instruments to read door # 34.

Replace store-front-glazing system in rooms D112 Office, D113 Public, D-101 Lobby & D-102 Office per owner's request.
Revise Keynote #5 to read "remove plumbing fixture, cap supply /waste lines as required patch wall/floor match existing finishes. All removed plumbing fixtures to be salvaged and presented to the district for determination of re-use at other sites. All rejected items shall be disposed of by contractor."
Omit Keynotes #'s 17 & 18.
Revise Keynote #23 to read "remove plumbing fixture at wall to be demolished, cap supply lines above ceiling & and waste lines below floor, patch as required match existing finishes see finish schedule. All removed plumbing fixtures to be salvaged and presented to the district for determination of re-use at other sites. All rejected items shall be disposed of by contractor."
Revise Keynote #24 to read "Remove plumbing fixture to provide accessible space. Cap supply and waste lines in wall and below floor patch surfaces as required match (E) finishes see finish schedule. All removed plumbing fixtures to be salvaged and presented to the district for determination of re-use at other sites. All rejected items shall be disposed of by contractor."
Revise Keynote # 25 to read "remove existing plumbing fixture, provide/install accessible fixture see plumbing drawings. Patch as required match existing finishes see finish schedule. All removed plumbing fixtures to be salvaged and presented to the District for determination of re-use at other sites. All rejected items shall be disposed of by contractor."
Revise Keynote #30 to read "remove sink cabinet to provide accessible sink cabinet. Remove and replace existing counter top, remove and replace sink see plumbing plans."
Revise Keynote #36 to read "demo existing store-front glazing system."

Item No. 3: Refer to Sheet A-122
Add #7
Floor/Demo Plan Building "E" Office E-102; see Addendum Drawings ADD-020, ADD-021, & ADD-022 for additional conduit chase requirements. Demo Plan Building "E", see addendum drawing ADD-019 for additional conduit chase requirements; all concrete patching per Addendum Drawing ADD-010.

A1 FLOOR/DEMO PLAN BUILDING 'E'

1/8"=1'-0" 0' 4' 8' 16'

*ENLARGED FLOOR PLAN A-423, & A-424

NORTH

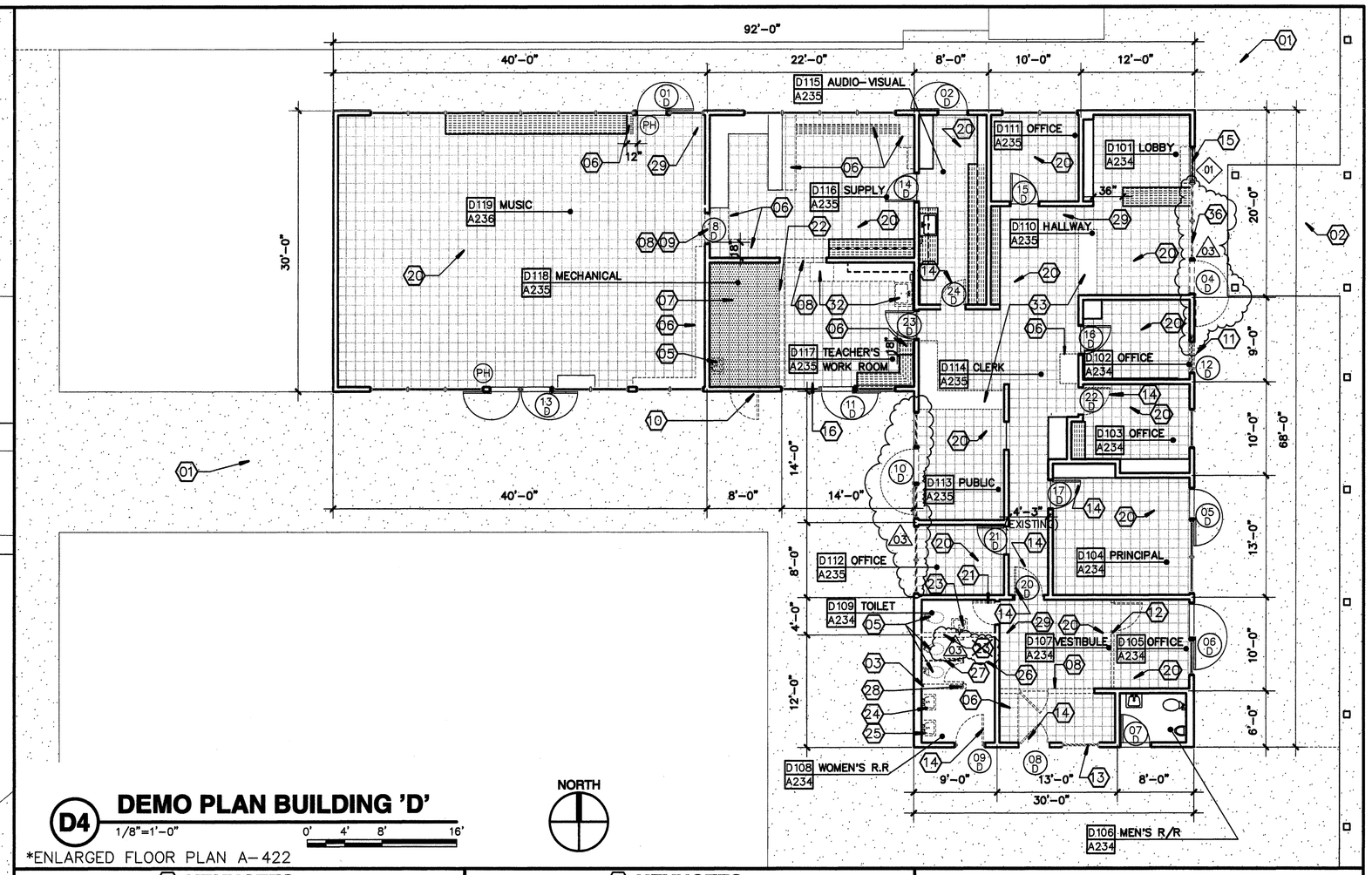

D4 DEMO PLAN BUILDING 'D'

1/8"=1'-0" 0' 4' 8' 16'

*ENLARGED FLOOR PLAN A-422

NORTH

00 KEYNOTES
THIS SHEET ONLY

01 (E) CONCRETE WALK TO REMAIN.

02 (E) COVERED WALK TO REMAIN.

03 REMOVE WALL-PATCH ADJACENT SURFACES AS REQUIRED, SEE ENLARGED FLOOR PLAN, FINISH SCHEDULE.

04 NOT USED

05 REMOVE PLUMBING FIXTURE, CAP SUPPLY/WASTE LINES AS REQUIRED PATCH WALL/FLOOR MATCH (E) FINISHES. REMOVED PLUMBING FIXTURES TO BE SALVAGED AND PRESENTED TO DISTRICT FPR DETERMINATION OF RE-USE AT OTHER SITES. ALL REJECTED ITEMS SHALL BE DISPOSED OF BY CONTRACTOR. 03.

06 REMOVE CABINETS OR PORTION OF CABINETS AS SHOWN PATCH WALL/FLOOR AS REQUIRED, MATCH (E) FINISHES. PROVIDE WOOD END PANELS TO REMAINING CABINETS AS REQUIRED-PAINT.

07 PATCH CONCRETE SLAB AS REQUIRED FOR INSTALLATION OF NEW FLOORING, SEE FINISH SCHEDULE.

08 REMOVE PORTION OF WALL TO PROVIDE OPENING, PATCH WALL/FLOOR AS REQUIRED, SEE FINISH SCHEDULE. SEE STRUCTURAL DWGS DETAIL 10 SHEET S-101 FOR HEADER REQUIREMENTS WHERE OCCURS.

09 CUT OPENING FOR DOOR, PROVIDE/INSTALL S.C. DOOR / H.M. FRAME W/ ACCESSIBLE HARDWARE, SEE DOOR SCHEDULE.

10 REMOVE DOOR/FRAME, INFILL OPENING WITH STUD PER DETAIL 8 SHEET S-101 W/ INSULATION MATCH (E) FINISHES.

11 REMOVE WINDOW, REMOVE WALL BENEATH AS REQUIRED FOR INSTALLATION OF H.M. DOOR/FRAME W/ACCESSIBLE HARDWARE, SEE DOOR SCHEDULE INFILL & PATCH WALL, MATCH (E) FINISHES.

12 REMOVE PARTIAL WALL/DOOR-PATCH WALL/FLOOR AS REQUIRED MATCH (E) FINISHES

13 REMOVE PASS-THRU WINDOW/FRAME-INFILL W/STUDS & INSULATION PATCH WALL MATCH (E) FINISHES. SEE DETAIL S-101

14 REMOVE DOOR/FRAME, PROVIDE/INSTALL S.C. DOOR/H.M. FRAME/ ACCESSIBLE HARDWARE @ (E) OPENING. REVERSE DOOR SWING-PATCH WALL-MATCH FINISHES-SEE FINISH & DOOR SCHEDULE.

15 AT (E) PATCHED OPENING-REMOVE (E) PLYWOOD PANEL, WOOD TRIM, TICKET WINDOW W/COUNTER & PORTION OF STOREFRONT MTL FRAME. SEE ENLARGED PLAN A-422 FOR (N) WORK.

16 REMOVE / REPLACE DRINKING FOUNTAIN PROVIDE ACCESSIBLE D.F. SEE PLUMBING PLANS

17 ~~AT (E) WALL CUT & FRAME OPENING FOR RETURN AIR GRILL, PATCH WALL-MATCH FINISH-PAINT, SEE MECHANICAL DWGS. LOCATE +11-8" MIN FROM WEST WALL TO AVOID (E) SHEAR PANEL-SEE INTERIOR ELEVATIONS SHEET~~ 03. OMIT DETAIL A1 FOR LOCATION OF NEW OPENING

18 ~~REMOVE (E) SHELVING FOR RETURN AIR DUCTING-CUT OPENING/ PATCH AND MATCH WALL FINISH AS REQUIRED-SEE MECHANICAL PLANS.~~

19 EXISTING HEATER TO BE REMOVED / PATCH AND MATCH WALL AS REQUIRED

20 REMOVE (E) RUBBER BASE (WHERE OCCURS).

21 REMOVE DOOR/FRAME, REMOVE PORTION OF WALL TO ENLARGE OPENING, PROVIDE/INSTALL S.C. DOOR/H.M. FRAME/ACCESSIBLE HARDWARE-SEE FINISH & DOOR SCHEDULE. SEE STRUCT FOR HEADER SIZE.

22 REMOVE WALL-PATCH ADJACENT SURFACES AS REQUIRED, SEE FINISH SCHEDULE.

23 REMOVE PLUMBING FIXTURE @ WALL TO BE DEMOLISHED, CAP SUPPLY LINES ABOVE CEILING & WASTE LINES BELOW FLOOR, PATCH AS REQUIRED MATCH (E) FINISHES-SEE FINISH SCHEDULE. ALL REMOVED FIXTURES TO BE SALVAGED AND PRESENTED TO DISTRICT FOR DETERMINATION OF RE-USE AT OTHER SITES. ALL REJECTED ITEMS SHALL BE DISPOSED OF BY CONTRACTOR. 03.

24 REMOVE PLUMBING FIXTURE TO PROVIDE ACCESSIBLE SPACE. CAP SUPPLY & WASTE LINES IN WALL & BELOW FLOOR-PATCH SURFACES AS REQUIRED MATCH (E) FINISHES SEE FINISH SCHEDULE. ALL REMOVED PLUMBING FIXTURES TO BE SALVAGED AND PRESENTED TO DISTRICT FOR DETERMINATION OF RE-USE AT OTHER SITES. ALL REJECTED ITEMS SHALL BE DISPOSED OF BY CONTRACTOR.

25 REMOVE (E) PLUMBING FIXTURE, PROVIDE/INSTALL ACCESSIBLE FIXTURE SEE PLUMBING DWGS. PATCH AS REQUIRED MATCH FINISES. SEE FINISH SCHEDULE. ALL REMOVED PLUMBING FIXTURES TO BE SALVAGED AND PRESENTED TO DISTRICT FOR DETERMINATION OF RE-USE AT OTHER SITES. ALL REJECTED ITEMS SHALL BE DISPOSED OF BY CONTRACTOR

26 REMOVE/REPLACE TILE FLOOR & BASE, PATCH WALLS AS REQUIRED -PAINT.

27 REMOVE TOILET PARTITIONS-PATCH WALL AS REQUIRED, MATCH FINISHES-PAINT.

28 REMOVE (E) 2" STD. NON STRUCTURAL PIPE COLUMN

29 PROVIDE/INSTALL FIRE EXTINGUISHER-MOUNT 48" ABOVE F.F. TO HANDLE

00 KEYNOTES
CONTINUED

30 REMOVE SINK CABINET TO PROVIDE ACCESSIBLE SINK CABINET, REMOVE/REPLACE (E) COUNTERTOP, REMOVE/REPLACE SINK-SEE PLUMBING DWGS. 03.

31 PROVIDE/INSTALL LISTENING ASSISTANCE DEVICE - SEE ELECTRICAL PLANS AND SPECIFICATIONS.

32 REMOVE CABINET/SINK-INSTALL PLASTIC LAM. CAB W/H.C. ACCESSIBLE SINK-SEE ENLARGED PLAN, INTERIOR ELEV. & PLUMBING DWGS.

33 REMOVE CABINETS TO PROVIDE H.C. ACCESSIBLE CABINET-SEE ENLARGE PLAN A-422 & INTERIOR ELEVATIONS.

34 AT (E) WALL CUT & FRAME OPENING FOR RETURN AIR GRILL, PATCH WALL-MATCH FINISH-PAINT, SEE MECHANICAL DWGS.

35 (E) DUCT OPENING IN WALL-SEE MECHANICAL DWGS.

36 DEMO EXISTING STORE-FRONT GLAZING SYSTEM. 03.

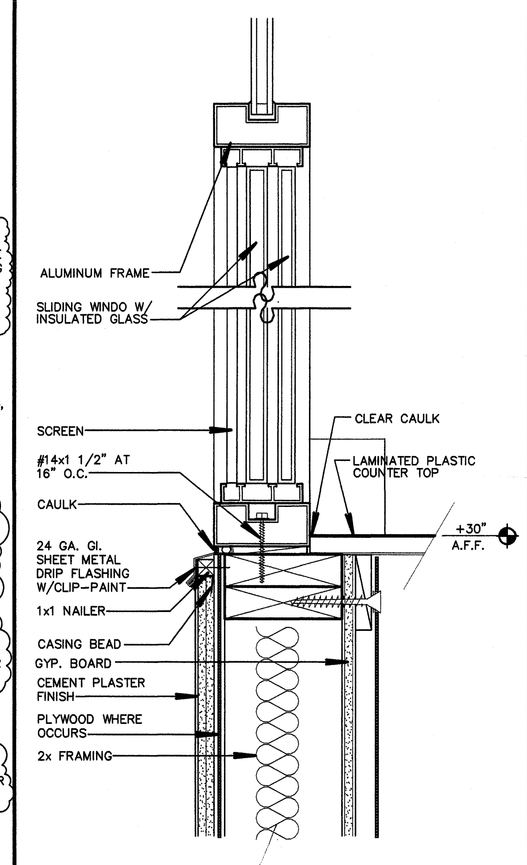

A5 TRANSACTION WINDOW

3"=1'-0"

LEGEND

EXISTING 2x6 STUD WALL

(E) PLASTIC LAMINATE COUNTERTOP TO BE REMOVED

(E) CONCRETE WALK

FE FIRE EXTINGUISHER @ 48" TO CENTER OF HANDLE

1 DOOR SIGNAGE SEE DETAIL A5/A501

D 03 B E INTERIOR ELEVATION VIEW

A1 A221 EXTERIOR ELEVATION SYMBOL SHEET NUMBER

A101 A231 ROOM NUMBER / INTERIOR ELEVATION SHEET NUMBER

01 A DOOR SYMBOL / DOOR NUMBER

A1 A601 DETAIL NUMBER / SHEET NUMBER

4 WINDOW SYMBOL / WINDOW NUMBER

A1 A301 SECTION NUMBER / SHEET NUMBER

PH PANIC DOOR HARDWARE

ACCESSIBLE CLEARANCE LEGEND

NOTE: ALL DIMENSIONS ARE CLEARANCE TO FINISH MATERIALS

5'-0" DIAMETER TURNING CIRCLE

30"x48" CLEAR AREA TYP. U.N.O.

DEMO LEGEND

PLUMBING FIXTURES TO BE REMOVED

DOOR TO BE REMOVED

2x WALL TO BE REMOVED

ORDIZ MELBY
ARCHITECTS, INC.
5500 MING AVENUE SUITE 280
BAKERSFIELD, CALIFORNIA 93309
TELEPHONE (661) 832-5258
FACSIMILE (661) 832-4291

LICENSED ARCHITECT WILLIAM JOHN MELBY No. C- 16835 DEC. 31 2007 RENEWAL DATE STATE OF CALIFORNIA

DANNY E. ORDIZ, AIA
ARCHITECT C-14,728

WILLIAM J. MELBY, AIA
ARCHITECT C-16,835

CONSULTANT

IDENTIFICATION STAMP
DIVISION OF STATE ARCHITECT
OFFICE OF REGULATION SERVICES

APPL. 03-107003
FILE # 15-6

AC ____ FLS ____ SS ____

DATE ____

MODERNIZATION AT CURRAN MIDDLE SCHOOL FOR:

BAKERSFIELD CITY SCHOOL DISTRICT

1116 LYMRIC WAY
BAKERSFIELD
CALIFORNIA
93309

BUILDING KEY PLAN

MARK	DATE	DESCRIPTION
SD		
CD		
01.	08/23/07	ADDENDUM 1
02.	09/11/07	ADDENDUM 2
03.	11/01/07	ADDENDUM 3

JOB NUMBER: 2002480
CAD DRAWING FILE: 9:08 AM
DRAWN BY: TT
CHECKED BY: MKB

CHECK AND VERIFY ALL DIMENSIONS BEFORE PROCEEDING WITH THE WORK. REPORT DISCREPANCIES TO THE ARCHITECT.

THE DRAWINGS, IDEAS, AND DESIGNS REPRESENTED ON THIS SHEET ARE THE PROPERTY OF THE ARCHITECT.

COPYRIGHT
ORDIZ-MELBY ARCHITECTS, INC. 2002

SHEET TITLE

FLOOR DEMO PLAN BUILDINGS D & E

SHEET IDENTIFICATION NUMBER

A-122

SHEET 04 OF 46

PLOT TIME: 8:50 AM
PLOT DATE: 9/5/2003
PATH NAME: G:\JOBS 451-499\2002480\DRAWINGS\DD\A122.DCS
PLOT SCALE: 1/8" = 1'-0"