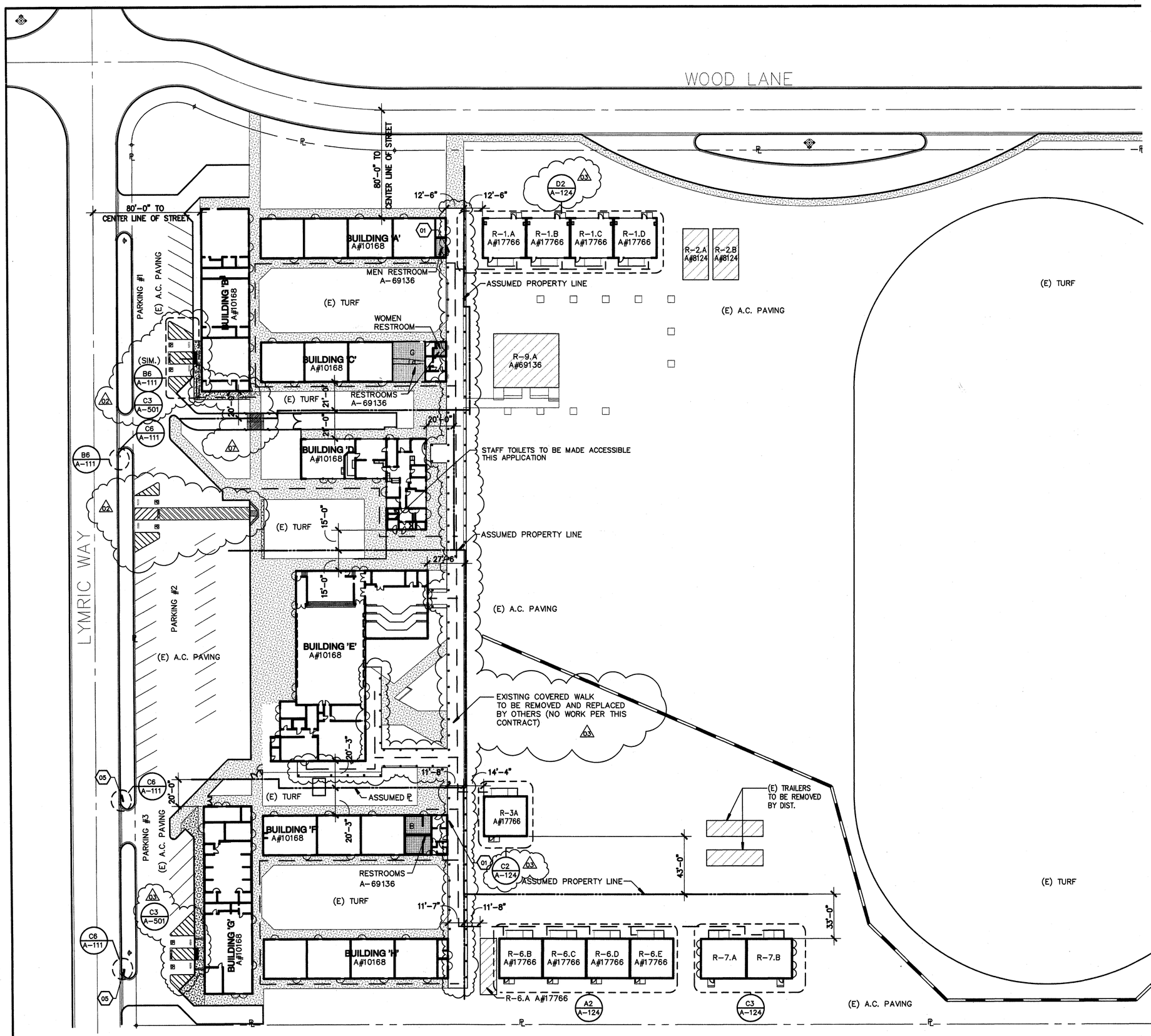

DISTRICT WILL ADD DIRECT SIGNAGE WHERE OCCURS.
FIELD VERIFY THAT ALL EXISTING GATES MEET THE FOLLOWING REQUIREMENTS. GATES IN THE PATH OF TRAVEL MUST COMPLY WITH EXIT DOOR REQUIREMENTS (SEE SECTION 1133B.2) SPECIFY LEVER HARDWARE AND KICK PLATE OR PROVIDE A SIGN OR ADJACENT TO GATE STATING THAT THIS GATE IS TO REMAIN LOCKED IN THE OPEN POSITION DURING BUSINESS SCHOOL HOURS OR DURING ANY PUBLIC FUNCTIONS. FIRE AND LIFE SAFETY MAY REQUIRE PANIC HARDWARE FOR EMERGENCY EXISTING EVEN WITH THE SIGN. ORDINATE WITH FIRE AND LIFE SAFETY REQUIREMENTS

PATH OF TRAVEL (POT) AS INDICATED IS A BARRIER FREE ACCESS AT LEAST 48" WIDE WITHOUT ANY ABRUPT VERTICAL CHANGES EXCEEDING 1/2" AT 1:12 MAXIMUM CROSS SLOPE 2% TYPICAL AND SLOPE IN THE DIRECTION OF THE PATH OF TRAVEL DOSE NOT EXCEED 5% UNLESS OTHERWISE NOTED. THE CONTRACTOR SHALL VERIFY THAT ALL BARRIERS ON THE INDICATED PATH OF TRAVEL HAVE BEEN REMOVED

COMPLETE FIRE ALARM PLAN SUBMITTAL:
THE FIRE ALARM SYSTEM SHOWN ON THESE PLANS HAS BEEN SUBMITTED AND APPROVED BY THE DIVISION OF STATE ARCHITECT. ANY SUBSTITUTION OF THE FIRE ALARM SYSTEM SHALL BE RESUBMITTED TO THE DIVISION OF STATE ARCHITECT FOR REVIEW AND APPROVAL FEES. CONTRACTOR SHALL BE RESPONSIBLE FOR ANY FEES THAT ARE AND APPROVAL FEES. CONTRACTOR SHALL BE RESPONSIBLE FOR ANY FEES THAT ARE INCURRED DUE TO THIS SUBSTITUTION.

B1 SITE PLAN
1"= 40'-0" 0' 20' 40' 80'

NORTH

REQUIRED ACCESSIBLE PARKING STALLS

TOTAL PARKING IN LOT	REQUIRED MINIMUM OF ACCESSIBLE SPACES
1 TO 25	1
26 TO 50	2
51 TO 75	3

PARKING #1	10 STALLS	1–REQUIRED – 2–PROVIDED
PARKING #2	29 STALLS	2–REQUIRED – 2–PROVIDED
PARKING #3	8 STALLS	1–REQUIRED – 2–PROVIDED

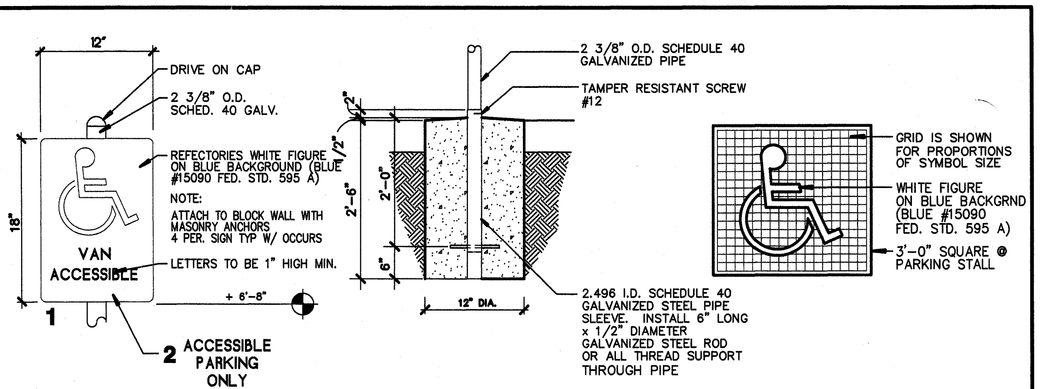

A2 SIGNAGE

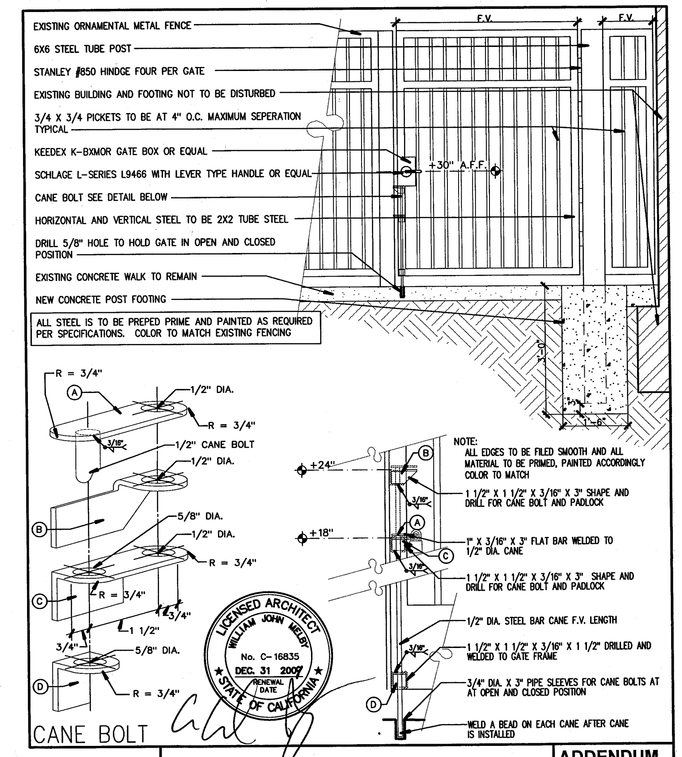

ORDIZ MELBY ARCHITECTS INC.

MAINTENANCE GATE (OMI1)

PROJECT FOR:
BAKERSFIELD CITY SCHOOL DISTRICT
1300 BAKER ST BAKERSFIELD CA 93301

ADDENDUM DRAWING ADD-013.1
JOB NUMBER 2002480
DATE 1-8-2008

Item No. 1: Refer to Sheet A-111 – Detail D6 Accessible Drinking Fountain to be replaced with Hi-Lo Drinking fountain per Addendum Drawing ADD-001
ADD #1

Item No. 1: Refer to Sheet A-111 – Parking lot #1 accessible parking stalls to be revised per addendum drawing ADD-002
ADD # 2
Item No. 2: Refer to Sheet A-111 – Parking lot #2 accessible parking stalls and crosswalk to be revised per addendum drawing ADD-003
ADD # 2
Item No. 3: Refer to Sheet A-111 – Parking lot #3 accessible parking stalls to be revised per addendum drawing ADD-004
ADD # 2

Item No. 5: Refer to addendum drawing ADD-005 In-Line Truncated Domes to be added to current scope of work as required per addendum drawings ADD-002, ADD-003 & ADD-004.
ADD # 2

Item No. 7: Refer to Sheet A-111
ADD # 2 Enlarged plan indicator D1/A-124 incorrect. Revise to read D2/A-124, Key Note #1 Reference to detail D4 incorrect revise to read C4, Keynote #3reference to detail B6/A-111 incorrect revise to read C3/A-501.

Item No. 1: Refer to Sheet A-111
ADD #7 Replace Sheet A-111 with Sheet ADD-A-111. Accessible path of travel between parking lots #1 and #2 revised per Addendum Drawing ADD-013 and ADD-013.1

BASIC ALLOWABLE BUILDING AREA P/ CBC TABLE 5–B

OCCUPANCY GROUP A2.1 10,500 S.F.
OCCUPANCY GROUP E–1 = 9,100 S.F.
OCCUPANCY GROUP B = 8,000 S.F.

AREA INCREASES 1.5 MAX GOVERNS

9,100 X 1.5 = 13,650 S.F.

* SINGLE STORY

** 50% AREA INCREASE PER CBC. 305.2

BUILDING DATA

BUILDING	BUILDING OCCUPANCY	BUILDING AREA S.F.	CONSTRUCTION TYPE	BASIC ALLOWABLE AREA	AREA INCREASE	MAXIMUM AREA	BUILDING HEIGHT*	FIRE SPRINKLERS
BUILDING A	E–1	4080	V–N	9100			13'–0"	NO
BUILDING B	E–1	4896	V–N	9100			13'–0"	NO
BUILDING C	E–1	4080	V–N	9100			13'–0"	NO
TOTAL		13,056			50% **	13,650		
BUILDING D	B	3878	V–N	8000	NA	–	13'–0"	NO
BUILDING E	A2.1	10,257	V–N	10,500	NA	–	20'–0"	NO
BUILDING F	E–1	4080	V–N	9100		–	13'–0"	NO
BUILDING G	E–1	5040	V–N	9100		–	13'–0"	NO
BUILDING H	E–1	4080	V–N	9100		–	13'–0"	NO
TOTAL		13,200			50% **	13,650		
R1A	E–1	(32x40)4= 3840	V–N	9100	NA		12'–0"	NO
R2A & B	E–1	(19x38)2= 3840	V–N	9100	NA		12'–0"	NO
R9A	E–1	(48x40)4= 1920	V–N	9100	NA		12'–0"	NO
R9B & C	E–1	(38x19)2= 1444	V–N	9100	NA		12'–0"	NO
TOTAL		8,948						
R–3	E–1	(48x40)= 1920	V–N	9100	NA		12'–0"	NO
R3B–E	E–1	(24x40)4= 2880	V–N	9100	NA		12'–0"	NO
R4	E–1	504	V–N	9100	NA		12'–0"	NO
R5	E–1	504	V–N	9100	NA		12'–0"	NO
TOTAL		8,648						
R–6A	E–1	504	V–N	9100	NA		12'–0"	NO
R6B–E	E–1	(32x40)4= 3840	V–N	9100	NA		12'–0"	NO
R7A&B	E–1	(35x30)2= 2880	V–N	9100	NA		12'–0"	NO
TOTAL		6,444						

KEYNOTES
THIS SHEET ONLY

01 REMOVE / REPLACE DRINKING FOUNTAIN W / ACCESSIBLE DRINKING FOUNTAIN – SEE PLUMBING PLANS SEE DETAIL C6 THIS SHEET
02 (E) H.C. PARKING PER A#10168 PAINT STRIPING FOR H.C. SPACES, PATH OF TRAVEL, PROVIDE / INSTALL SIGNAGE BUMPER GUARDS ECT.
03 PROVIDE ACCESSIBLE CURB CUT PER DETAIL C3/A–501
04 (E) ACCESSIBLE PARKING SIGNAGE PER APPLICATION # 10168 TO REMAIN
05 PROVIDE / INSTALL TOW AWAY SIGNAGE SEE DETAIL C6/A111
06 REMOVE/REPLACE H.C. ACCESSIBLE RAMP. SEE DETAIL C3/A501 REMOVE CONC./AC PAVING AS REQUIRED – PATCH & MATCH FINISHES.

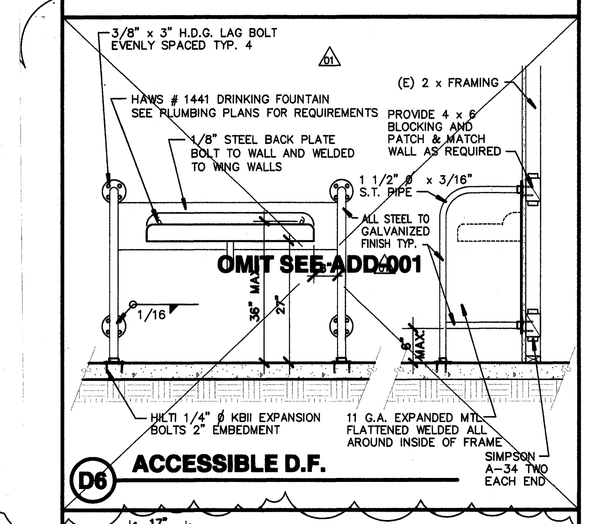

D6 ACCESSIBLE D.F.

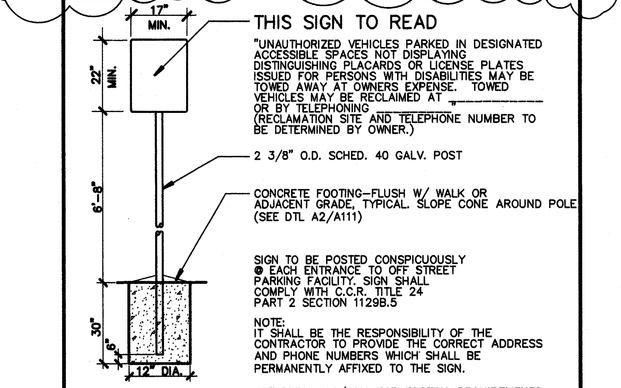

C6 SIGNAGE

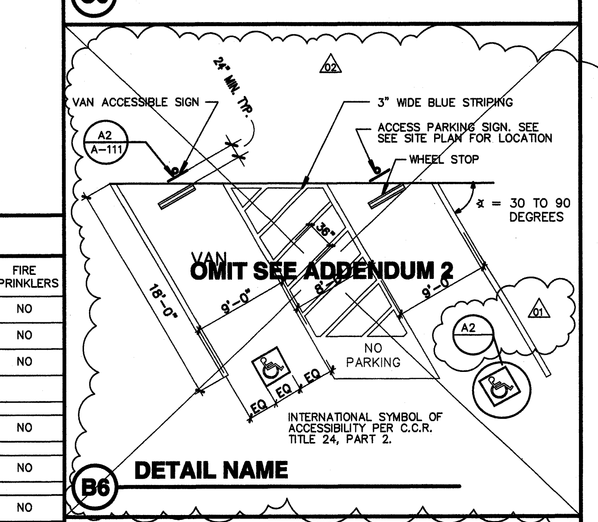

B6 DETAIL NAME

LEGEND

- BUILDINGS INCLUDED IN MODERNIZATION
- (E) ACCESSIBLE TOILET ROOMS REMODELED UNDER APP#69136 SEE 1/8" PLAN FOR ADDITIONAL WORK (WHERE OCCURS)
- NEW CONCRETE WALK
- RELOCATABLE CLASSROOMS AND NON DSA BUILDINGS NOT IN CONTRACT
- (E) CONC. WALK
- ASSUMED PROPERTY LINE
- ACCESSIBLE PATH OF TRAVEL
- EMERGENCY VEHICLE ACCESS

ORDIZ MELBY ARCHITECTS, INC.
5500 MING AVENUE SUITE 280
BAKERSFIELD, CALIFORNIA 93309
TELEPHONE (661) 832-5258
FACSIMILE (661) 832-4291

LICENSED ARCHITECT WILLIAM JOHN MELBY No. C-16835 DECD. 31 2007 RENEWAL DATE STATE OF CALIFORNIA

DANNY E. ORDIZ, AIA ARCHITECT, C-14,728
WILLIAM J. MELBY, AIA ARCHITECT C-16,835

CONSULTANT

IDENTIFICATION STAMP
DIVISION OF STATE ARCHITECT
OFFICE OF REGULATION SERVICES

APPL. 03-107003
FILE # 15-6

AC _____ FLS _____ SS _____
DATE _____

MODERNIZATION AT CURRAN MIDDLE SCHOOL FOR:

BAKERSFIELD CITY SCHOOL DISTRICT

1116 LYMRIC WAY
BAKERSFIELD
CALIFORNIA
93309

BUILDING KEY PLAN

MARK	DATE	DESCRIPTION
SD		
CD		
01	08/23/07	ADDENDUM 1
02	09/11/07	ADDENDUM 2
03	11/01/07	ADDENDUM 3

JOB NUMBER: 2002480
CAD DRAWING FILE: 9:00 AM
DRAWN BY: TT
CHECKED BY: MKB
CHECK AND VERIFY ALL DIMENSIONS BEFORE PROCEEDING WITH THE WORK. REPORT DESCREPANCIES TO THE ARCHITECT.

THE DRAWINGS, IDEAS, AND DESIGNS REPRESENTED ON THIS SHEET ARE THE PROPERTY OF THE ARCHITECT.
COPYRIGHT ORDIZ-MELBY ARCHITECTS, INC. 2002

SHEET TITLE
SITE PLAN

SHEET IDENTIFICATION NUMBER
ADD-A-111
SHEET 02 OF 46

PLOT TIME: 9:00 AM
PLOT DATE: 12-17-2007
PLOT NAME: 1-1.DWG
PLOT SCALE: 1" = 40'