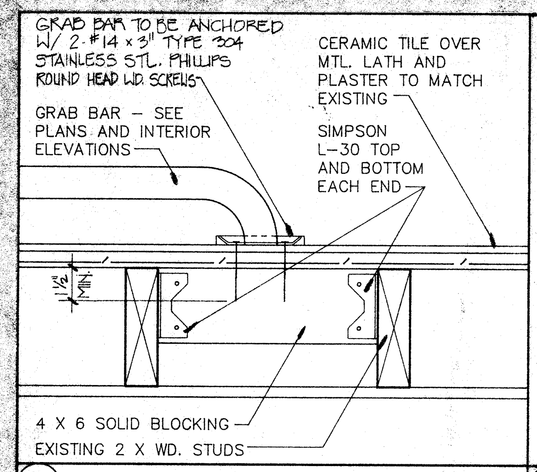

1 GRAB BAR DETAIL 3"

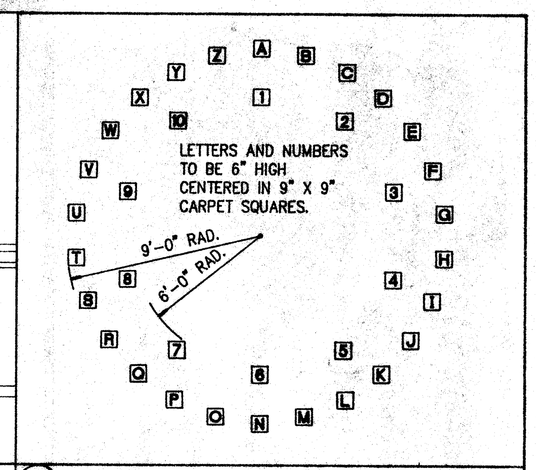

2 CARPET PATTERN 1/4"

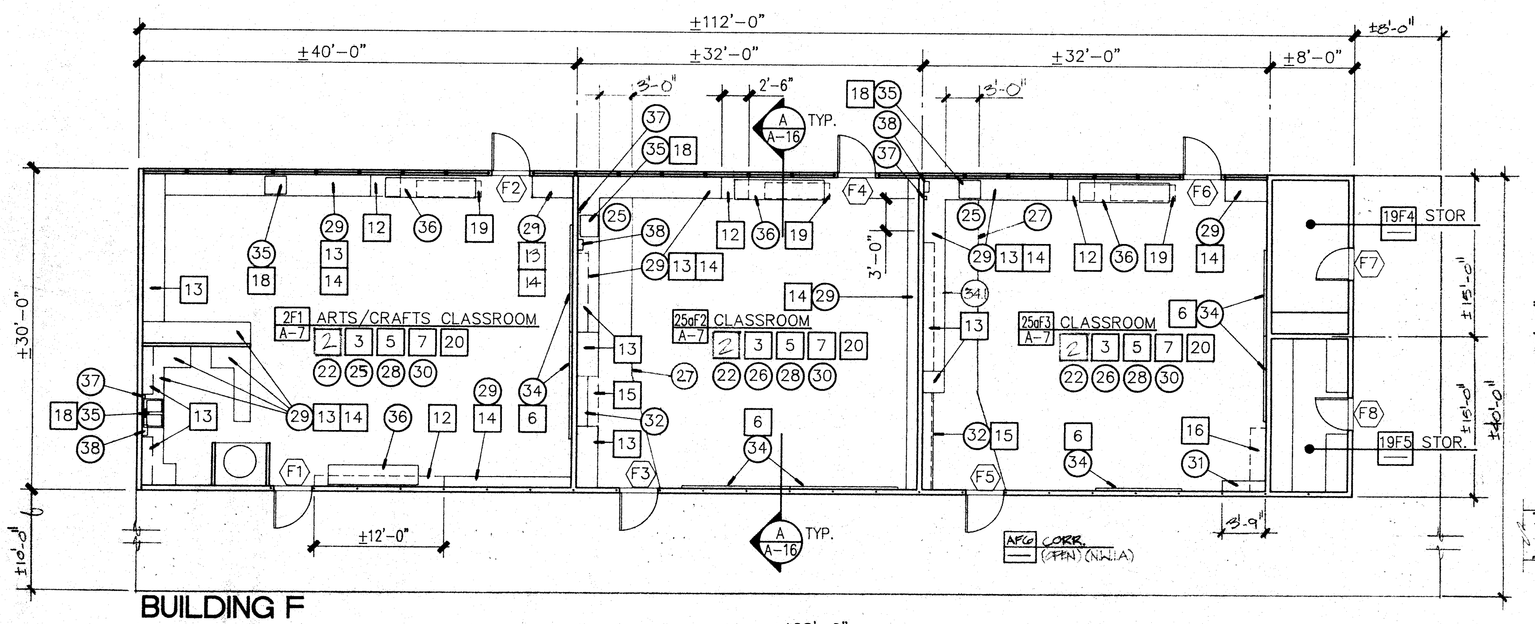

BUILDING F

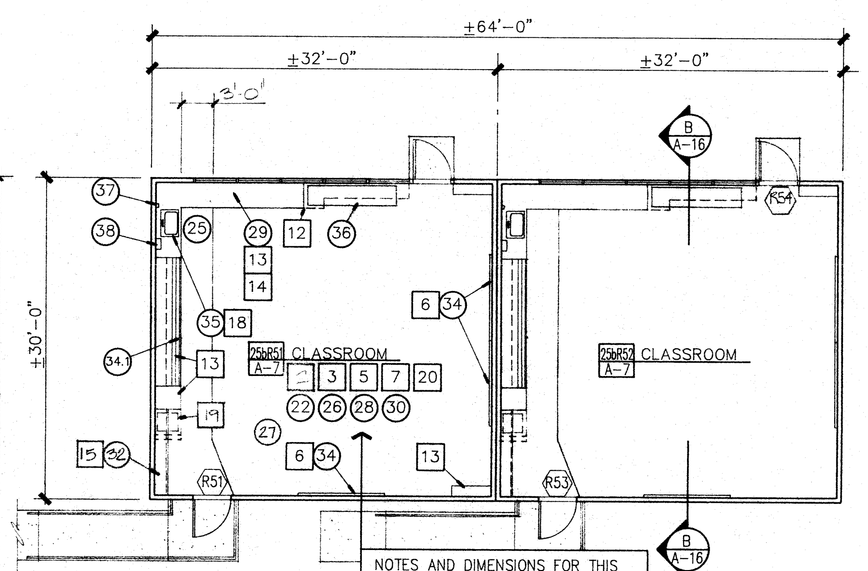

BUILDING R-5

NOTES AND DIMENSIONS FOR THIS CLASSROOM ARE TYPICAL FOR EACH CLASSROOM IN THIS BUILDING UNLESS NOTED OTHERWISE.

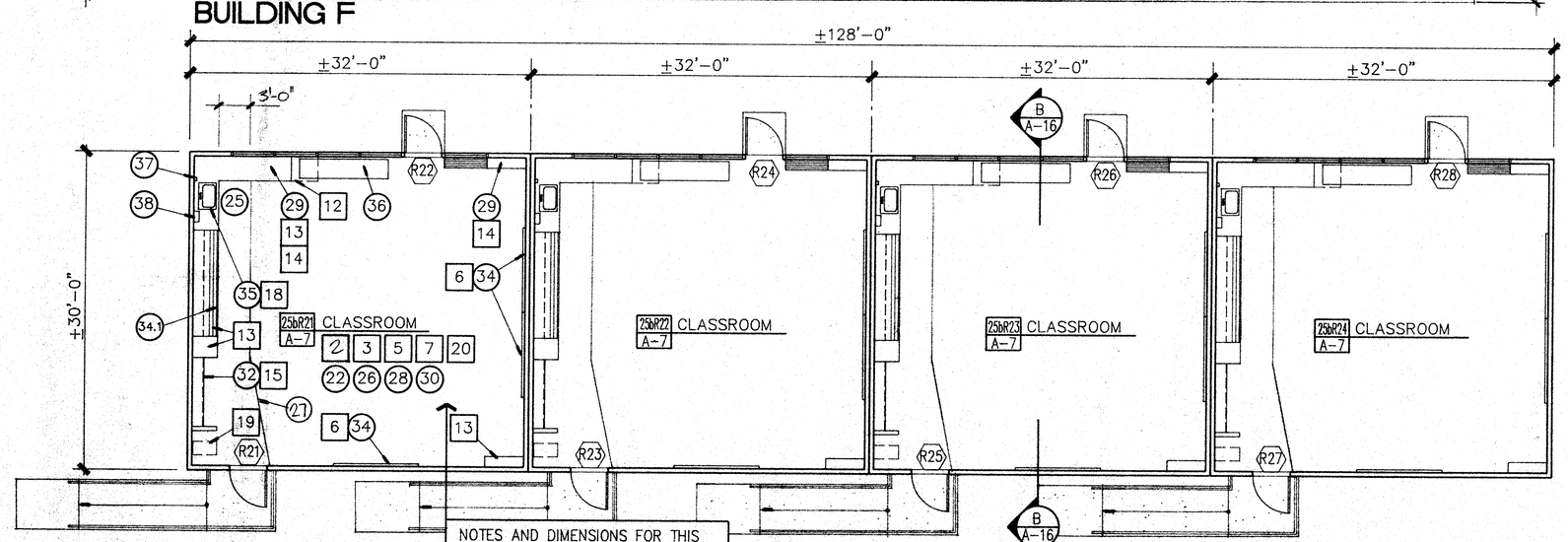

BUILDING R-2

NOTES AND DIMENSIONS FOR THIS CLASSROOM ARE TYPICAL FOR EACH CLASSROOM IN THIS BUILDING UNLESS NOTED OTHERWISE.

FLOOR PLANS

1/8"

N

DEMOLITION PLAN NOTES

ALL NOTES IN THIS COLUMN ARE TO BE USED FOR DRAWINGS ON THIS SHEET ONLY. NOTES LISTED IN THIS COLUMN WHICH ARE NOT INDICATED ON THE DRAWING SHALL BE DISREGARDED.

1. REMOVE EXISTING FINISH FLOOR MATERIAL.
2. REMOVE (S) WALL-MOUNTED CLOCKS, FLAG HOLDERS, PENCIL SHARPENERS, PROJECTION SCREENS, SPEAKERS & OTHER SIM. WALL-MOUNTED EQUIPMENT THAT WILL INTERFERE WITH THE INSTALLATION OF WALL ANCHOR, CLG FASHES, FIREWALL & LOCATE (2) WALL-MOUNTED EQUIPMENT PER OWNER'S REPRESENTATIVE.
3. REMOVE EXISTING FLOOR BASE.
4. REMOVE EXISTING CERAMIC TILE FLOORING.
5. REMOVE EXISTING TRIM, MOULDINGS & OTHER SIM. ITEMS IN THIS ROOM THAT WILL INTERFERE WITH THE INSTALLATION OF WALL FINISHES.
6. REMOVE EXISTING CHALKBOARDS.
7. REMOVE EXISTING TACK BOARDS.
8. REMOVE EXISTING WALL.
9. REMOVE EXISTING DOOR, HARDWARE AND FRAME.
10. REMOVE EXISTING DOOR AND HARDWARE.
11. REMOVE PORTION OF EXISTING WALL FOR WINDOW (REFER TO INTERIOR ELEVATION).
12. REMOVE PORTION OF EXISTING CABINET.
13. REMOVE EXISTING CABINET HARDWARE AND DOORS.
14. REMOVE EXISTING COUNTERTOPS AND SPLASHES.
15. REMOVE EXISTING SHELF, COAT HOOKS, AND SUPPORTING BRACKETS.
16. REMOVE EXISTING BOOKCASE.
17. REMOVE EXISTING CABINET.
18. REMOVE EXISTING SINK (REFER TO PLUMBING PLANS
19. REMOVE EXISTING UNIT HEATER (REFER TO MECH. PLANS) REMOVE (S) HEATER THERMOSTAT & FRAMING THRU DOORS
20. REMOVE EXISTING PAPER TOWEL DISPENSERS, SOAP DISPENSERS AND MIRRORS WHERE THEY OCCUR.
21. REMOVE EXISTING PAPER ROLL DISPENSER BRACKET AND REINSTALL IN SAME LOCATION AFTER COUNTERTOP AND SPLASH ARE INSTALLED.

FLOOR PLAN NOTES

ALL NOTES IN THIS COLUMN ARE TO BE USED FOR DRAWINGS ON THIS SHEET ONLY. NOTES LISTED IN THIS COLUMN WHICH ARE NOT INDICATED ON THE DRAWING SHALL BE DISREGARDED.

22. PREPARE SUBFLOOR SURFACE TO ACCEPT FLOORING MATERIAL
23.
24. PATCH FLOOR WITH MATERIAL AND COLOR TO MATCH EXISTING.
25. PROVIDE AND INSTALL VINYL COMPOSITION TILE.
26. PROVIDE AND INSTALL CARPET.
27. PROVIDE AND INSTALL CARPET EDGE STRIP.
28. REPAIR, PATCH AND PREPARE WALL SURFACE TO ACCEPT FINISH WALL MATERIAL.
29. PROVIDE AND INSTALL LAM. PLAS. COVERED COUNTERTOPS AND SPLASHES (WHERE THEY OCCUR-REFER TO INT. ELEVATIONS)
30. ALL CABINETRY IN THIS ROOM IS EXISTING TO BE REPAIRED AND REFINISHED UNLESS NOTED OTHERWISE (REFER TO INTERIOR ELEVATIONS).
31. PROVIDE AND INSTALL LAMINATED PLASTIC COVERED BOOKCASE AND ADJUSTABLE SHELVES.
32. PROVIDE AND INSTALL SHELF, COAT HOOKS, AND SUPPORTING BRACKETS.
33. PROVIDE AND INSTALL UPPER BOOKCASE.
34. PROVIDE AND INSTALL CHALKBOARD (REFER TO INTERIOR ELEVATIONS).
34.1 PROVIDE AND INSTALL VINYL PLASTIC INPREGNATED CORK BOARD.
35. PROVIDE AND INSTALL SINK (REFER TO PLUMBING PLANS).
36. PROVIDE AND INSTALL UNIT VENTILATOR (REFER TO MECHANICAL PLANS).
36.1 PROVIDE AND INSTALL FAN COIL UNIT (REFER TO MECHANICAL PLANS).
37. PROVIDE AND INSTALL SOAP DISPENSER.
38. PROVIDE AND INSTALL PAPER TOWEL DISPENSER.
39. PROVIDE AND INSTALL MIRROR.
40. REFRIGERATOR SPACE

WALL LEGEND

- EXISTING WALL TO REMAIN
- EXISTING WALL TO BE REMOVED
- EXISTING WALL WITH WINDOWS TO REMAIN
- CONSTRUCT STUD WALL
- CONSTRUCT STUD WALL (PARTIAL HEIGHT)

OFFICE OF THE STATE ARCHITECT
ACCESS COMPLIANCE SECTION
51550 AUG 01 '89
APPLICATION FILE NO. AND SHEET NO.

STATE ARCHITECT
STRUCTURAL SECTION

IDENTIFICATION STAMP
Department of General Services
Office of the State Architect
DEC 1 3 1989
Structural Safety Section
Appl # 151550 NC/LA
Back-checked by

RRA
Architecture
Planning
Interior Design
Space Planning

Donald W. Renfro AIA C5283
Mark E. Russell AIA C13726
Carl G. Elliott AIA C7571
K. Bartram Huffman AIA C12061
Kenneth A. Kalla AIA C17760
Jeffrey P. Krausse AIA C16834
Tommy W. Preston AIA C12263
Larry G. Wiggins AIA C12514

Renfro-Russell & Associates, Inc.
4800 Stockdale Highway, Suite 304, Bakersfield, California 93309 (805) 327-7075

CONSULTANTS

PROJECT

BAKERSFIELD CITY SCHOOL DISTRICT

FREMONT ELEMENTARY SCHOOL MODERNIZATION

THE ABOVE DRAWINGS AND SPECIFICATIONS AND IDEAS, DESIGNS AND ARRANGEMENTS REPRESENTED THEREBY ARE AND SHALL REMAIN THE PROPERTY OF THE ARCHITECT, AND NO PART THEREOF SHALL BE COPIED, DISCLOSED TO OTHERS OR USED IN CONNECTION WITH ANY WORK OR PROJECT OTHER THAN THE SPECIFIC PROJECT FOR WHICH THEY HAVE BEEN PREPARED AND DEVELOPED WITHOUT THE WRITTEN CONSENT OF THE ARCHITECT. VISUAL CONTACT WITH THESE DRAWINGS AND SPECIFICATIONS SHALL CONSTITUTE CONCLUSIVE EVIDENCE OF ACCEPTANCE OF THESE RESTRICTIONS.

WRITTEN DIMENSIONS ON THESE DRAWINGS SHALL HAVE PRECEDENCE OVER SCALED DIMENSIONS. CONTRACTORS SHALL VERIFY AND BE RESPONSIBLE FOR ALL DIMENSIONS AND CONDITIONS ON THE JOB AND THIS OFFICE MUST BE NOTIFIED OF ANY VARIATIONS FROM THE DIMENSIONS AND CONDITIONS SHOWN BY THESE DRAWINGS. SHOP DETAILS MUST BE SUBMITTED TO THIS OFFICE FOR APPROVAL BEFORE PROCEEDING WITH FABRICATION.

KEY PLAN

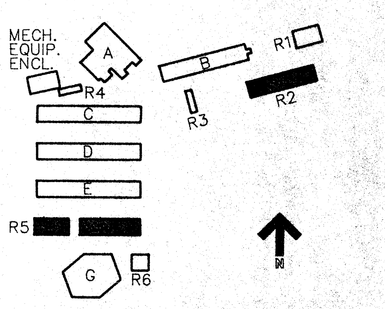

BAKERSFIELD CITY SCHOOL DISTRICT
BOARD OF EDUCATION

DATE	APPROVED

DATE	ISSUED FOR
9-3-91	BIDDING

DATE	REVISIONS
8-16-89	1 O.L.A. DIMN. REQUEST.
	2
	3
	4

SHEET TITLE

FLOOR PLANS
BUILDINGS F,R2,R5

APPROVED/ARCHITECT Tommy W. Preston
CHECKED TWP DATE 8-1-89
DRAWN BY CDP PROJECT NO. 86-216FM

SHEET NUMBER 86216CA22096

A-4

OF 19 SHEETS